VELUX®

GPLS 3in1

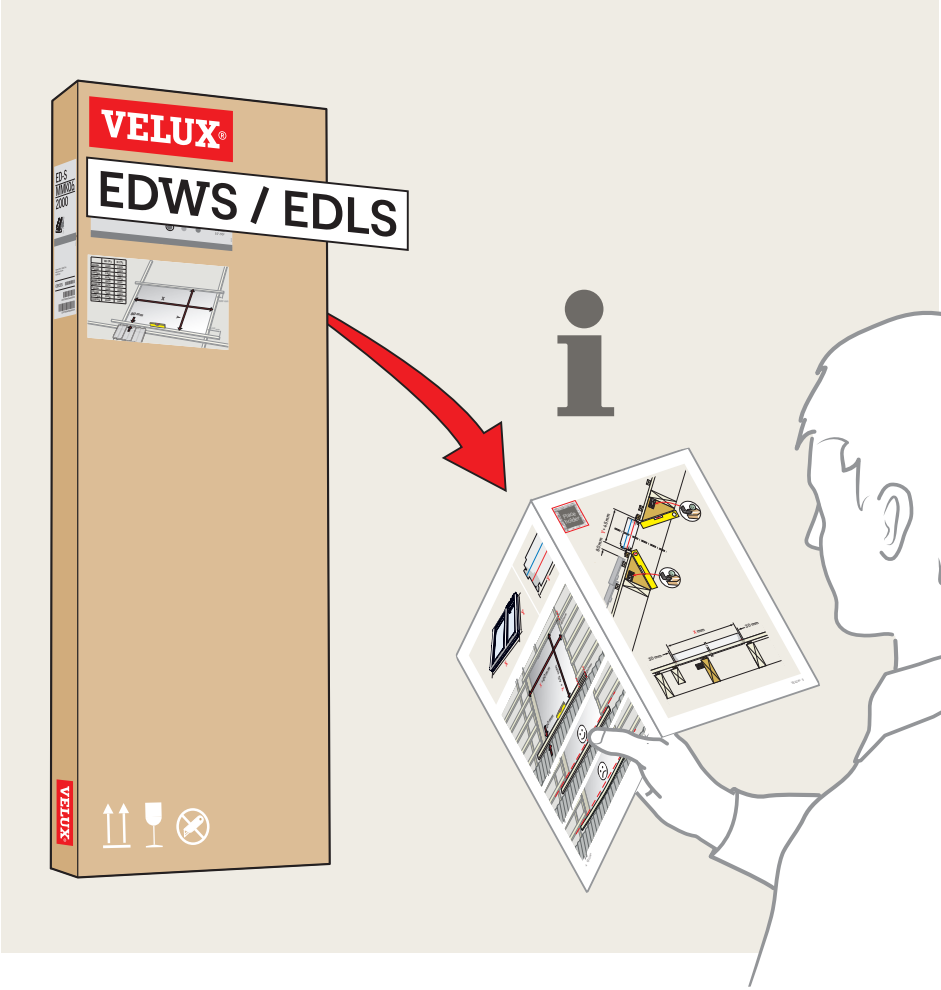

15°–55°

VAS 455109-2025-10

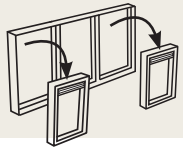

1

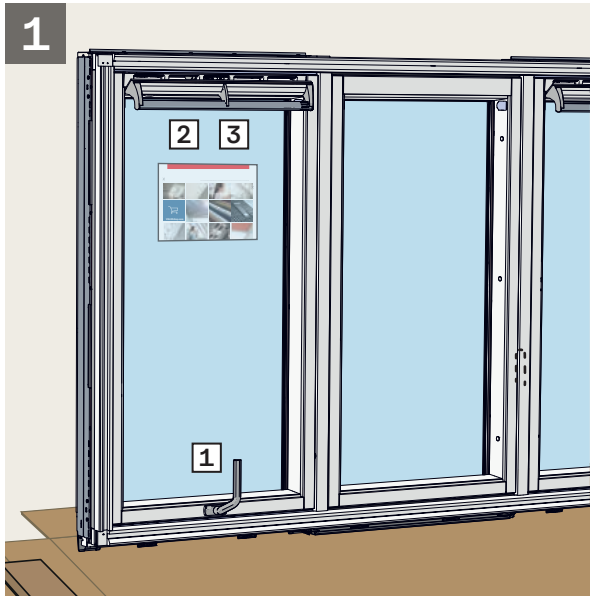

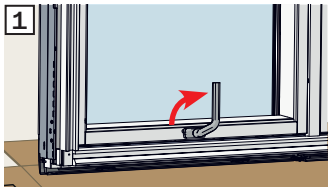

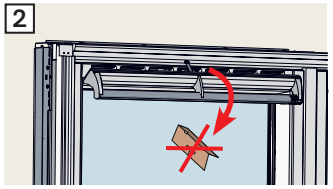

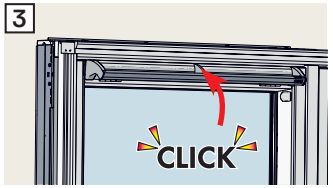

2

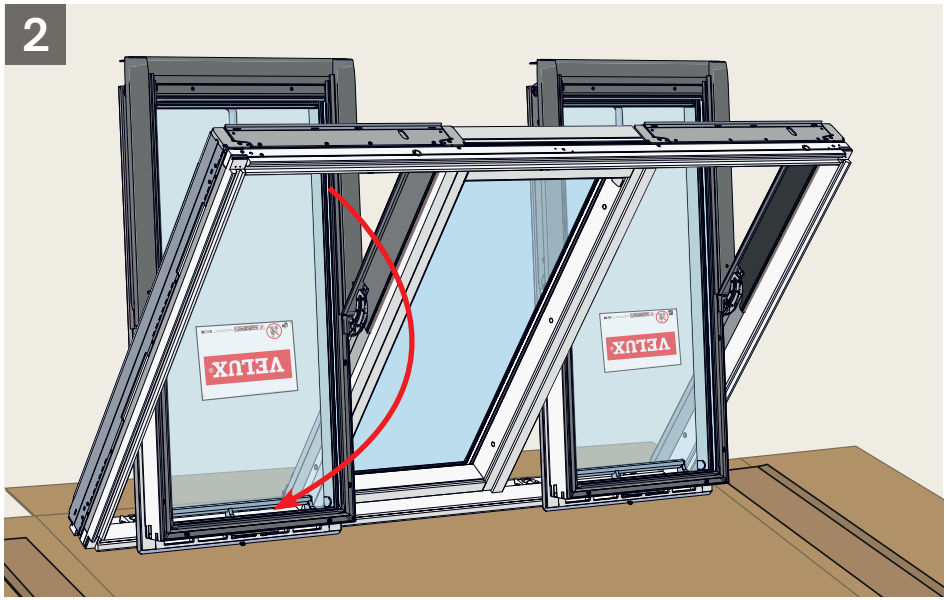

3

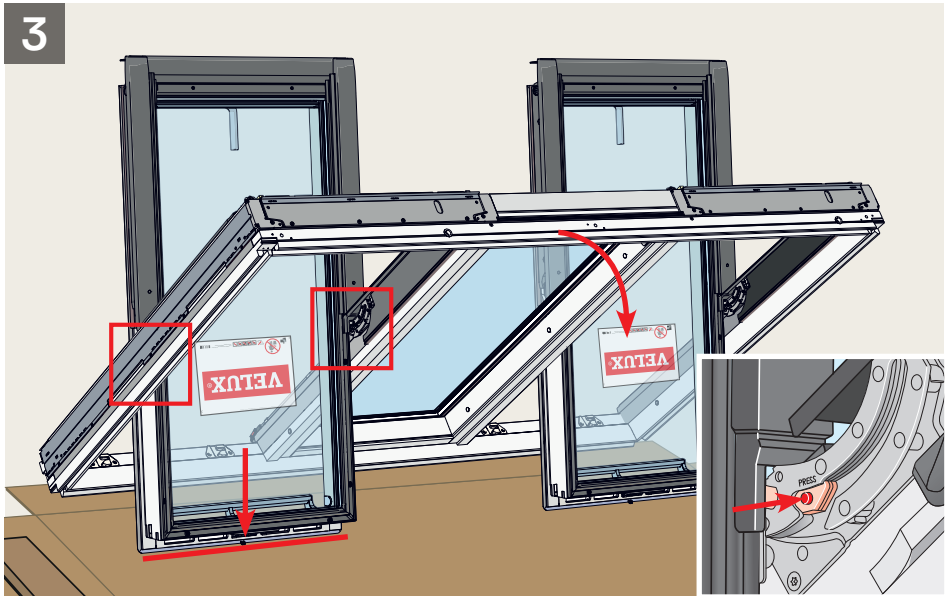

4

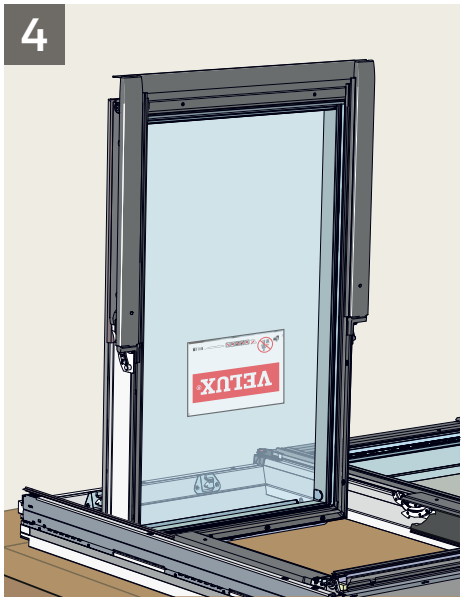

5

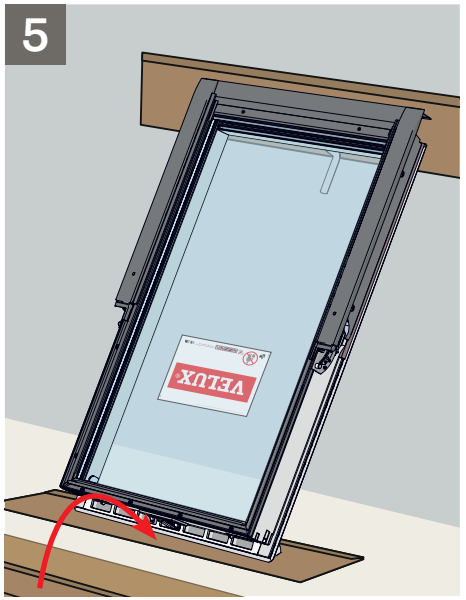

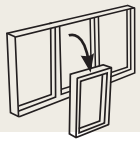

1

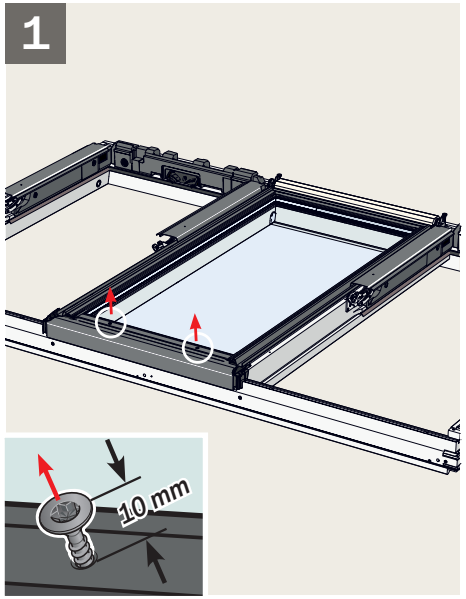

2

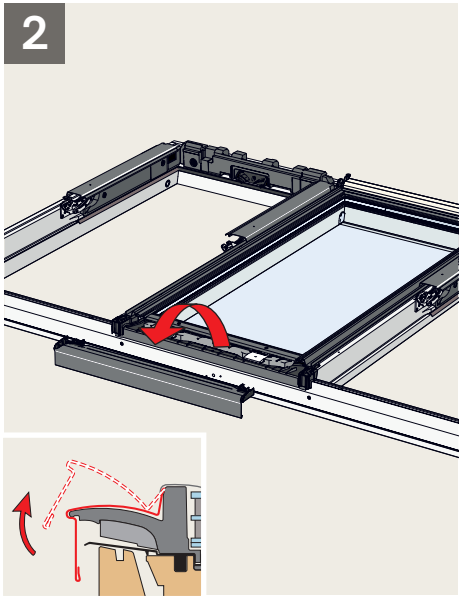

3

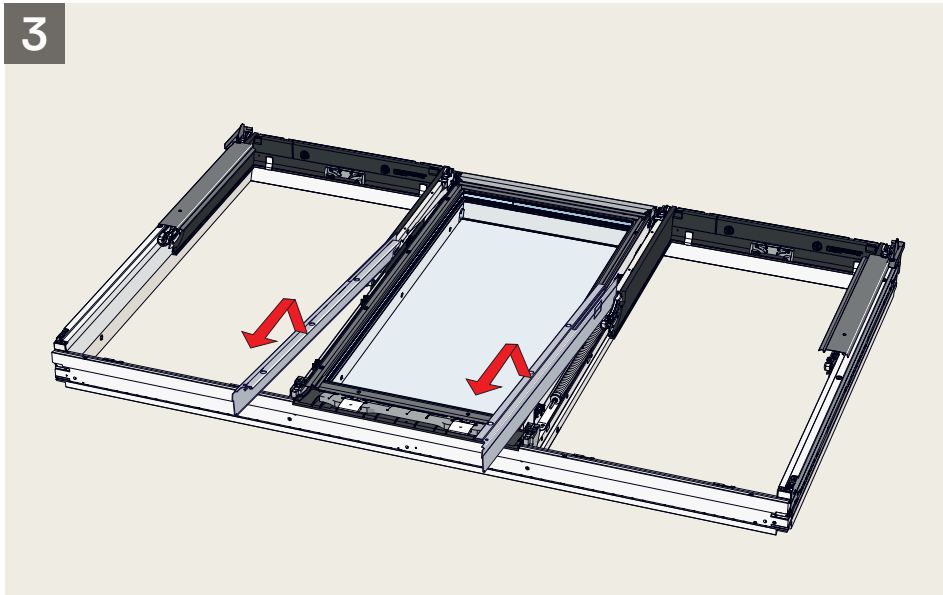

4

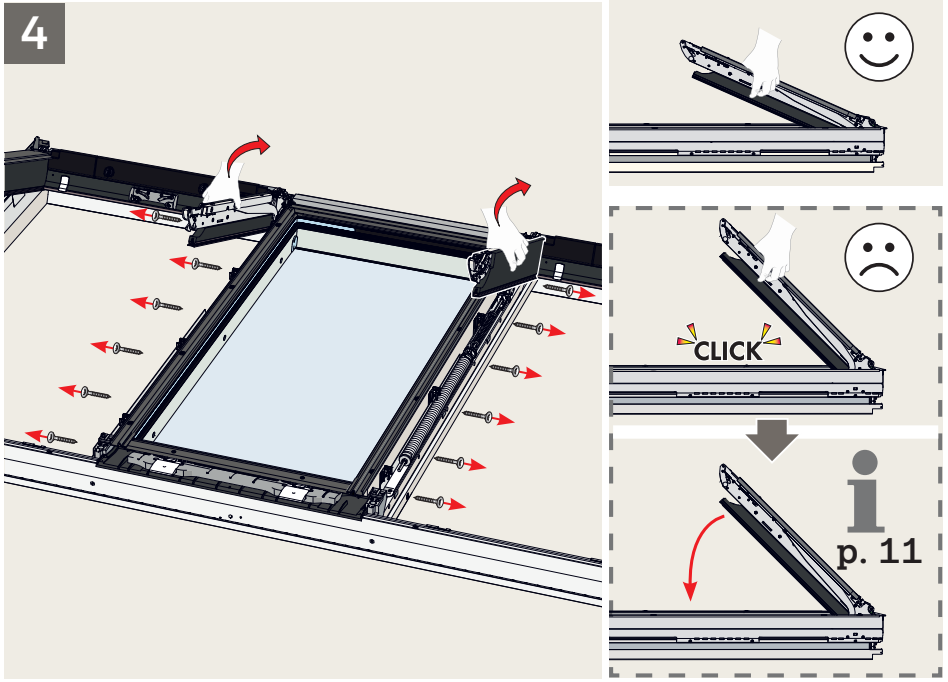

5

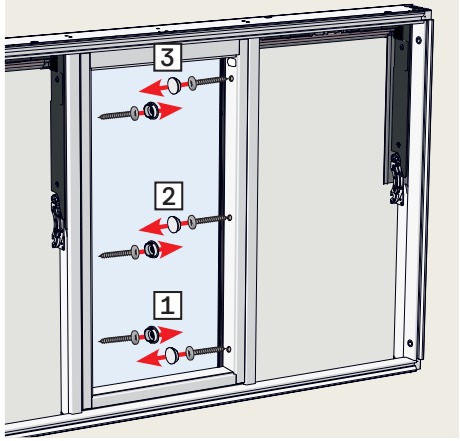

6

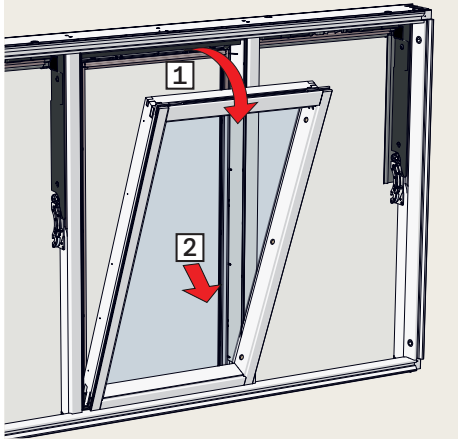

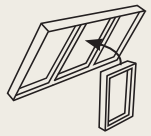

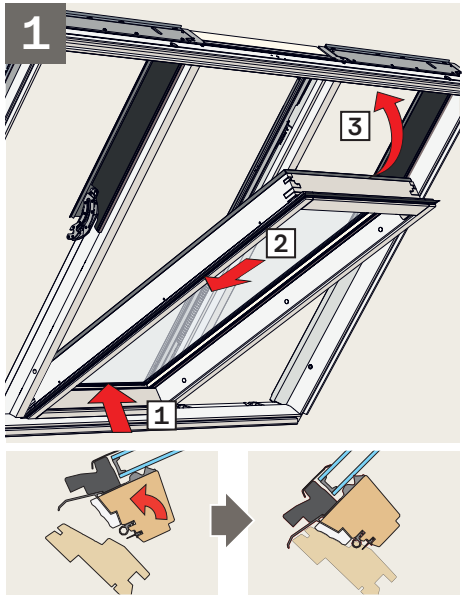
1
3
2
1

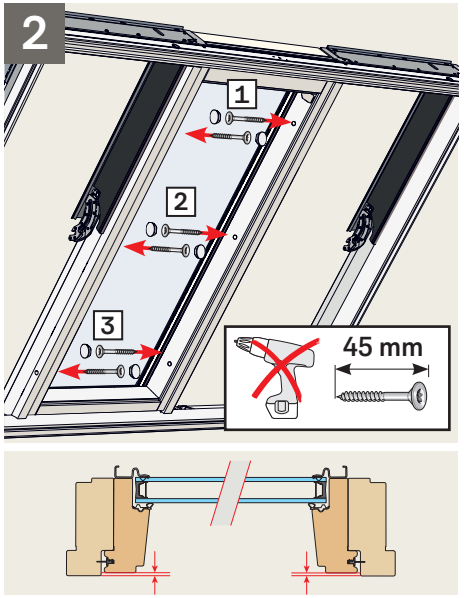
2
1
2
3
45 mm

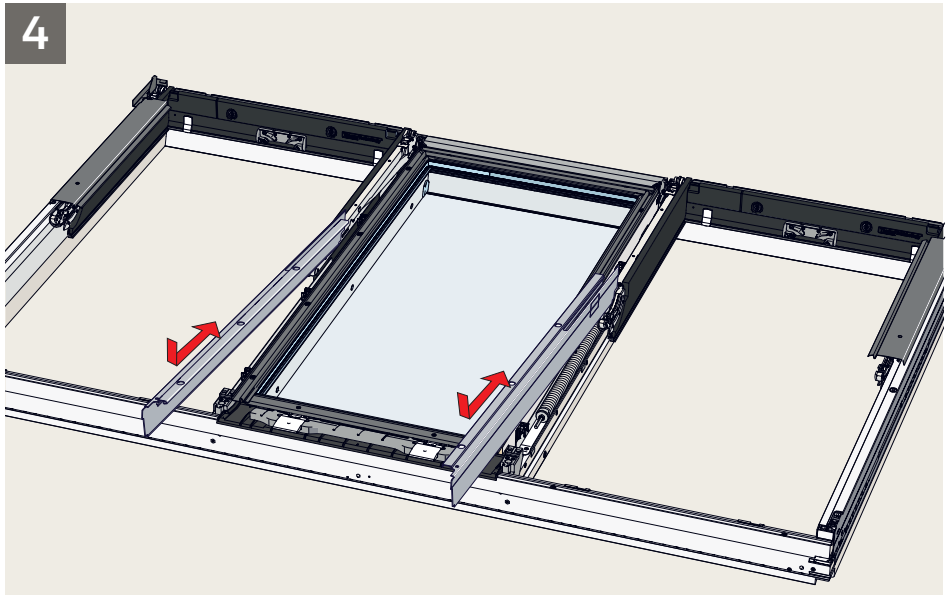
4

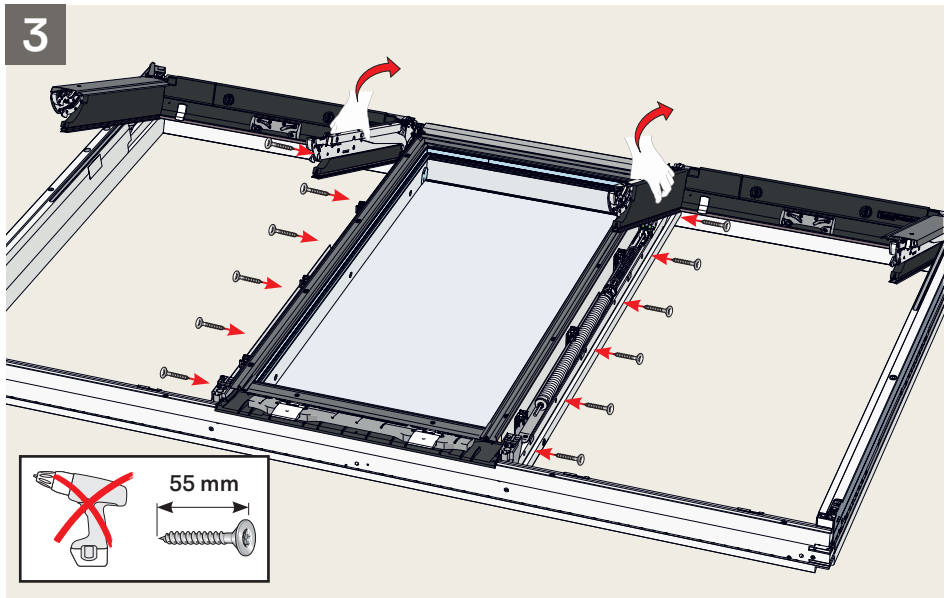
3
55 mm

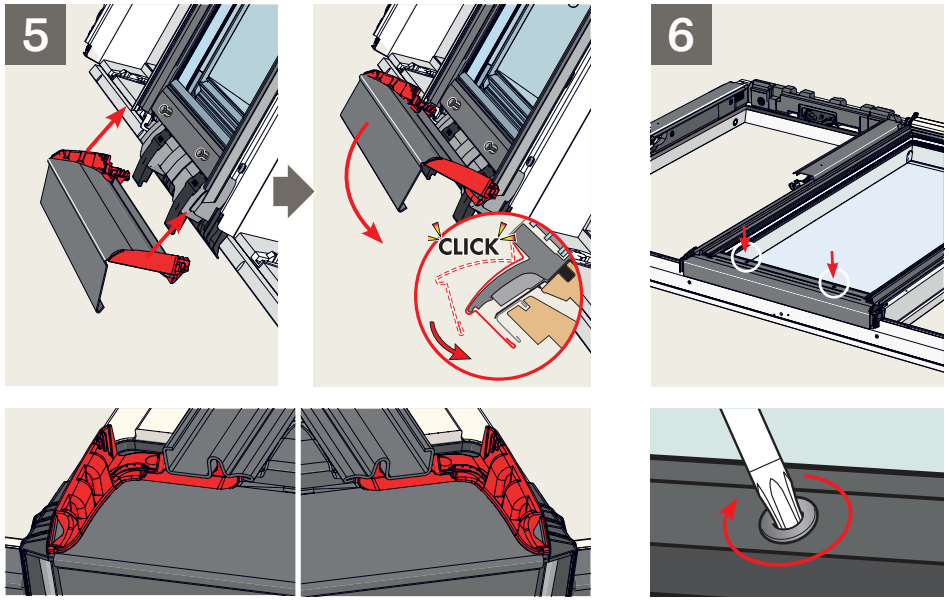
5
CLICK
6

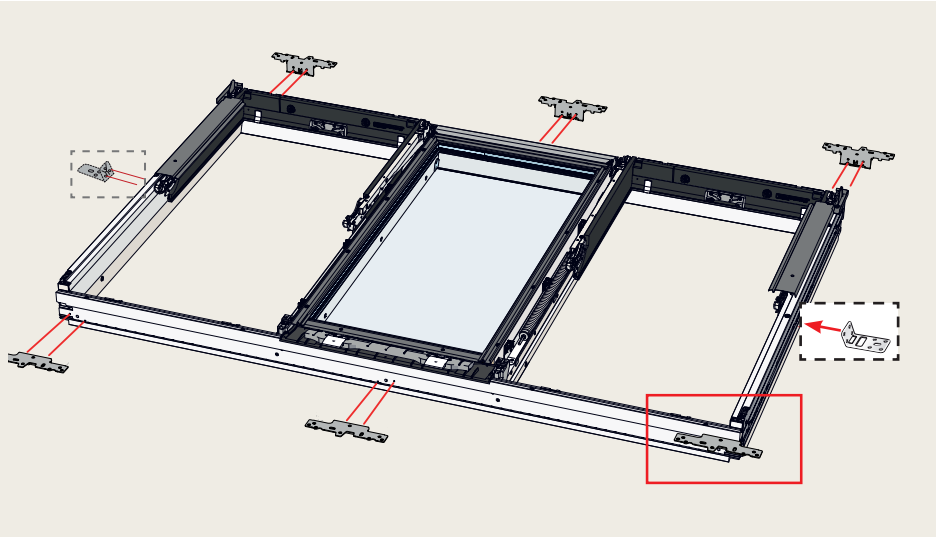

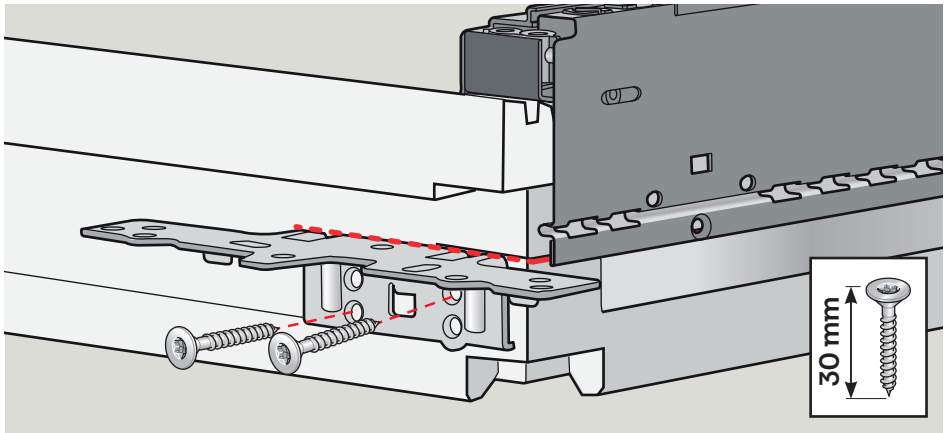

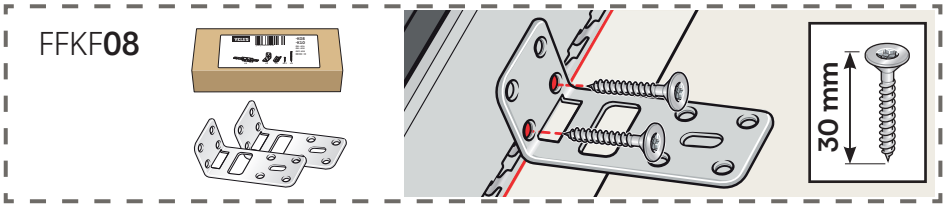

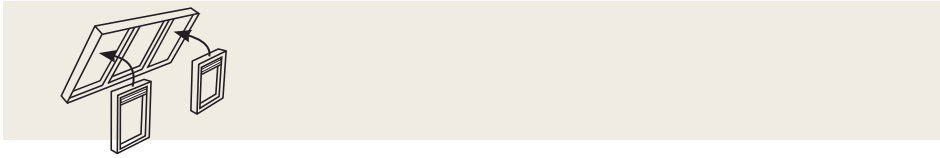

1

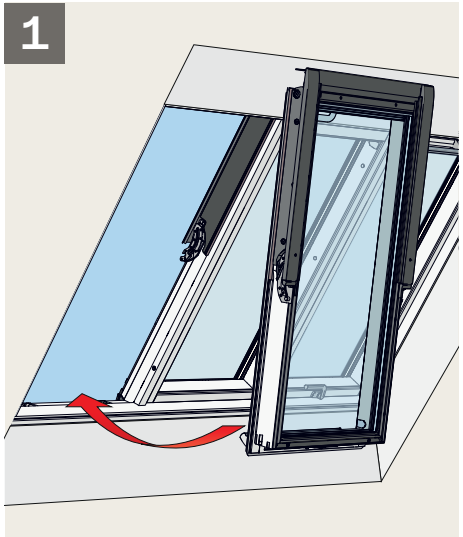

2

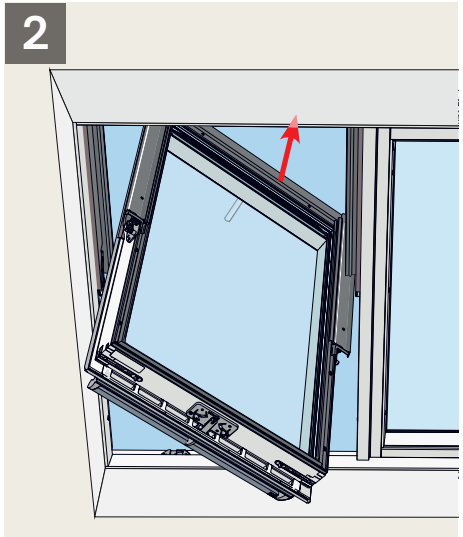

3

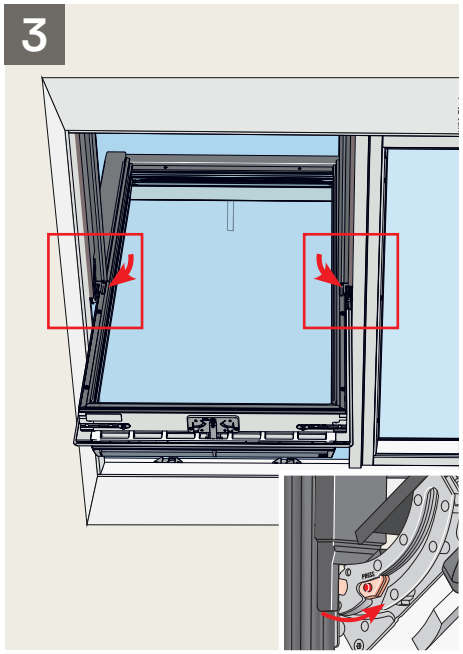

4

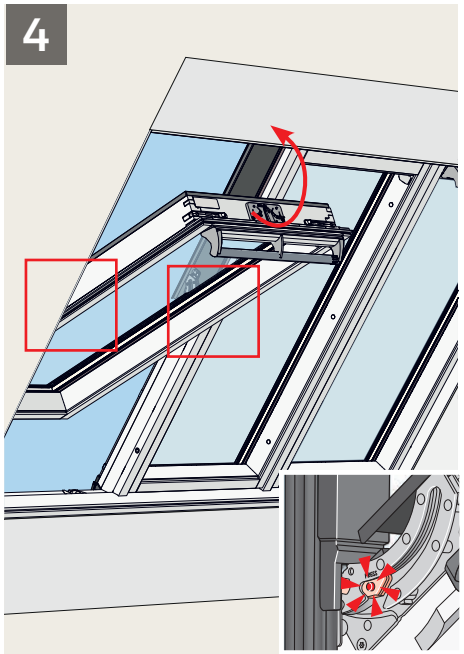

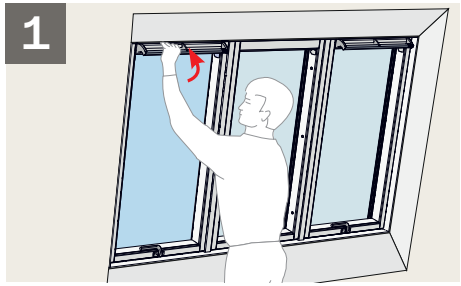
1

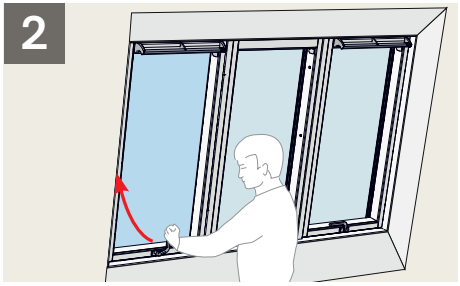
2

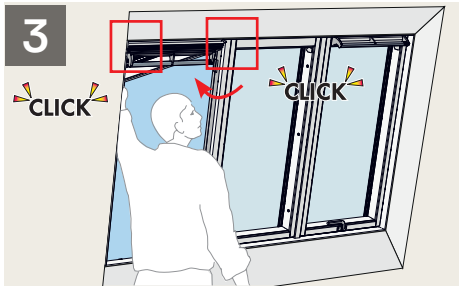
3
CLICK
CLICK

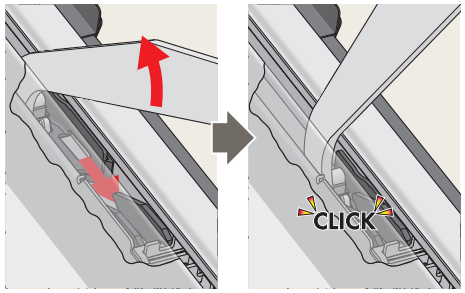
CLICK

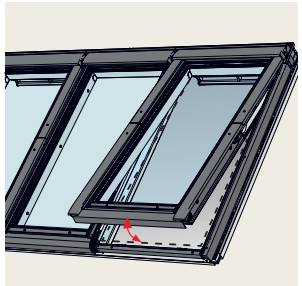

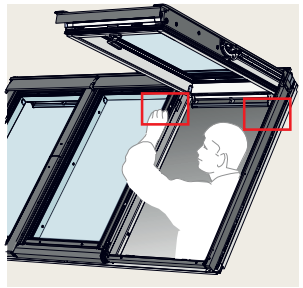

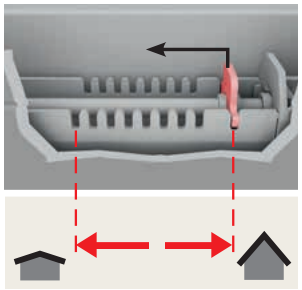

55°–75°
VELUX®

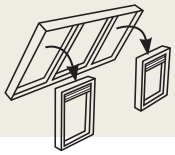

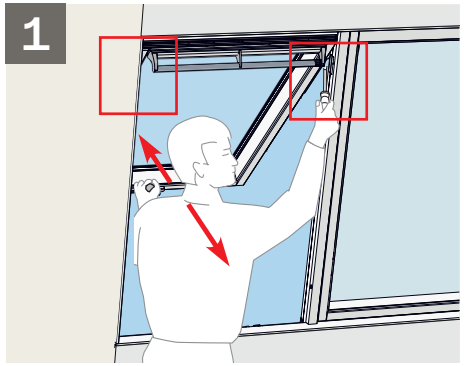
1

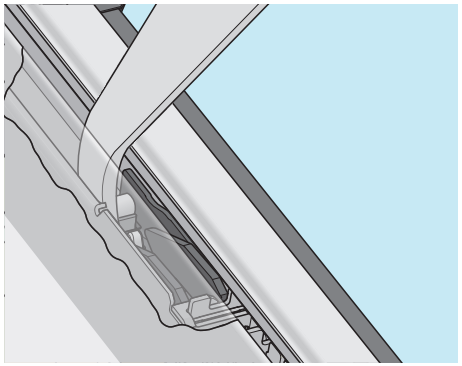

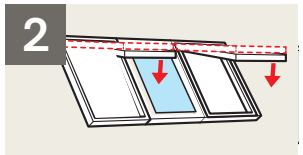
2

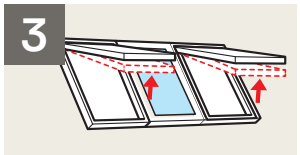
3

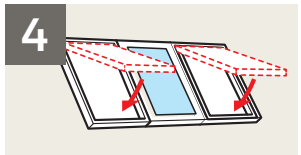
4

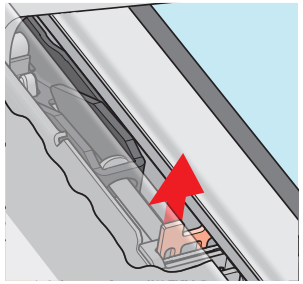

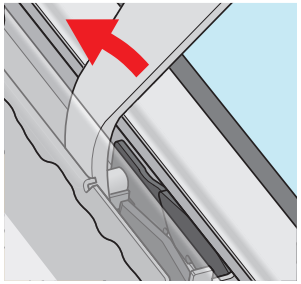

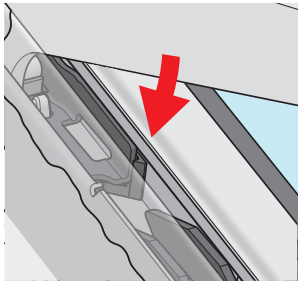

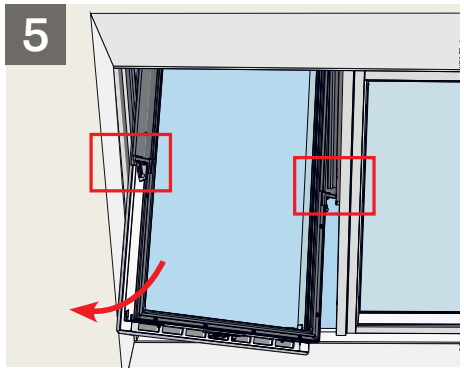
5

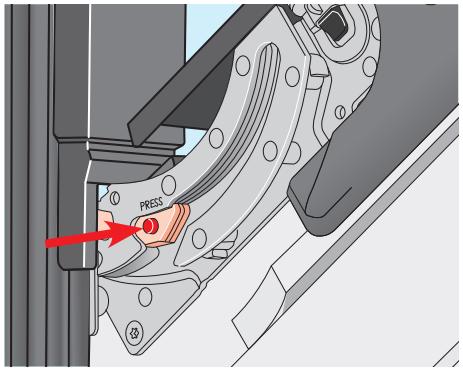
PRESS

VELUX®

www.velux.com

velux.com/contact

INSTALLATION INSTRUCTIONS FOR GPLS. ©2022, 2025 VELUX GROUP ®VELUX AND THE VELUX LOGO ARE REGISTERED TRADEMARKS USED UNDER LICENCE BY THE VELUX GROUP