VELUX®

GPLS 2in1

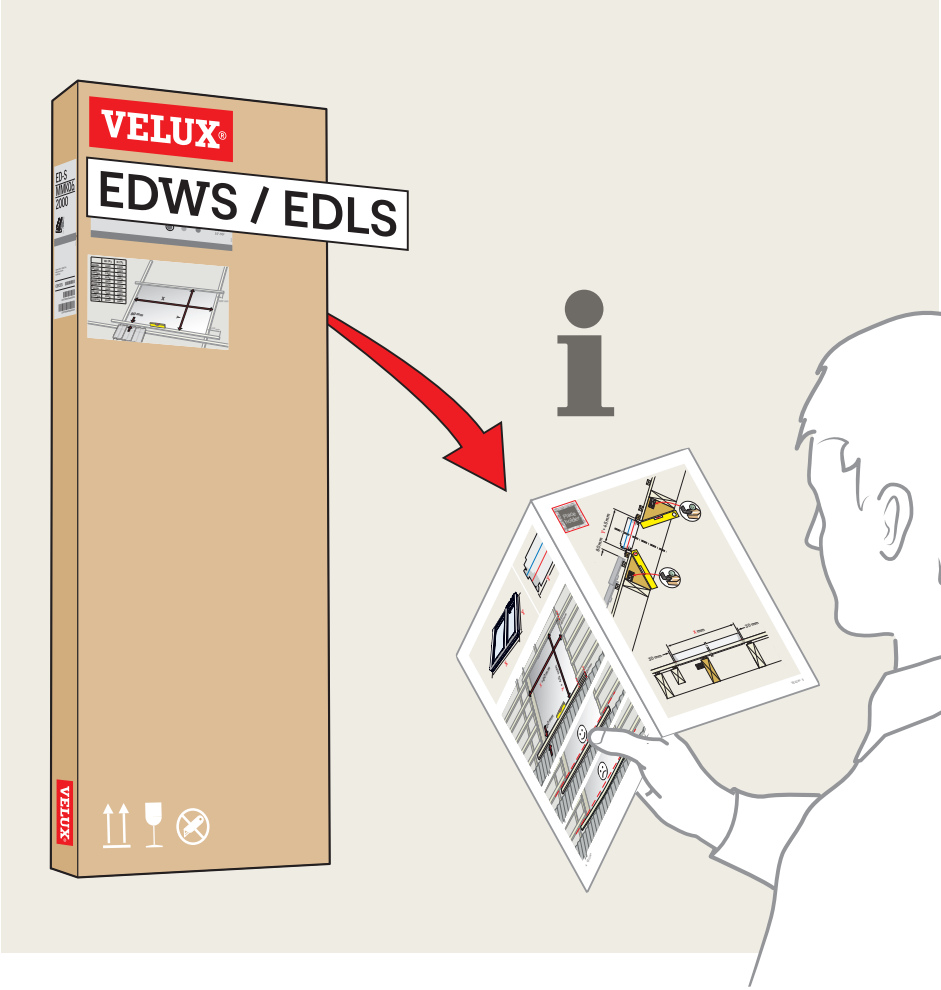

15°–55°

VAS 455108-2025-10

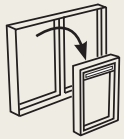

1

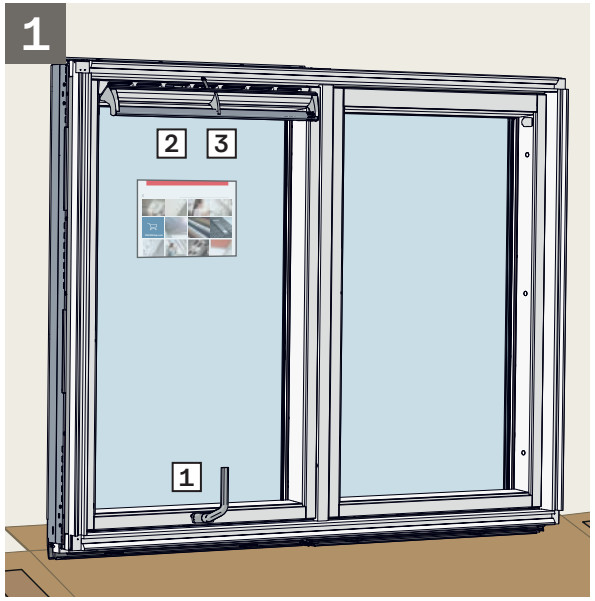

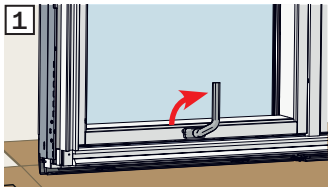

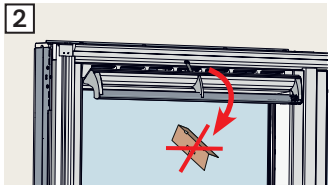

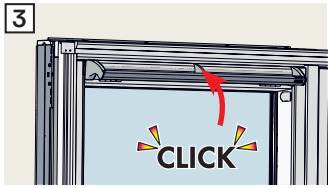

2

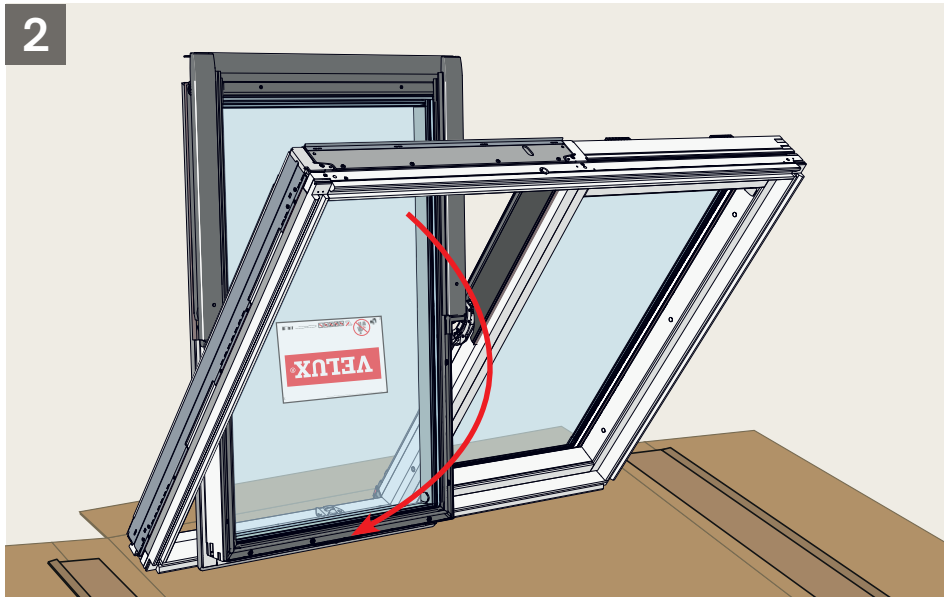

3

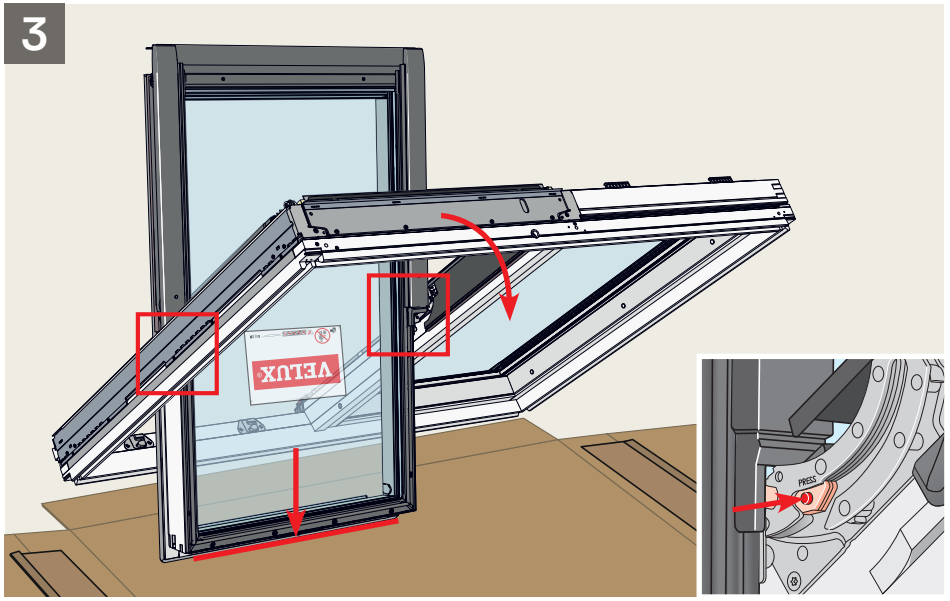

4

5

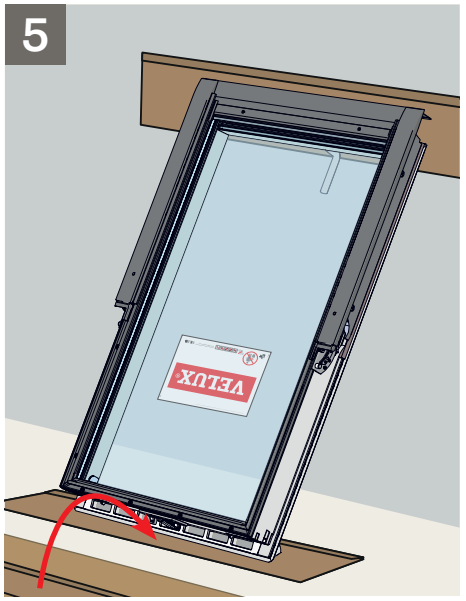

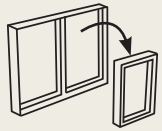

1

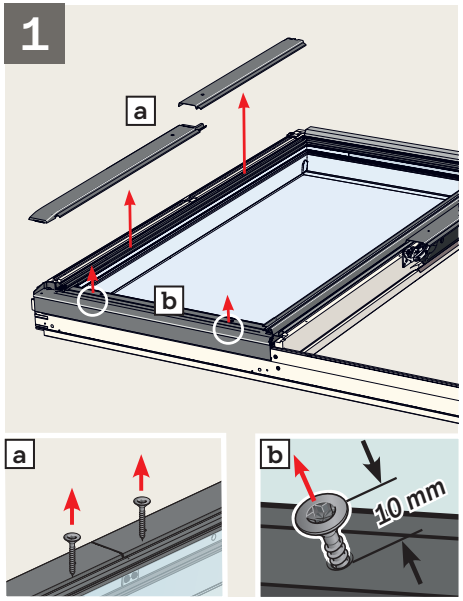

2

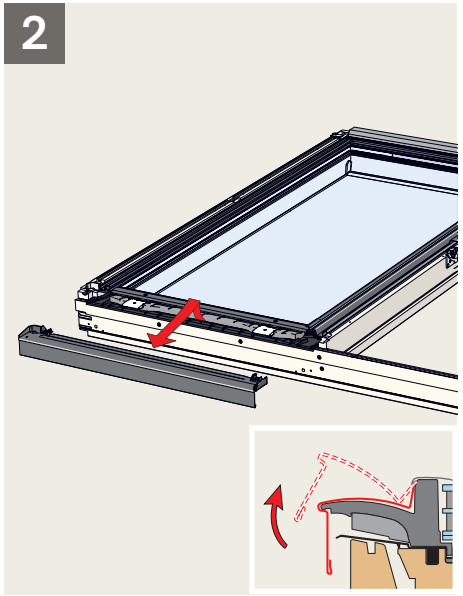

3

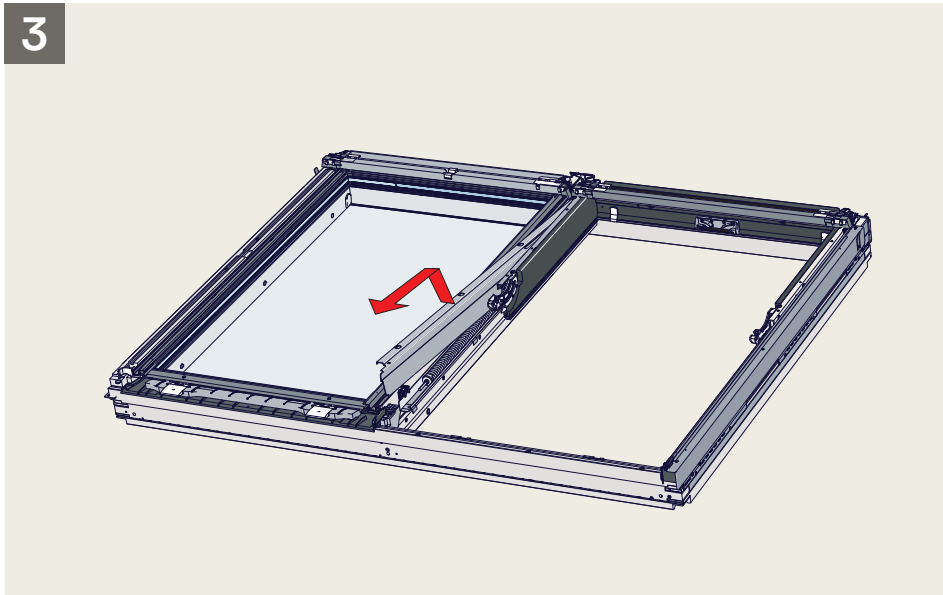

4

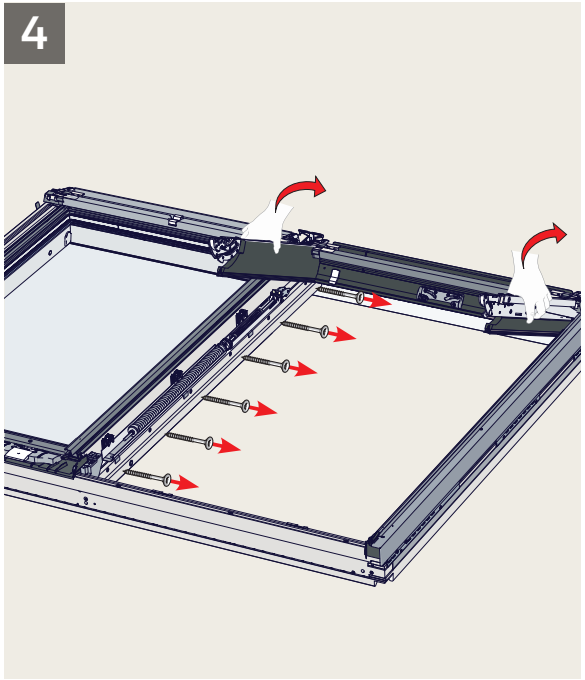

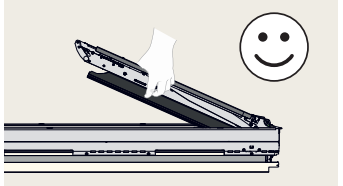

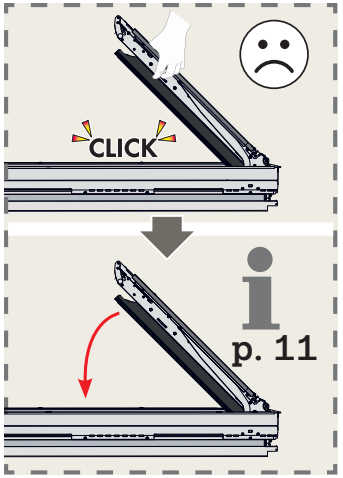

5

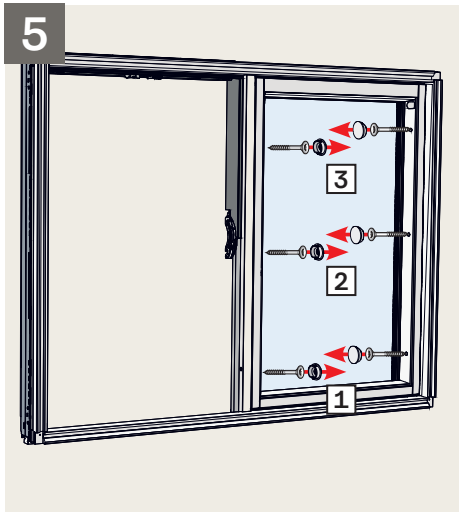

6

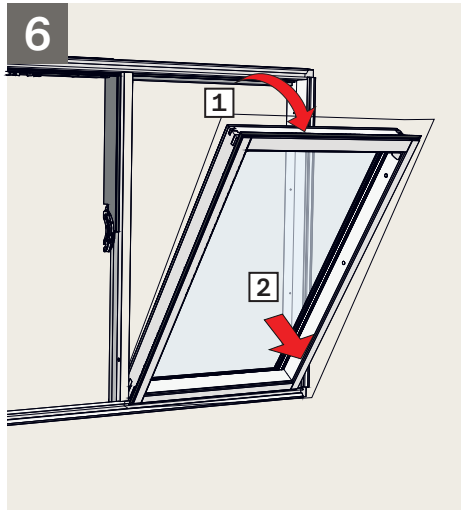

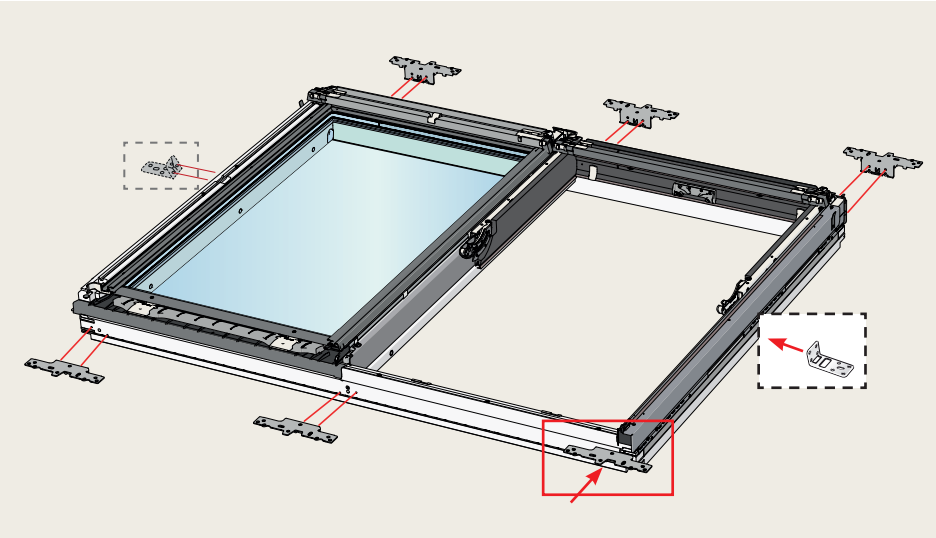

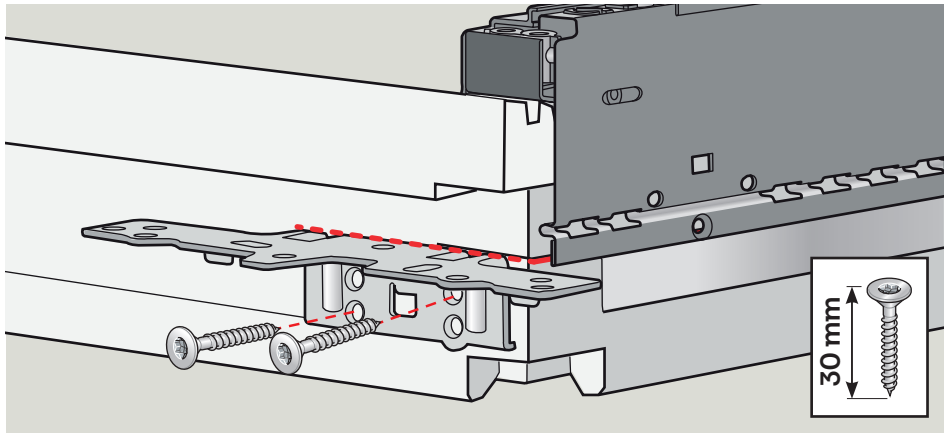

FFK08
FMK08
MMK08
FPK08

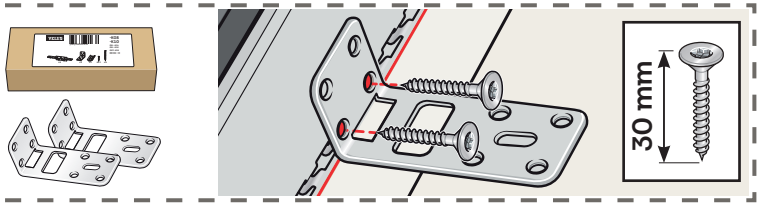

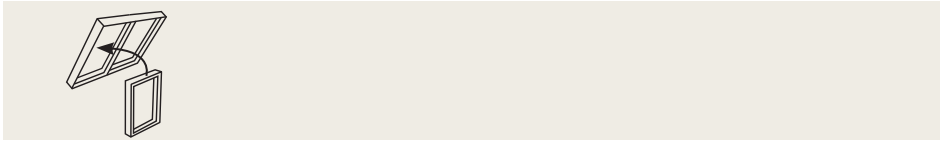

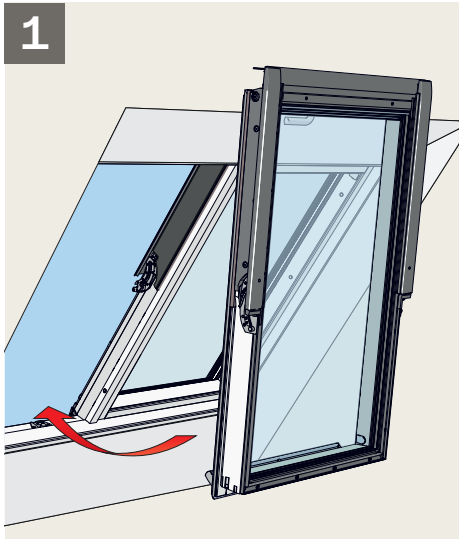

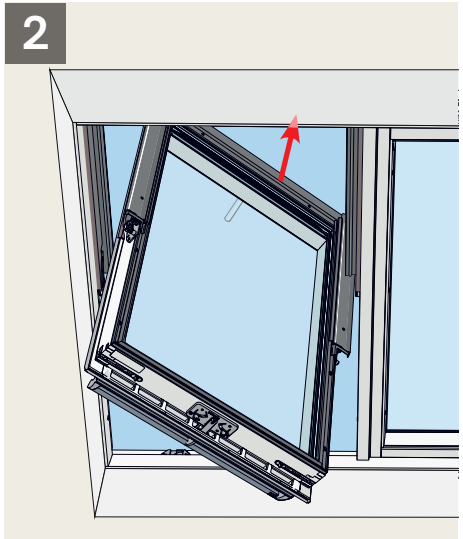

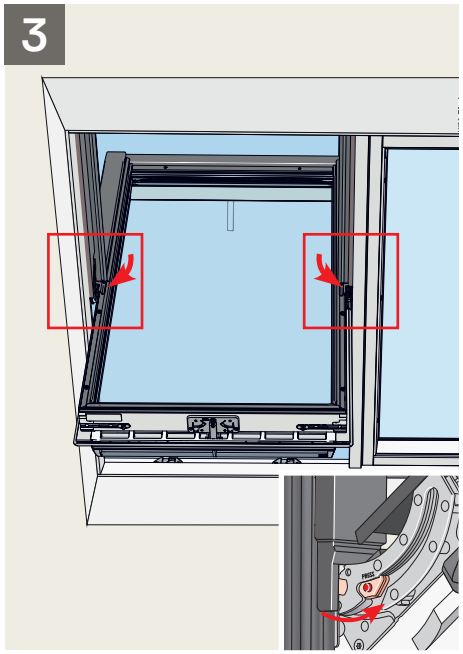

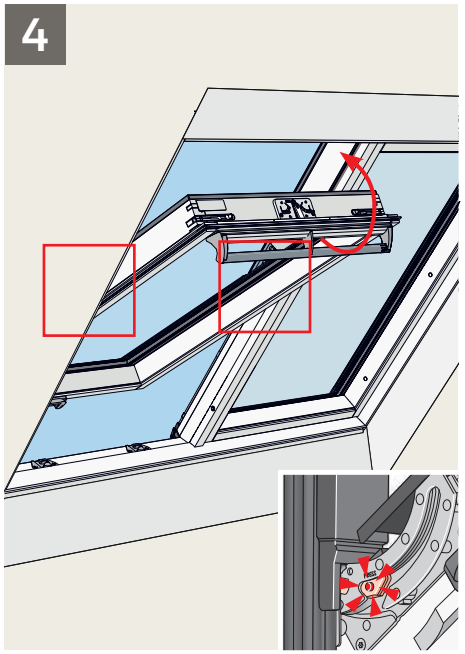

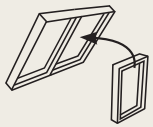

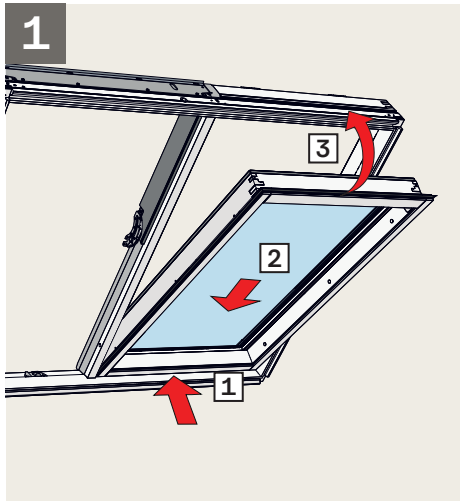
1
3
2
1

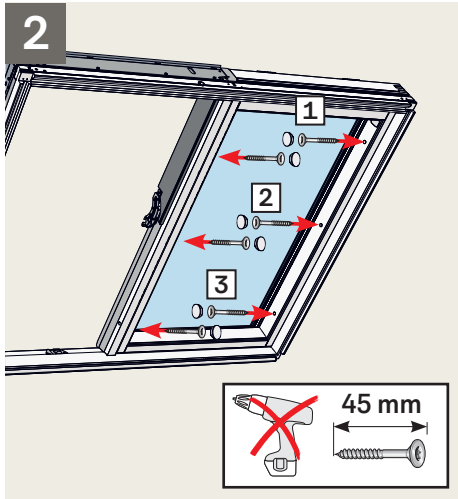
2
1
2
3
45 mm

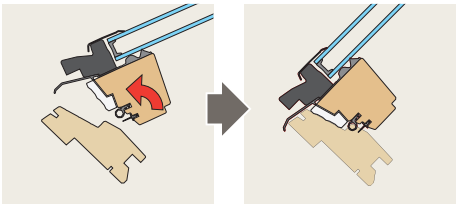

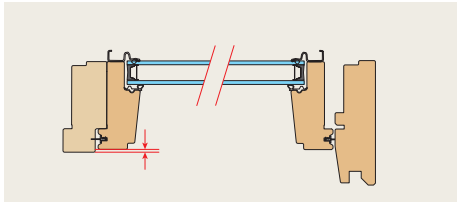

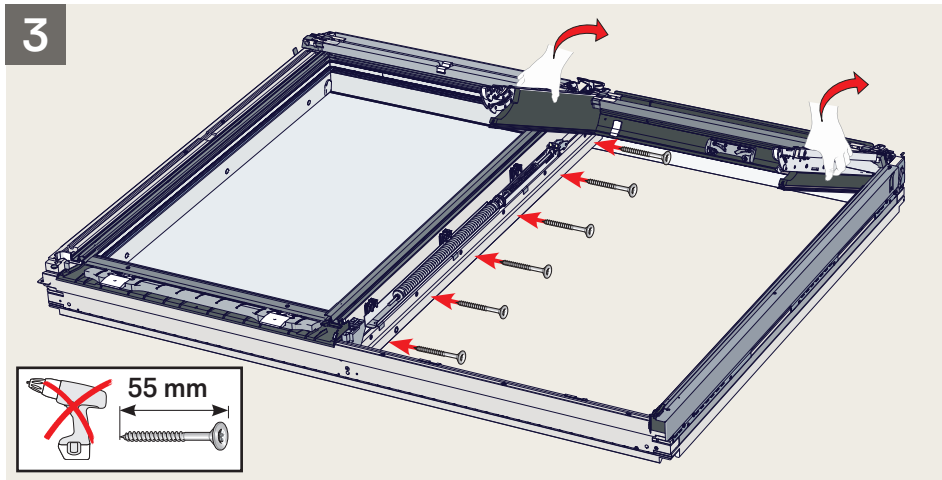
3
55 mm

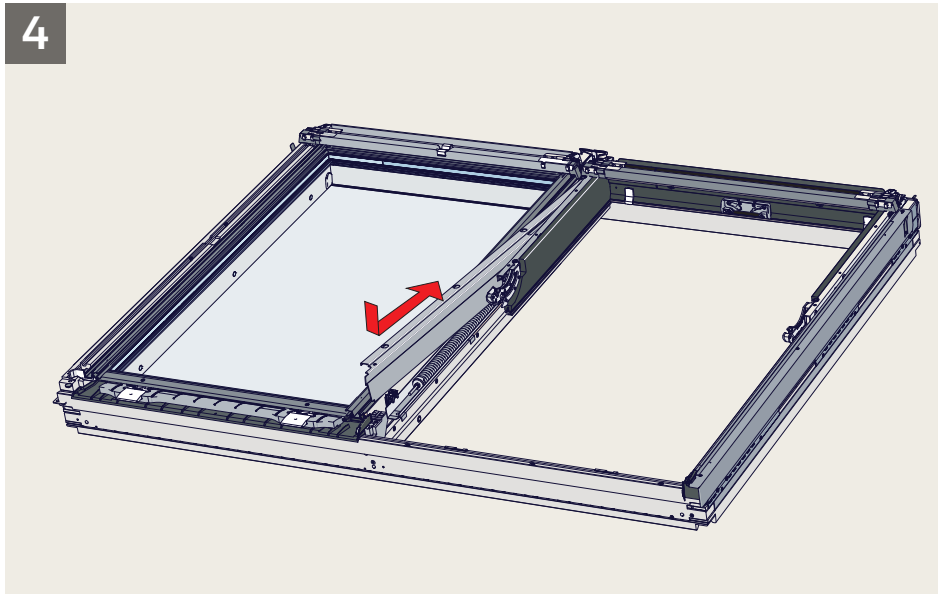
4

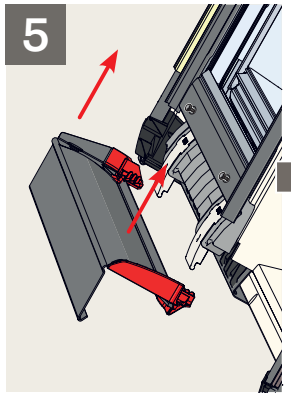
5

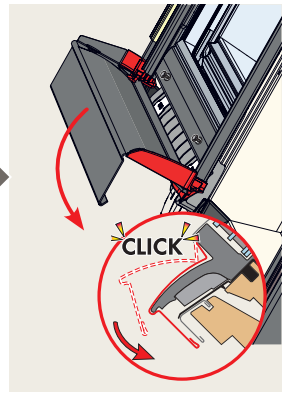
CLICK

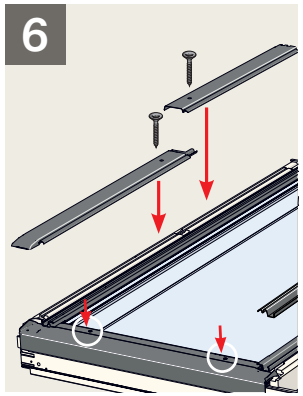
6

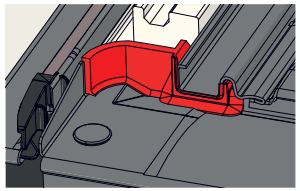

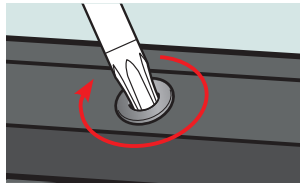

1

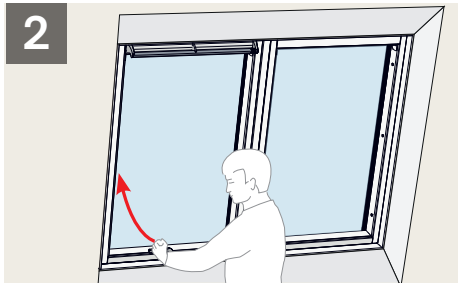
2

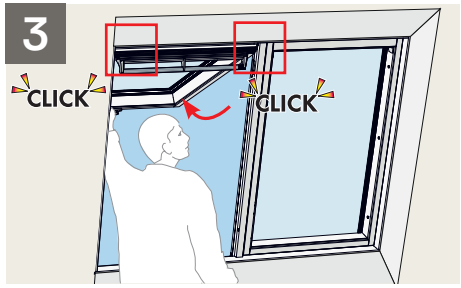
3
CLICK
CLICK

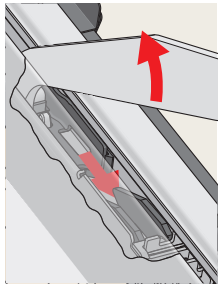

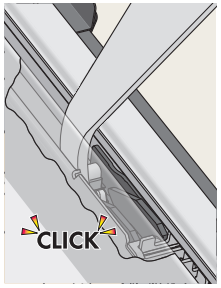
CLICK

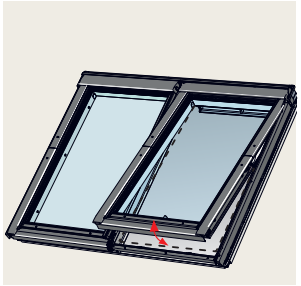

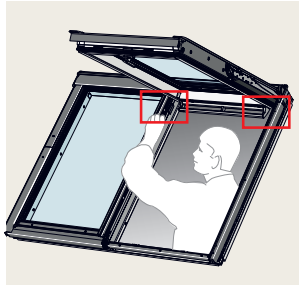

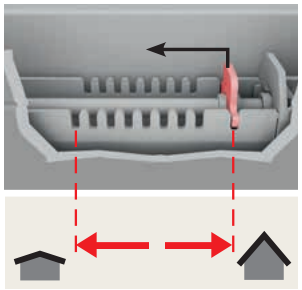

55°–75°

VELUX®

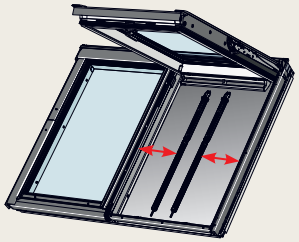

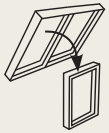

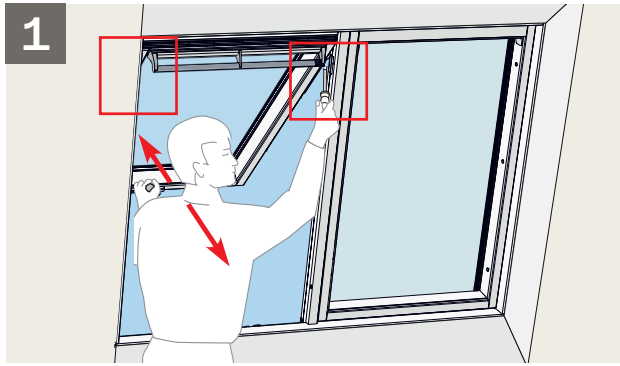
1

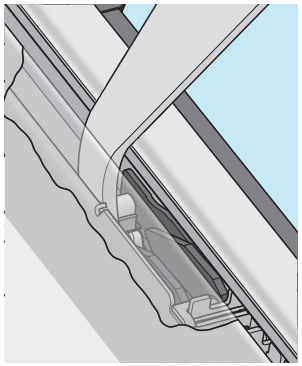

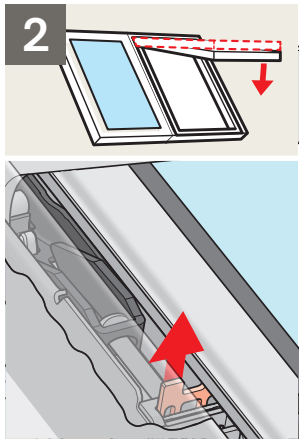
2

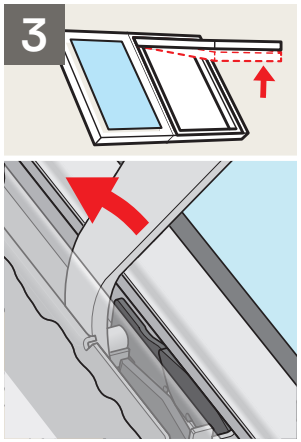
3

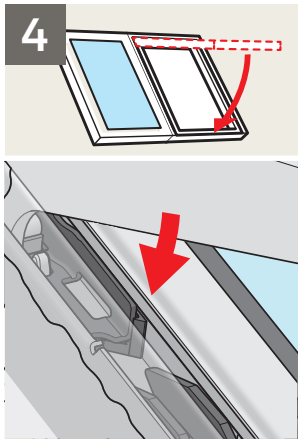
4

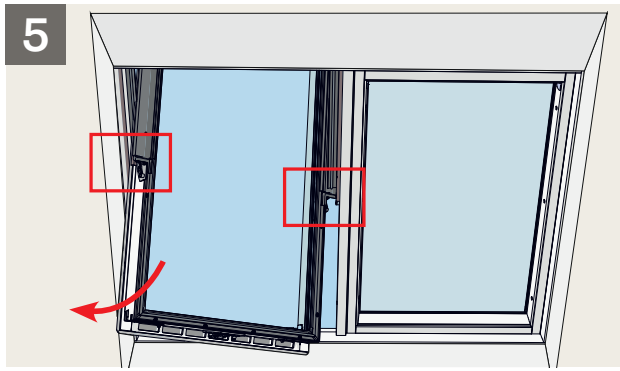
5

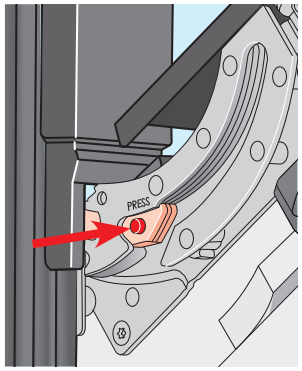
PRESS

VELUX®

www.velux.com

velux.com/contact

INSTALLATION INSTRUCTIONS FOR GPLS. ©2022, 2025 VELUX GROUP ®VELUX AND THE VELUX LOGO ARE REGISTERED TRADEMARKS USED UNDER LICENCE BY THE VELUX GROUP