VELUX®

EKQ/EKX

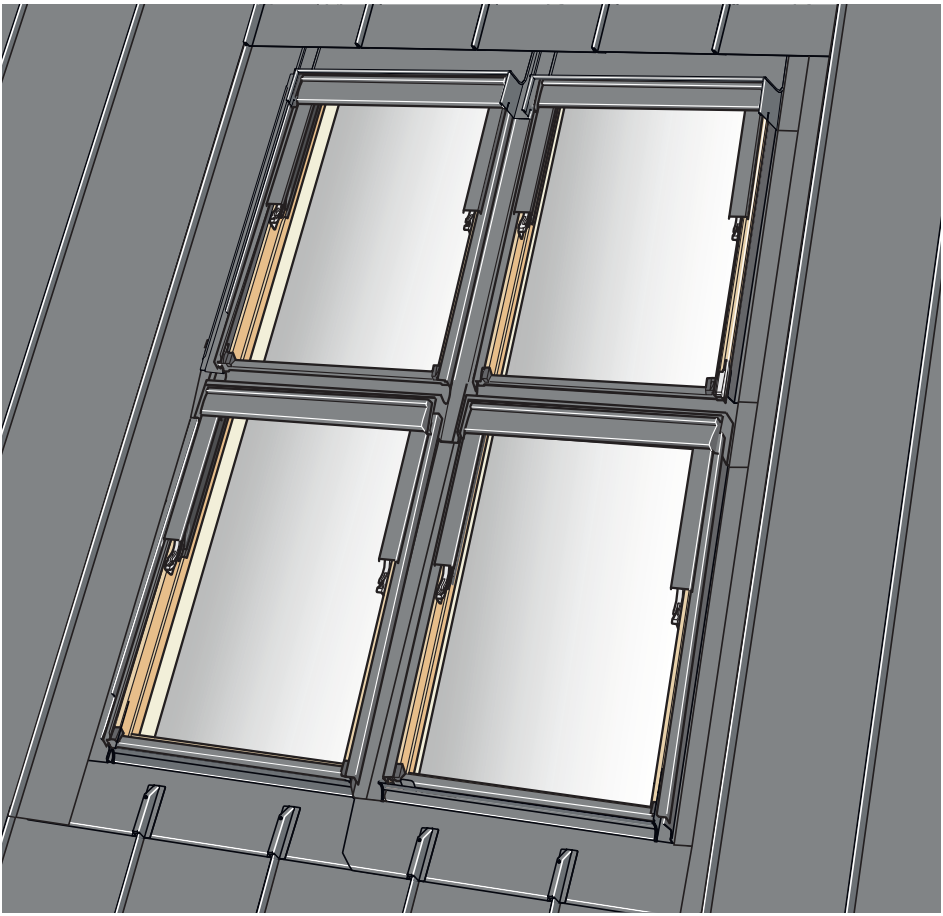

15°–90°

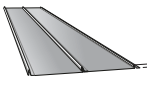

25 - 35 mm

VAS 454967-2024-03

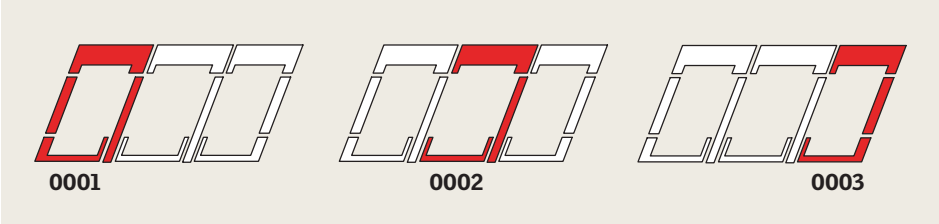
0001
0002
0003

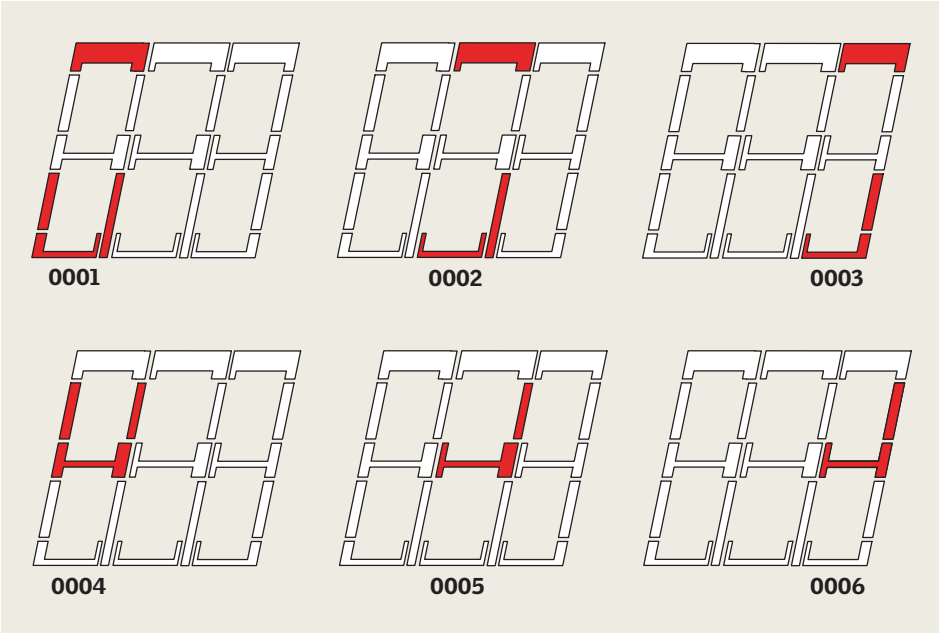
0001
0002
0003
0004
0005
0006

VELUX
VELUX
a = 100 - 160 mm
b = XX mm

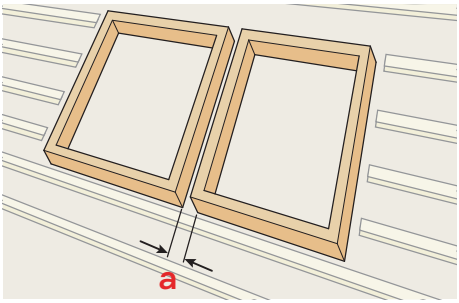
a

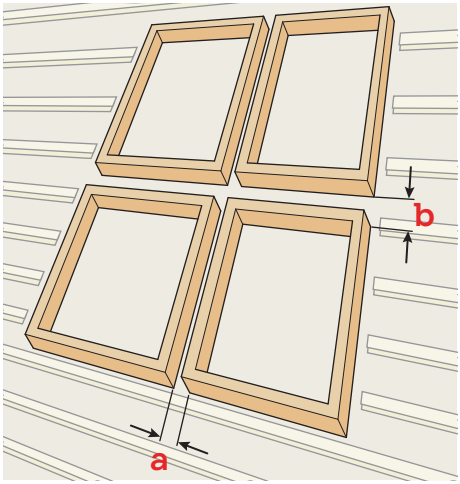
b
a

1

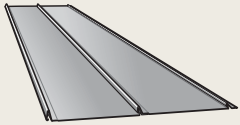

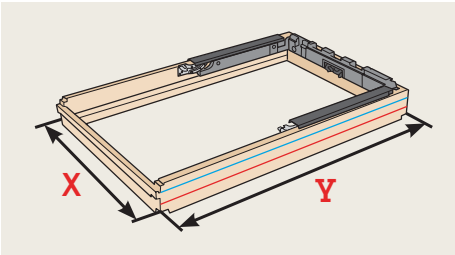
X
Y

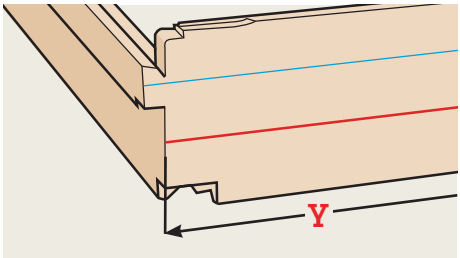
Y

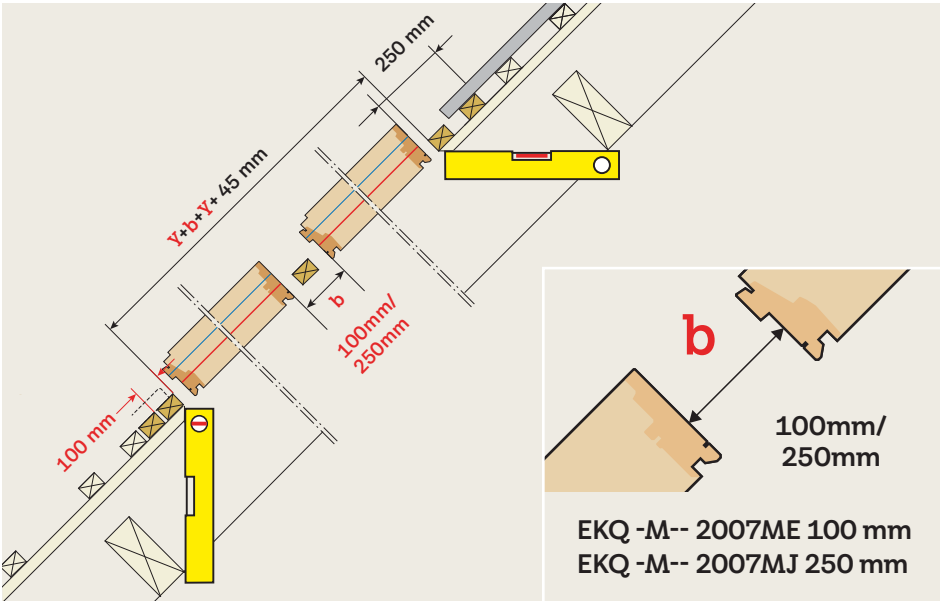
250 mm
Y+b+Y+ 45 mm
b
100mm/
250mm
100 mm
b
100mm/
250mm
EKQ -M-- 2007ME 100 mm
EKQ -M-- 2007MJ 250 mm

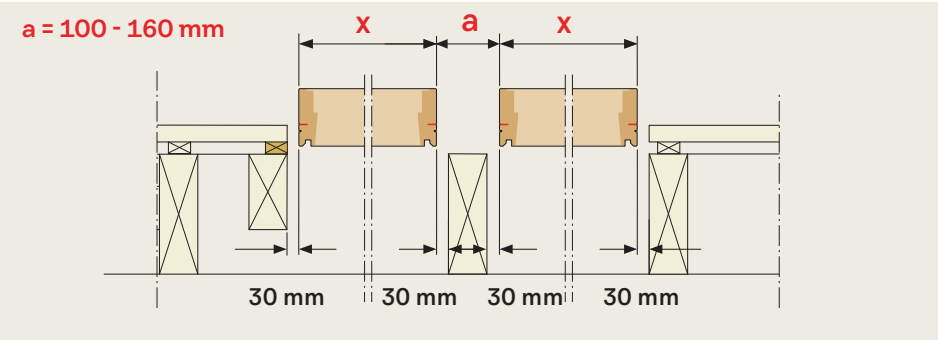
a = 100 - 160 mm
X
a
X
30 mm
30 mm
30 mm
30 mm

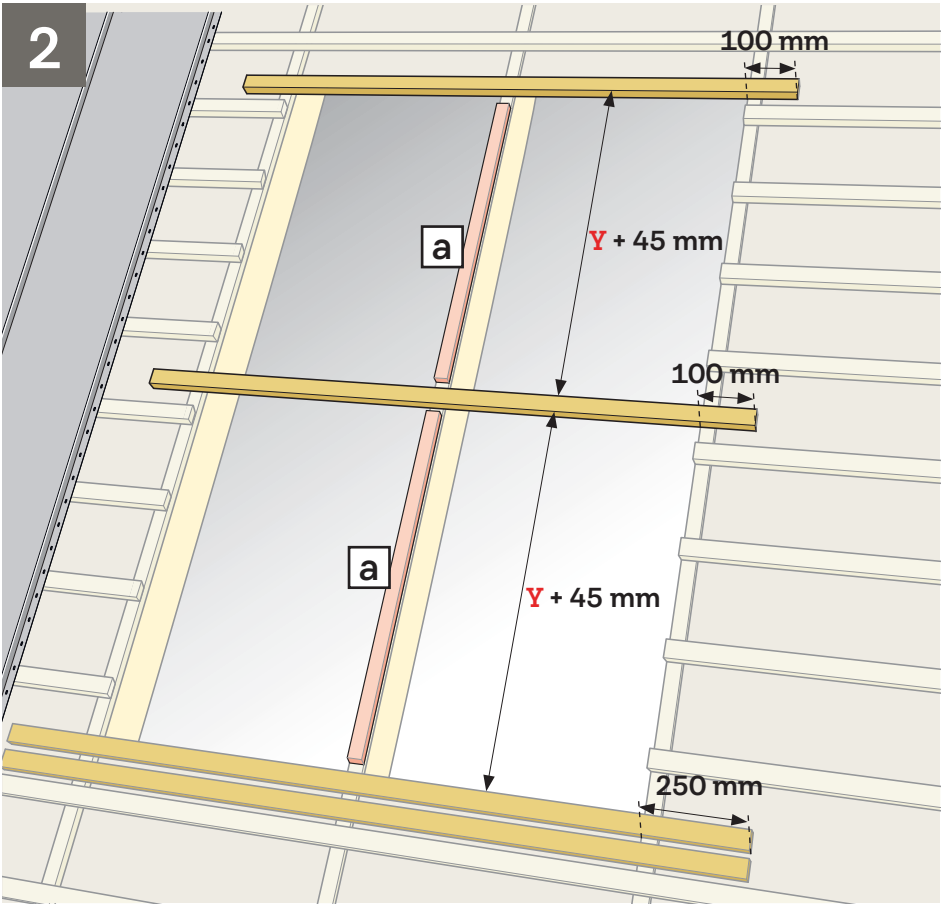
2
100 mm
a
Y + 45 mm
100 mm
a
Y + 45 mm
250 mm

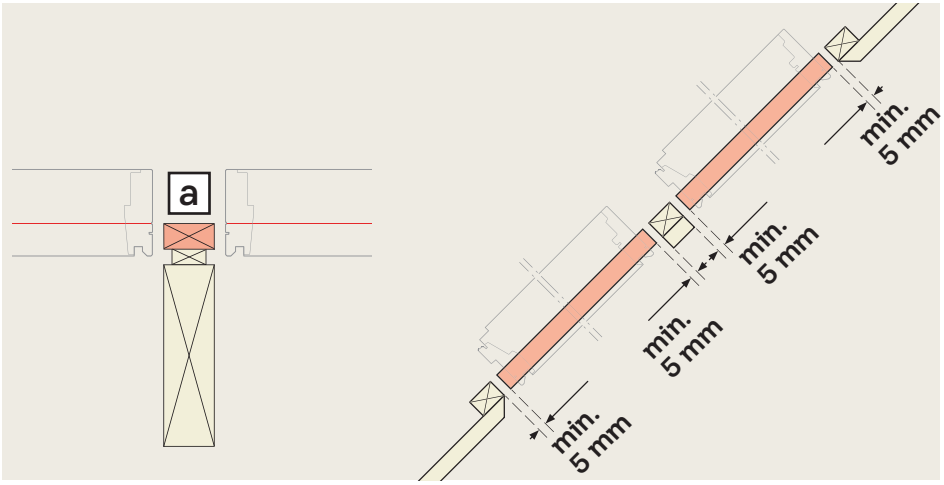
a
min.
5 mm
min.
5 mm
min.
5 mm
min.
5 mm

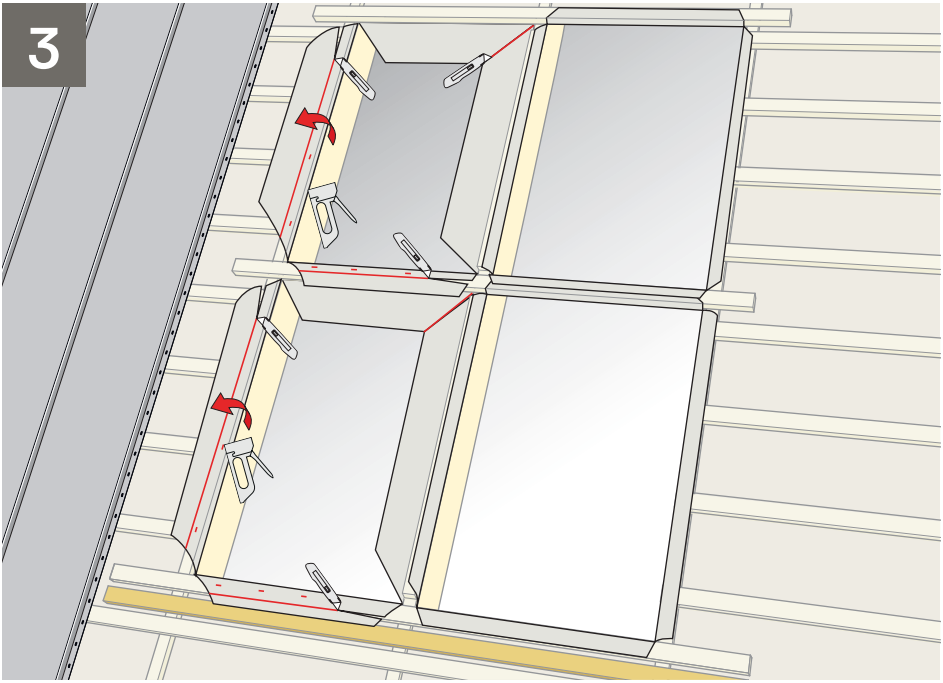
3

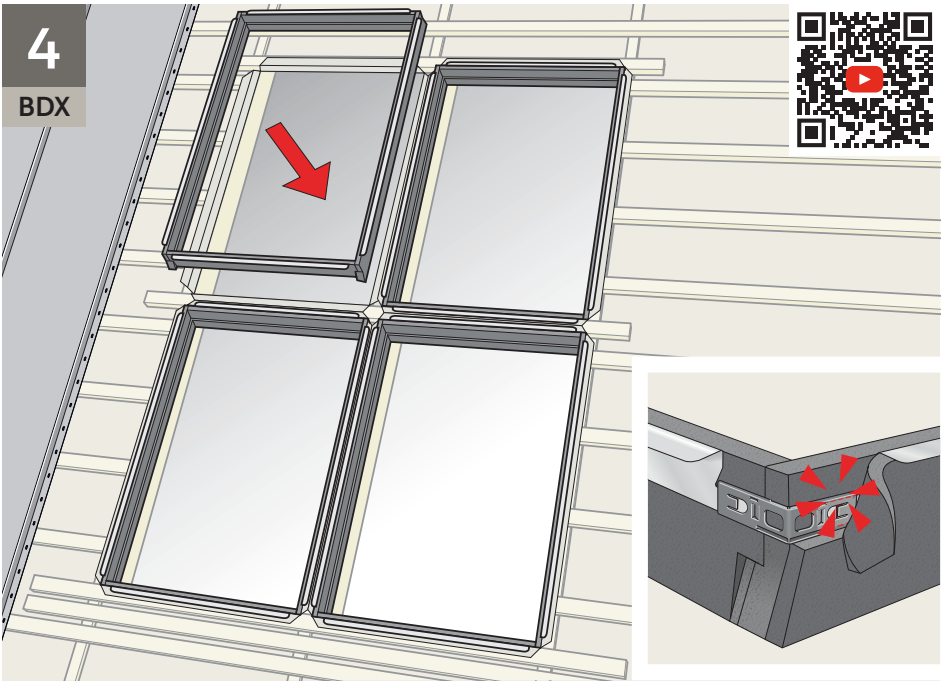
4
BDX

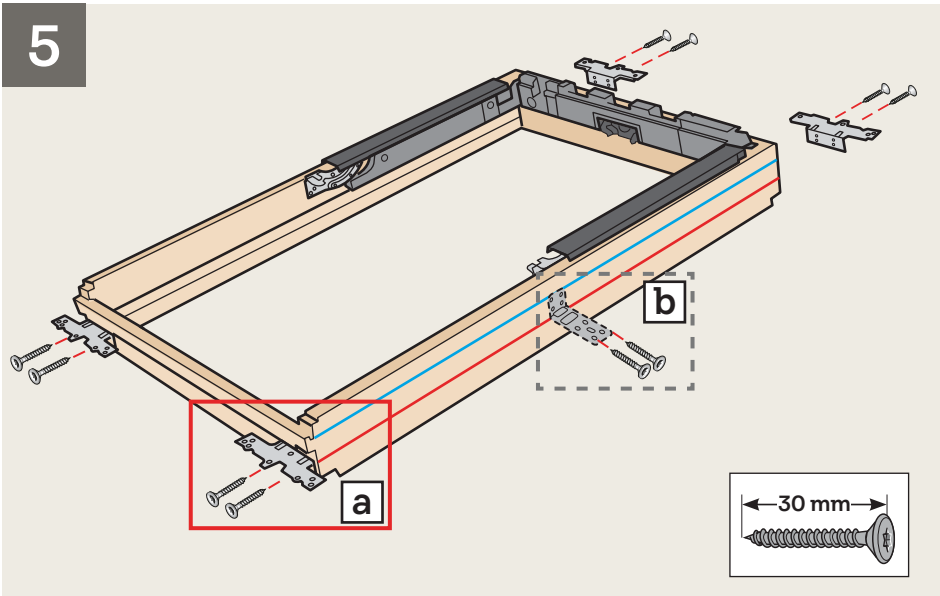
5
a
b
30 mm

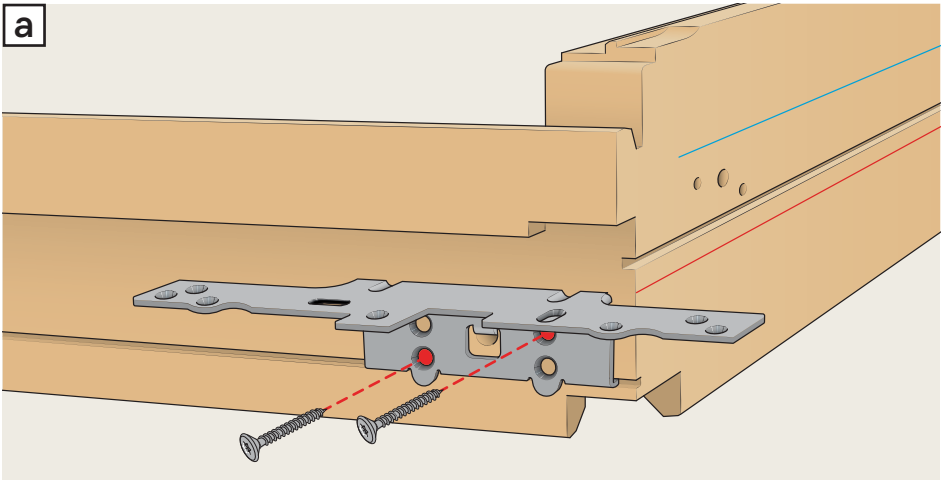
a

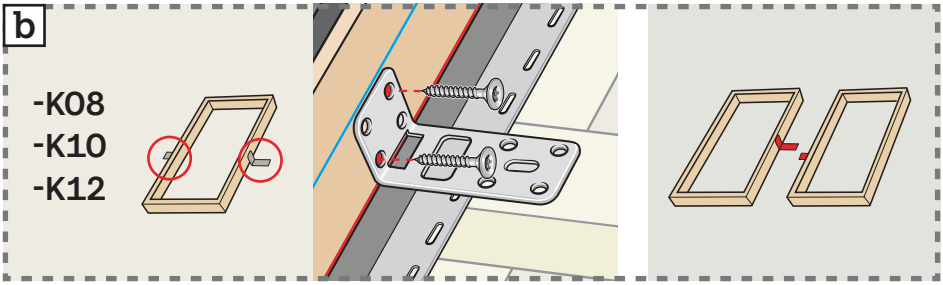
b
-K08
-K10
-K12

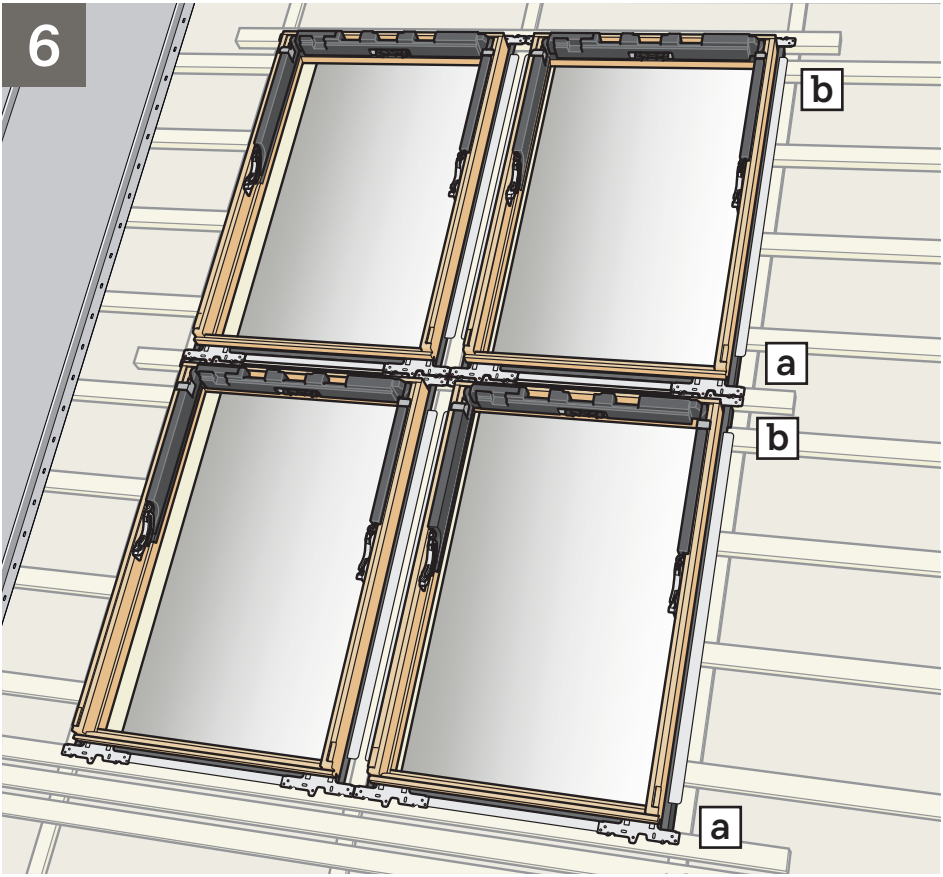
6
b
a
b
a

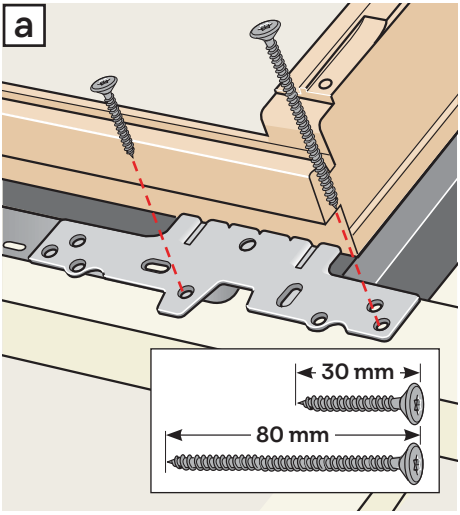
a
30 mm
80 mm

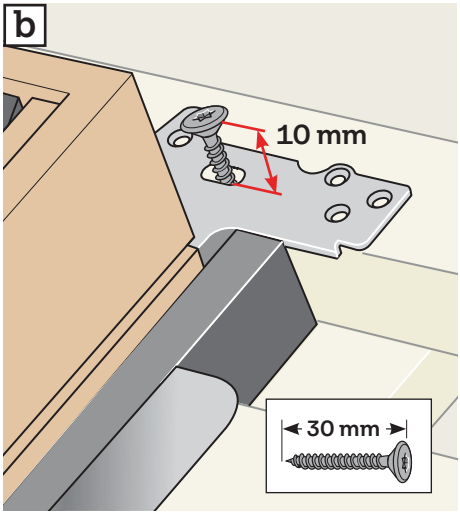
b
10 mm
30 mm

7

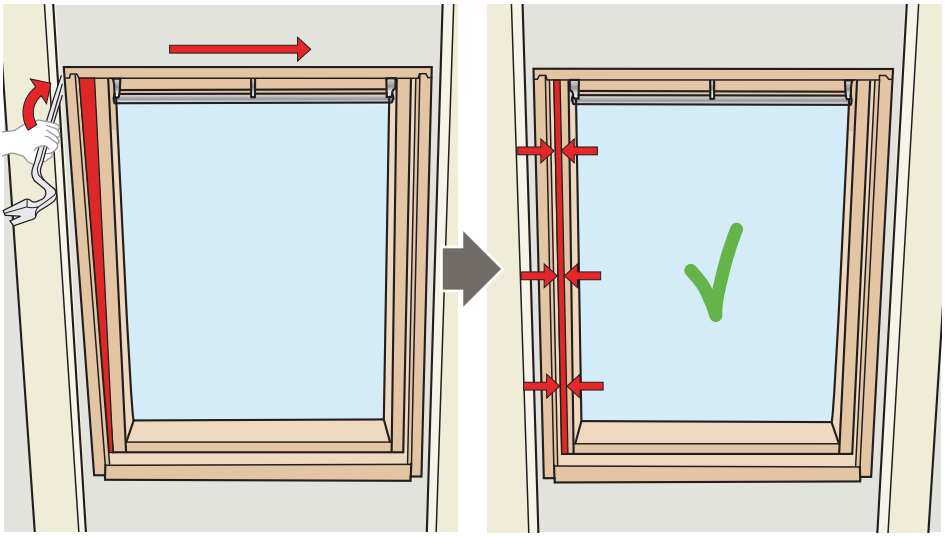

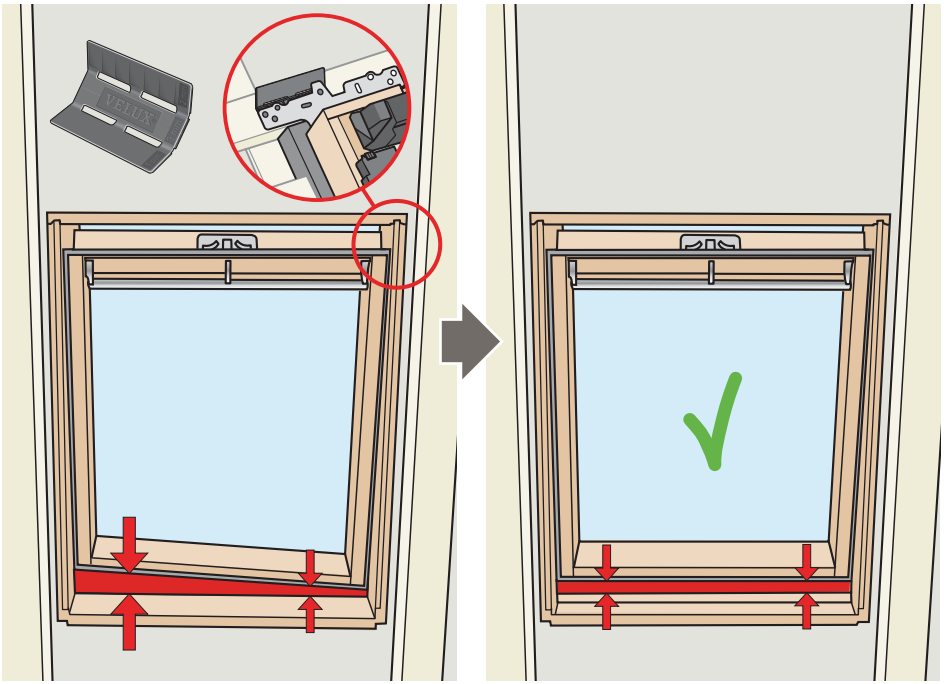

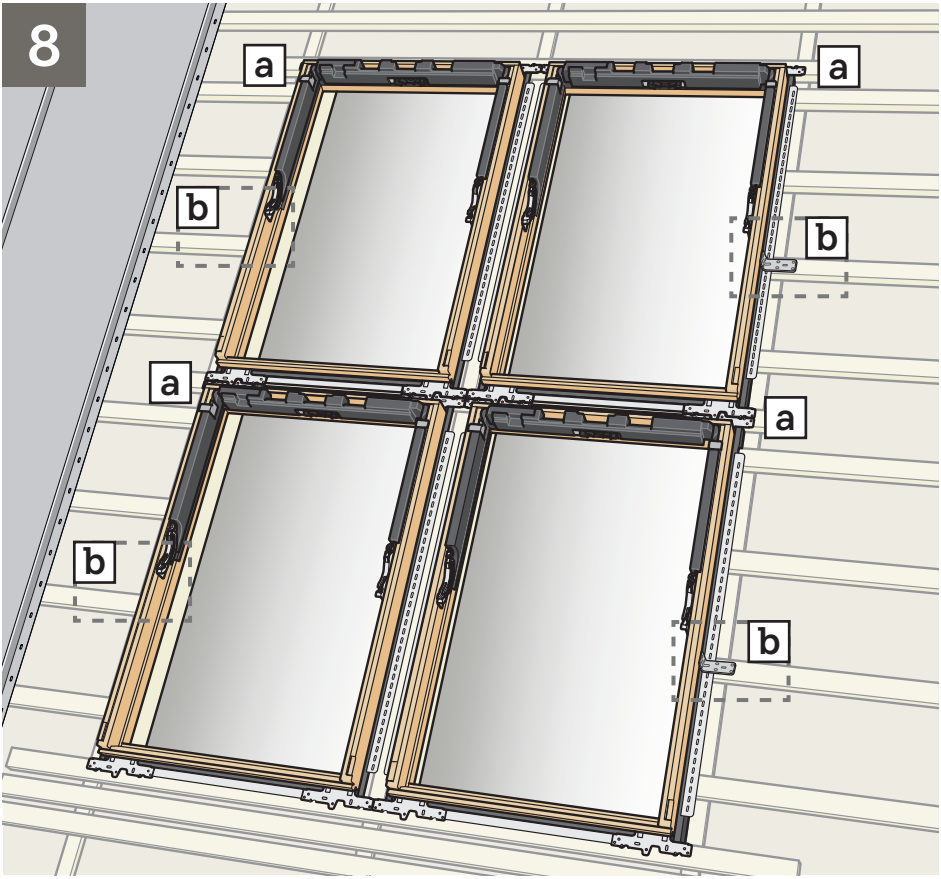
8
a
a
b
b
a
a
b
b

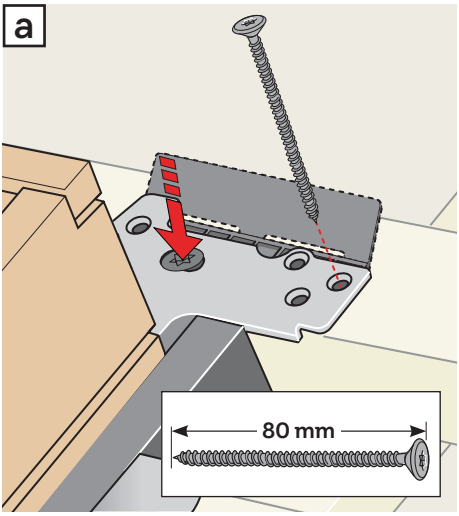
a
80 mm

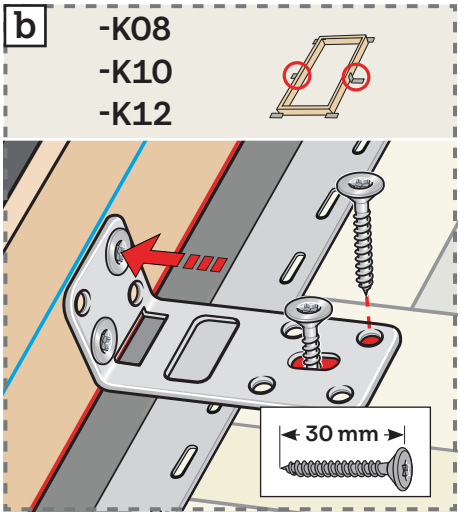
b
-K08
-K10
-K12
30 mm

BFX

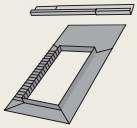

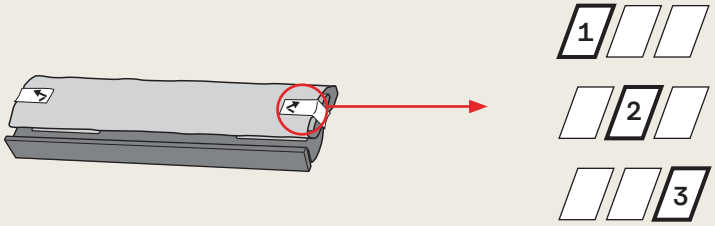

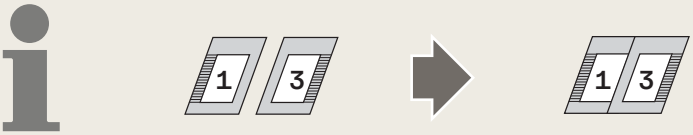

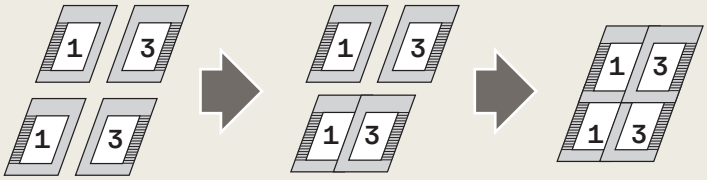

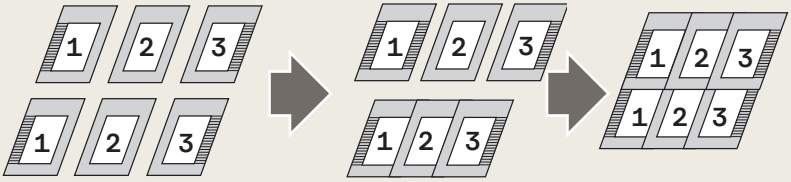

BFX

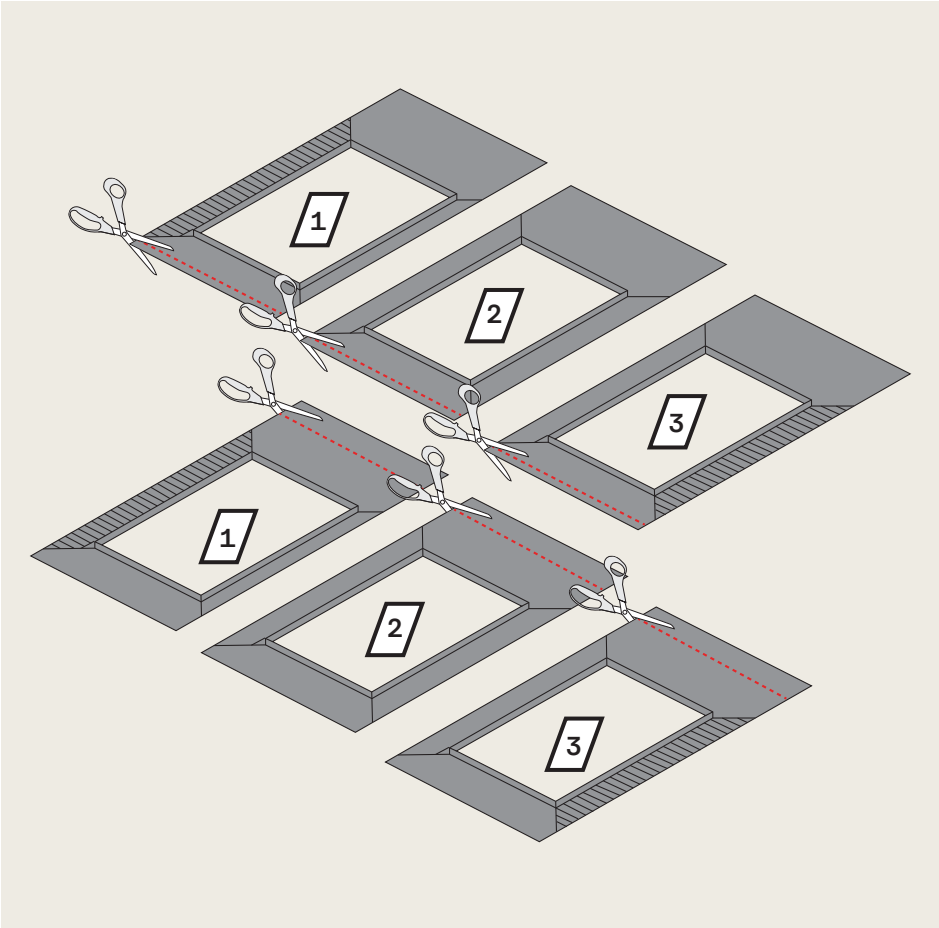

9

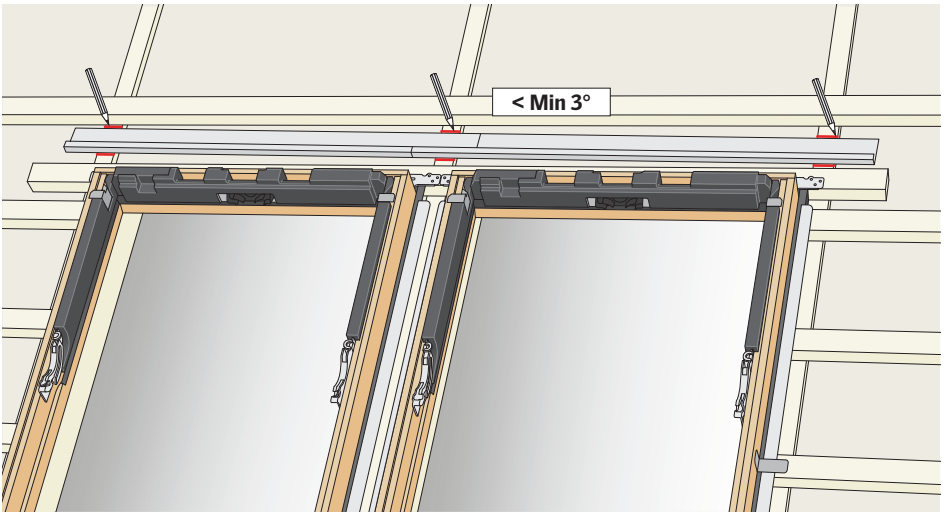

10

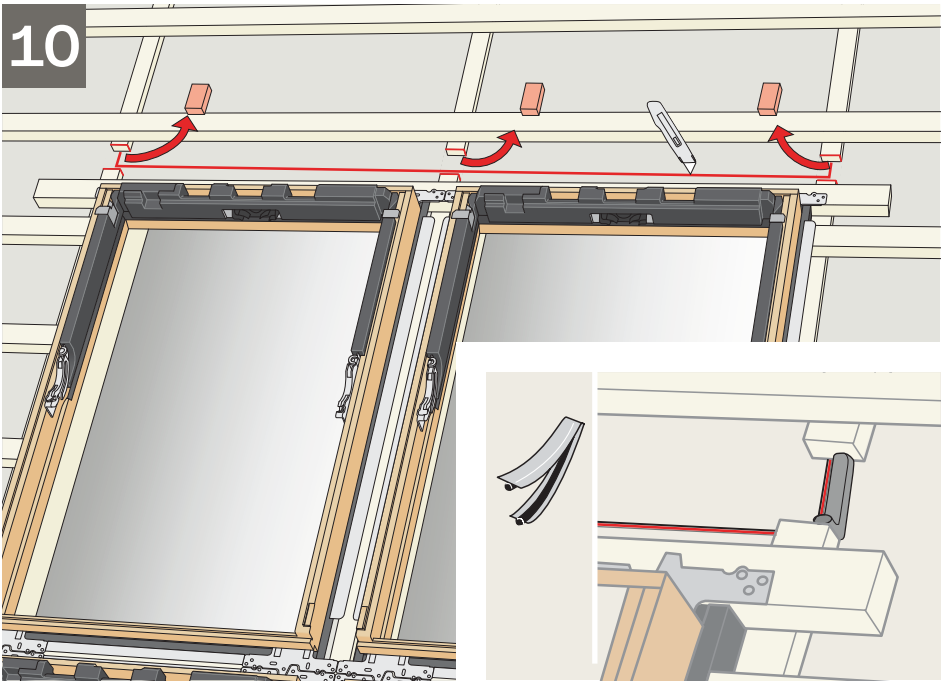

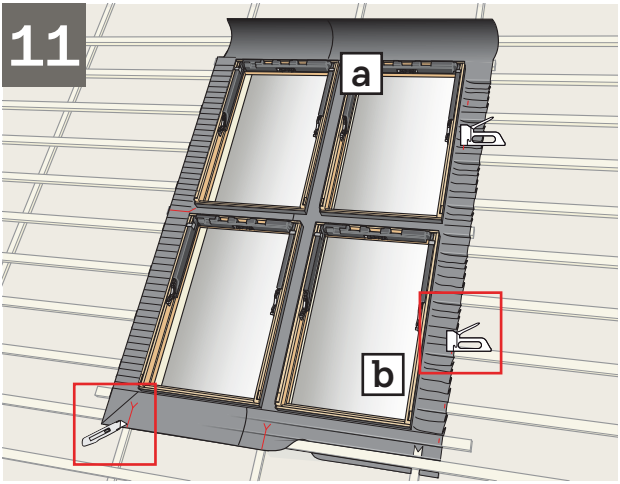
11
a
b

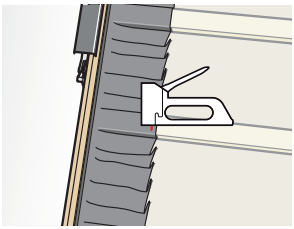

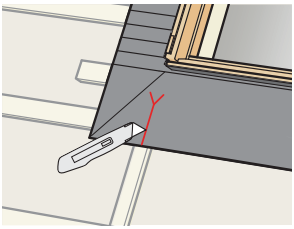

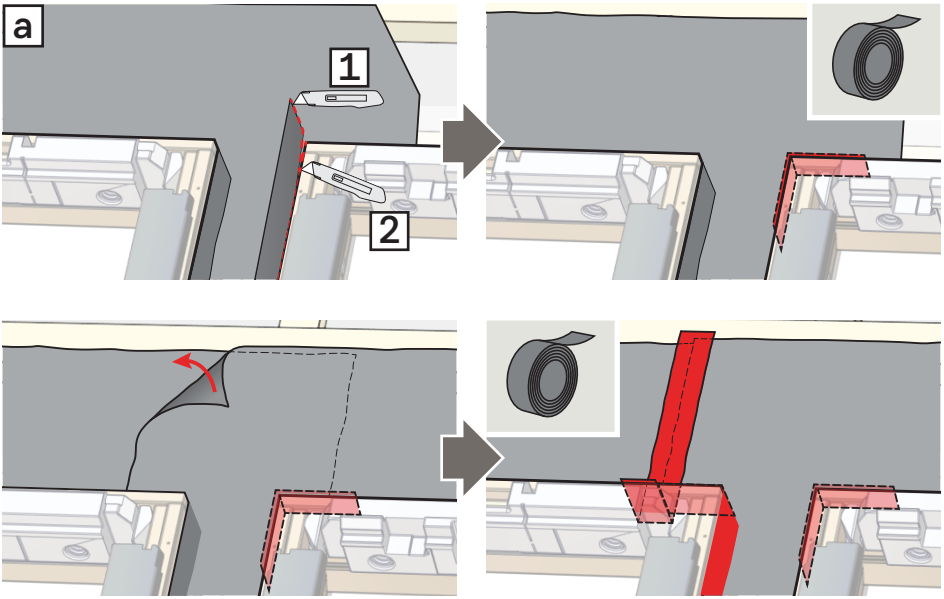
a
1
2

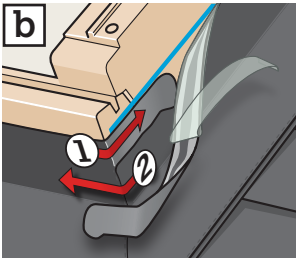
b
1
2

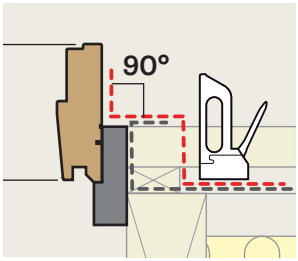
90°

12

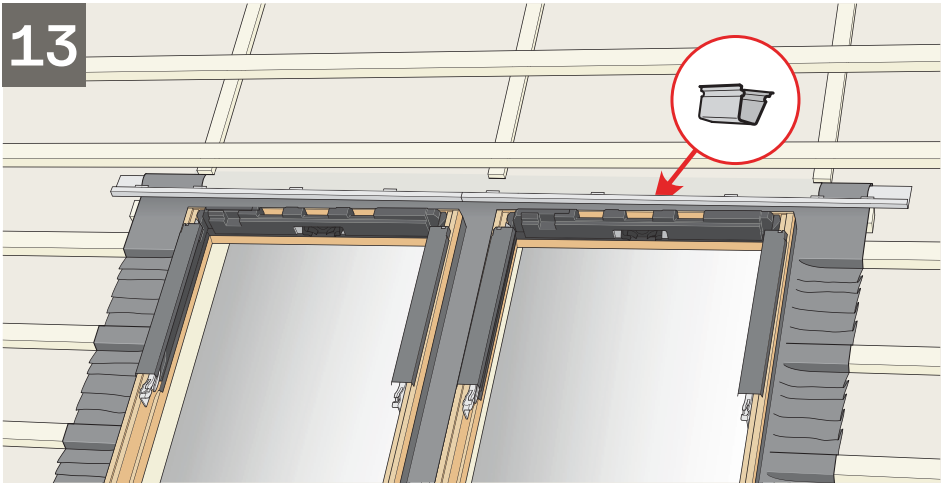
13

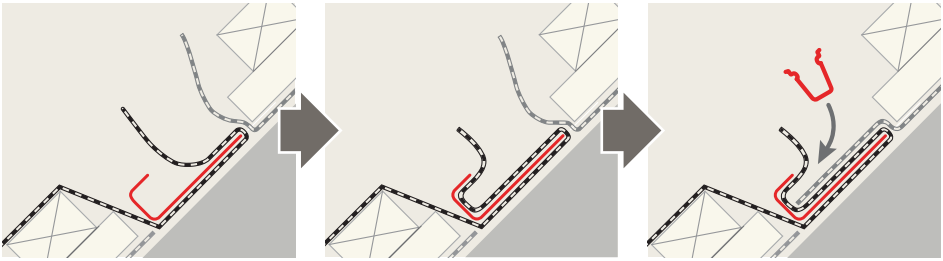

14

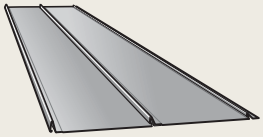

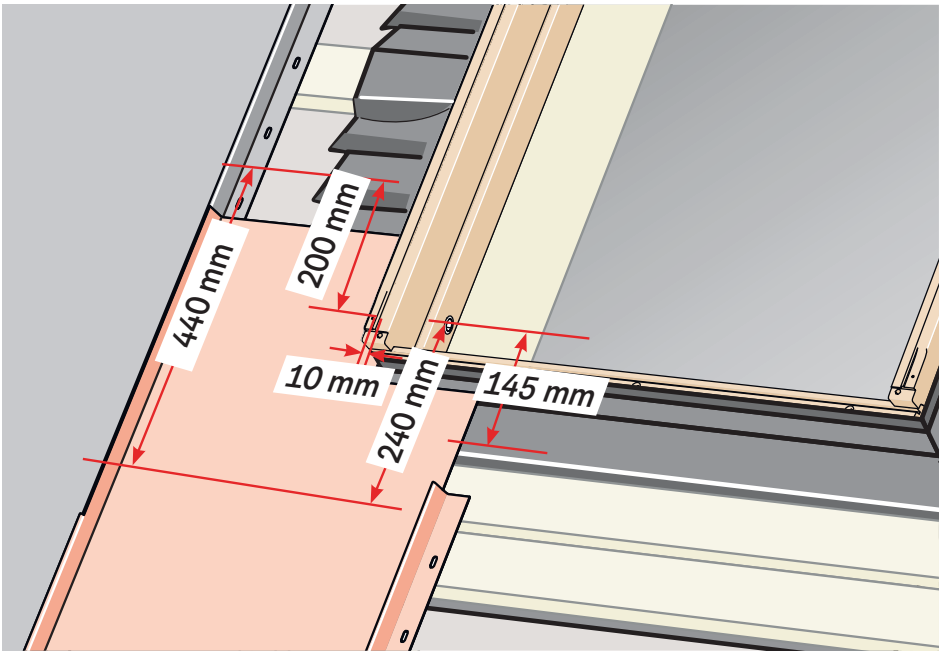

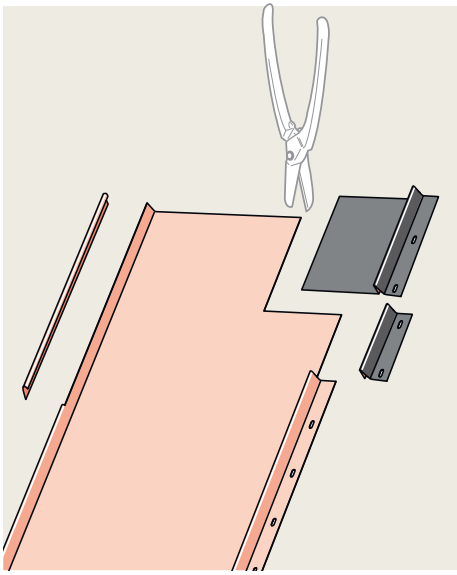

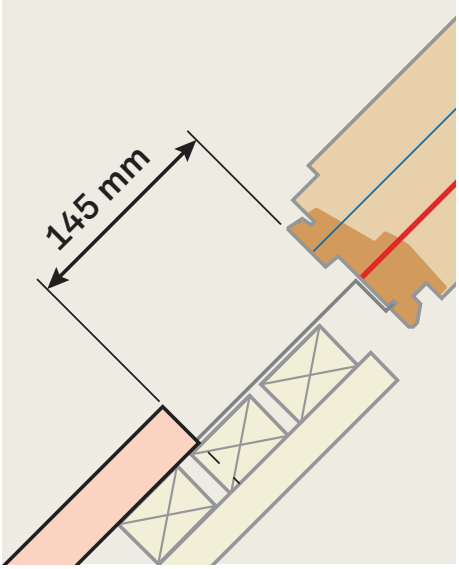

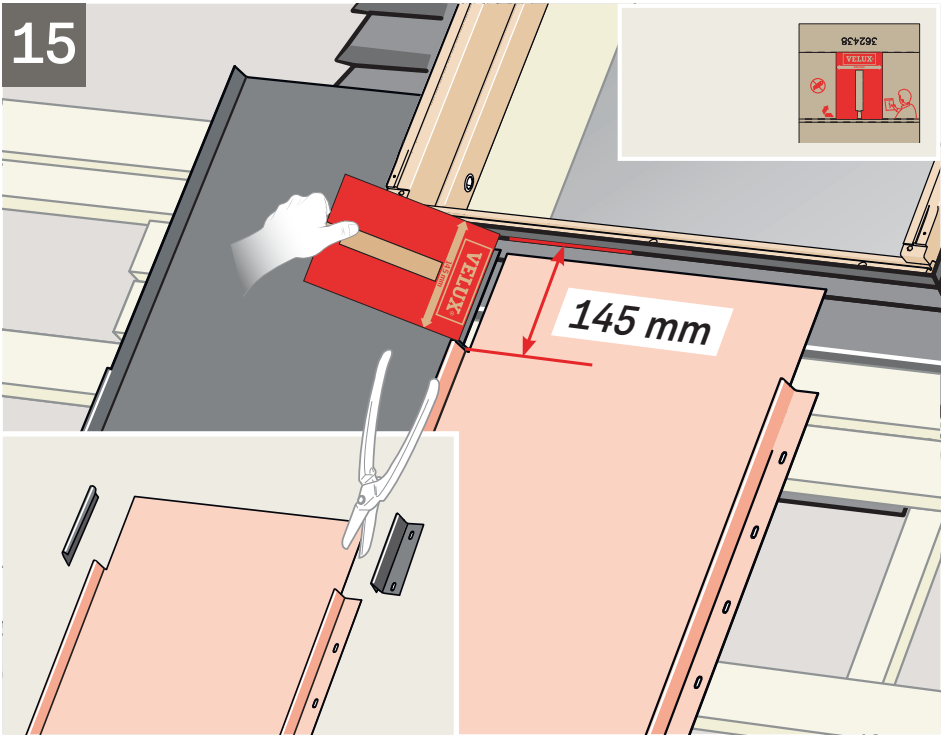
15
VELUX
145 mm
362438
VELUX

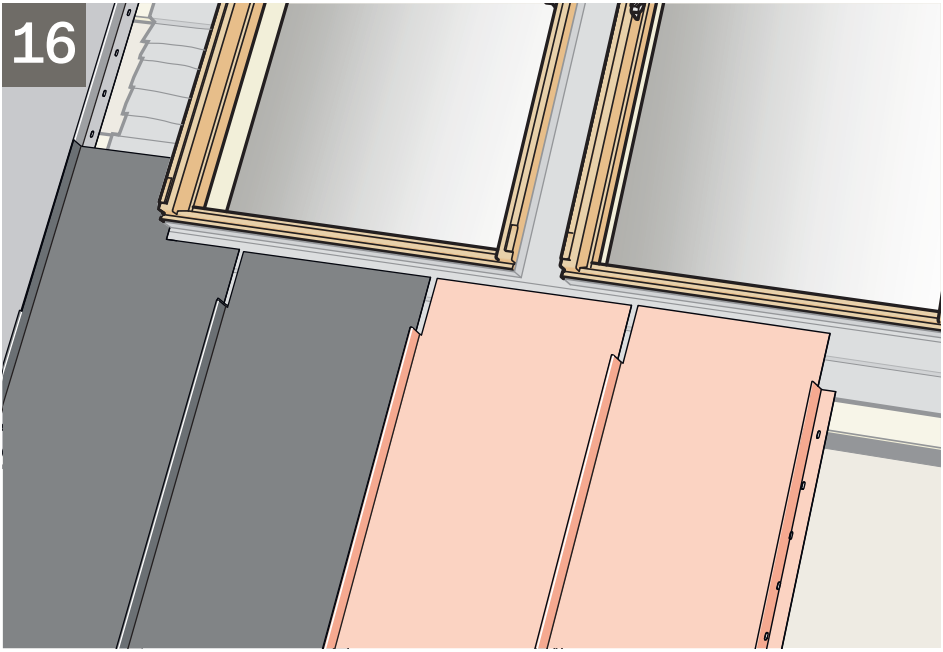
16

17

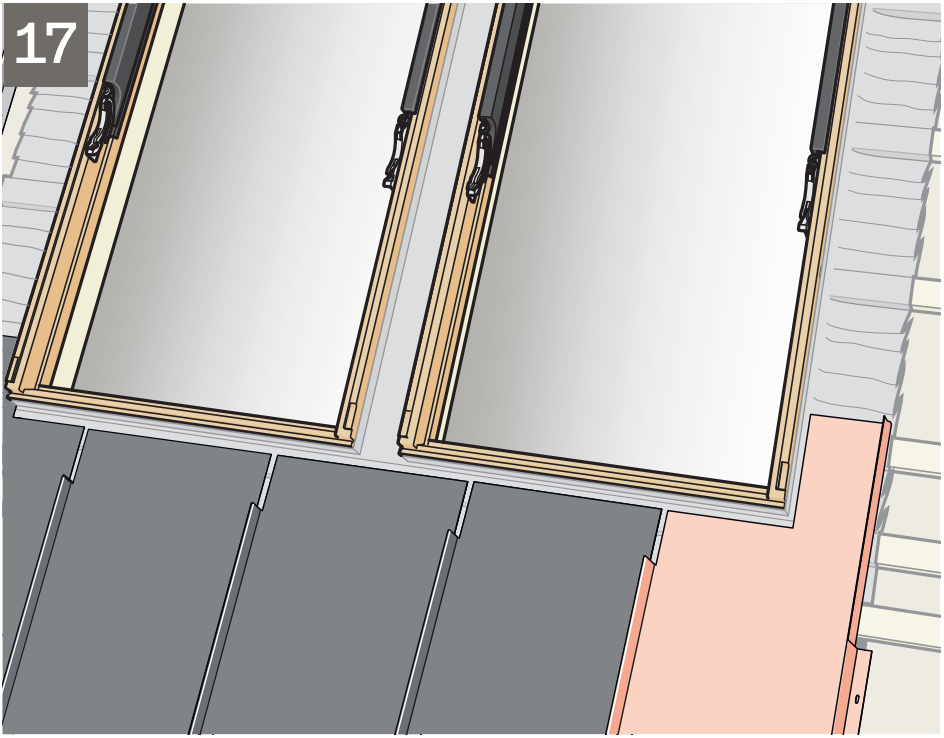

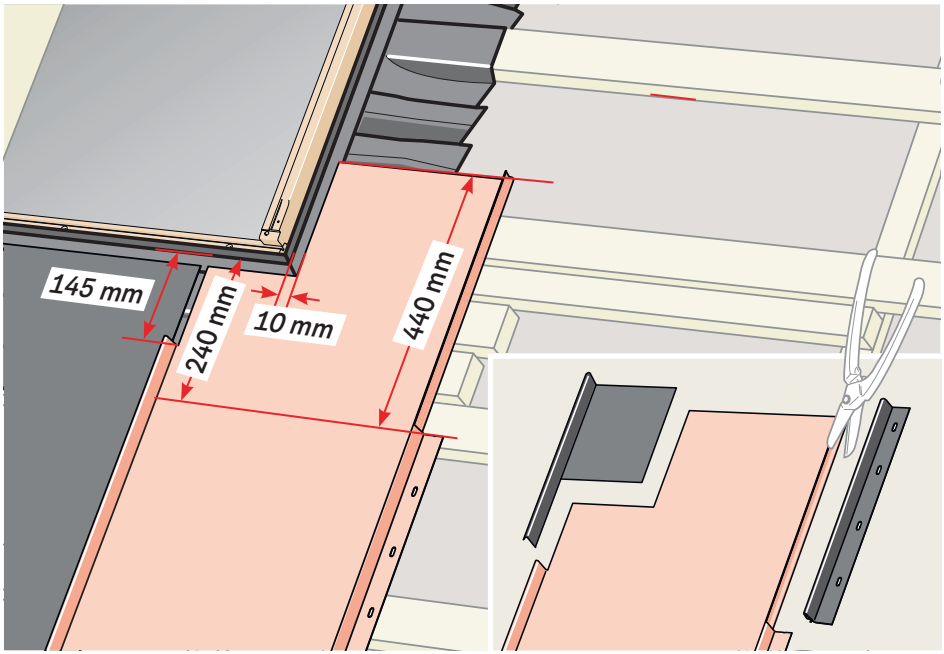

18

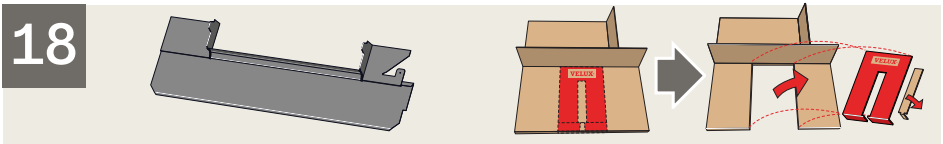

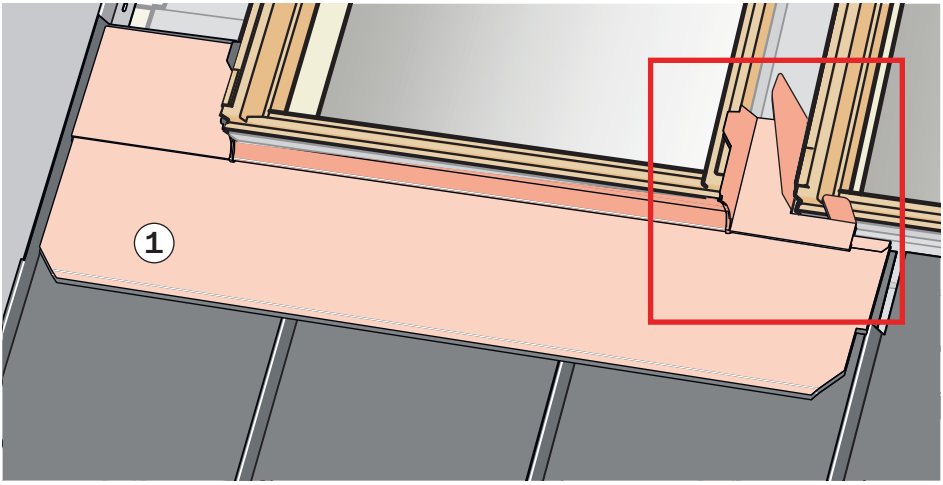

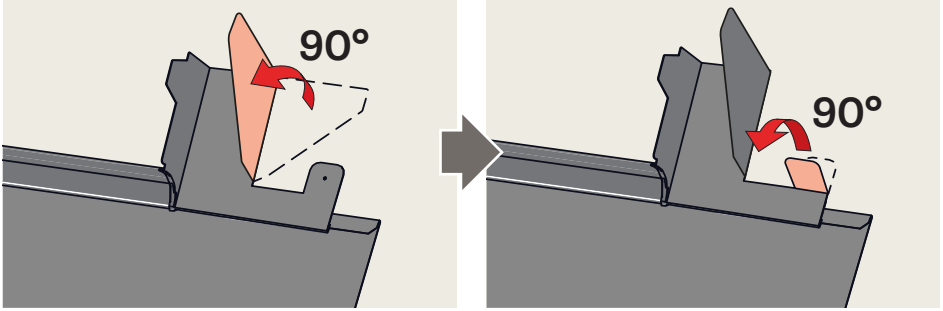

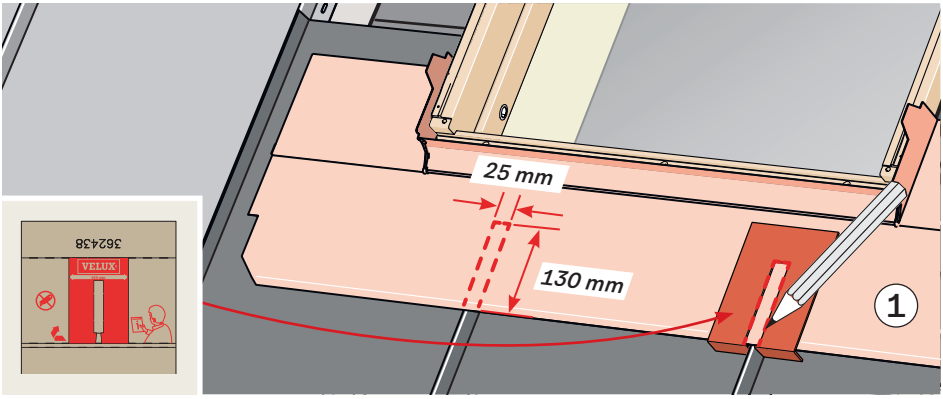

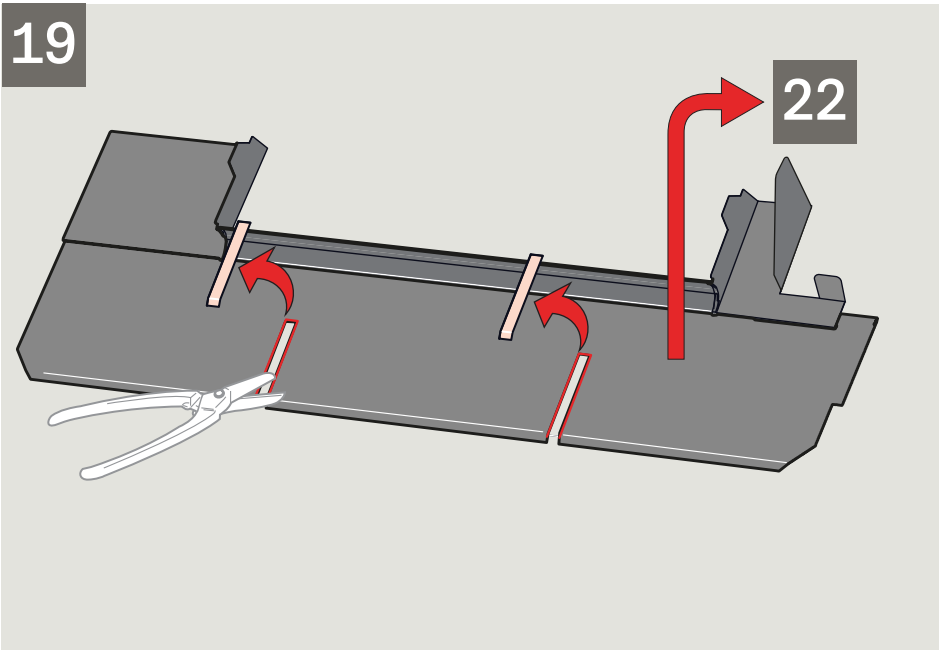
19
22

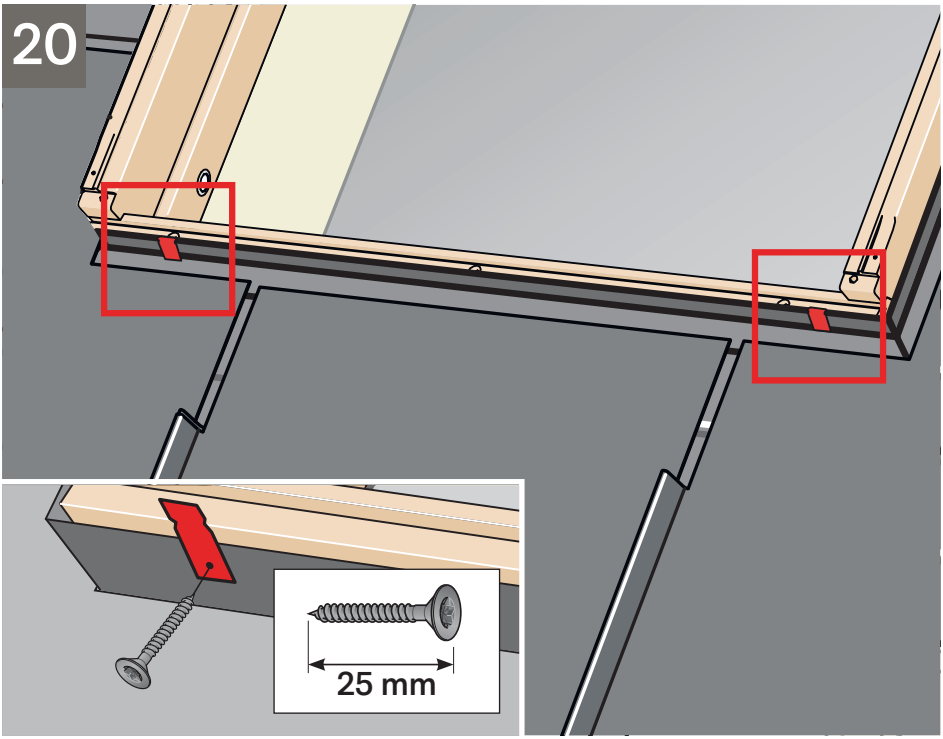
20
25 mm

21

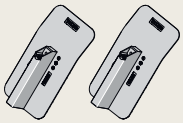

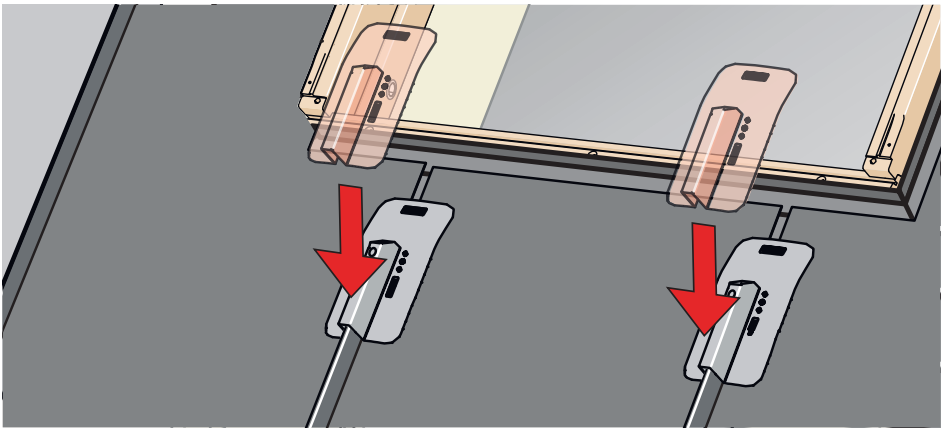

22

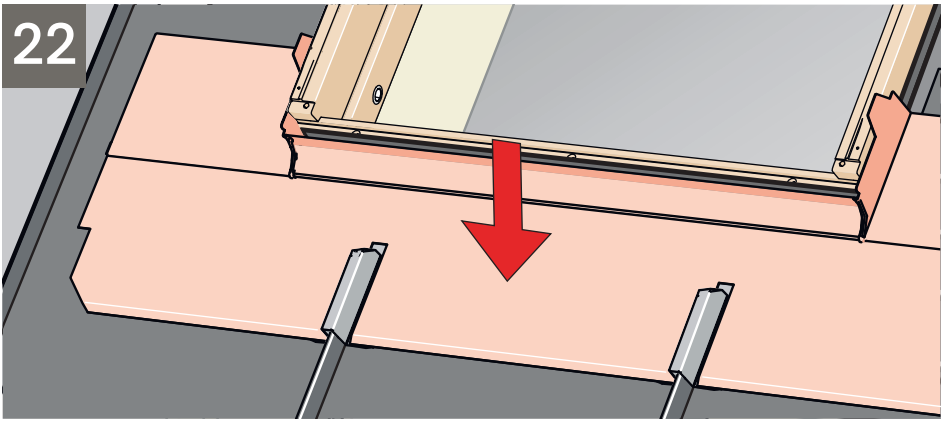

23

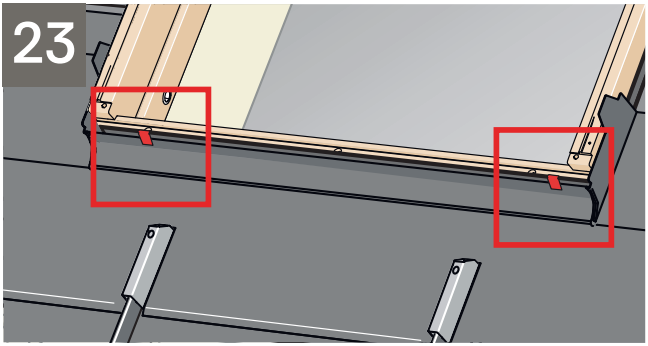

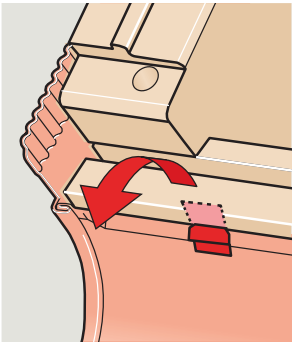

24

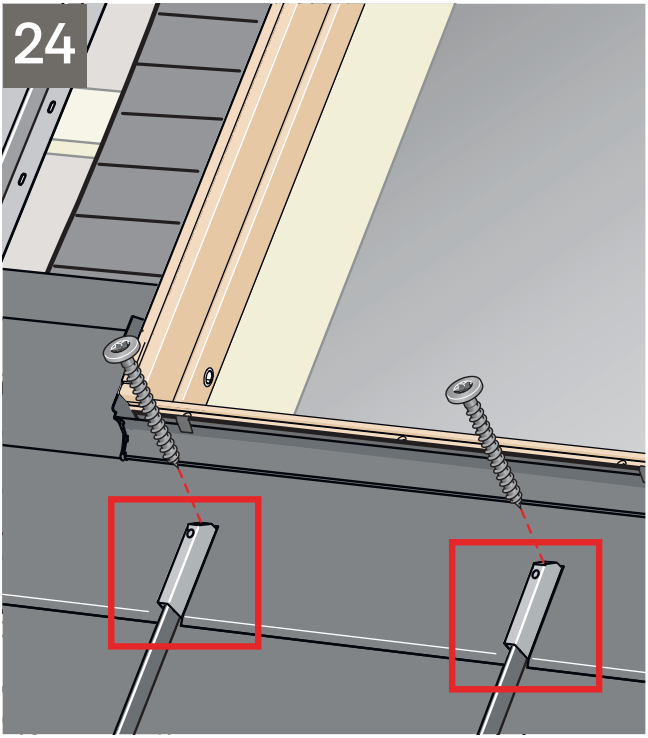

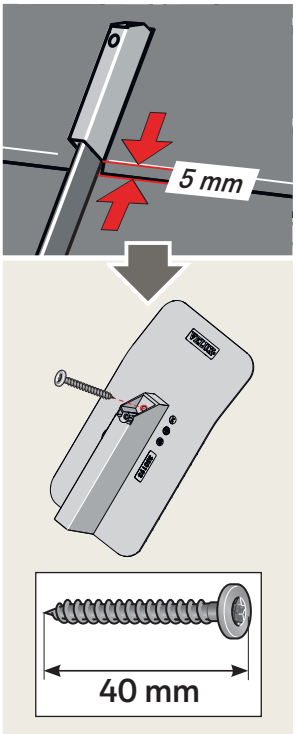

25

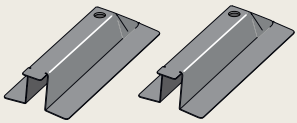

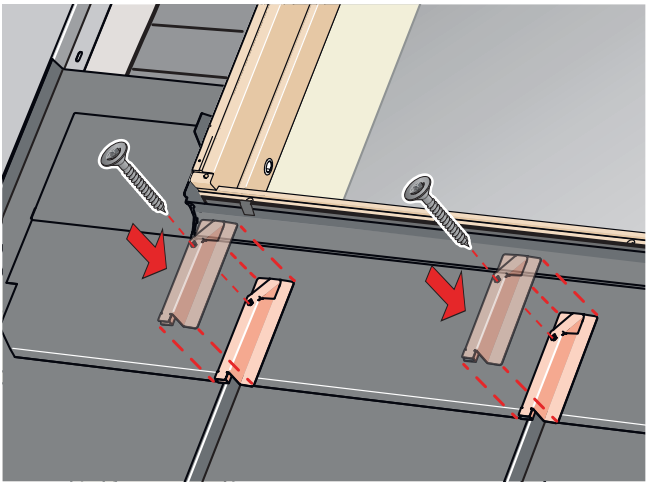

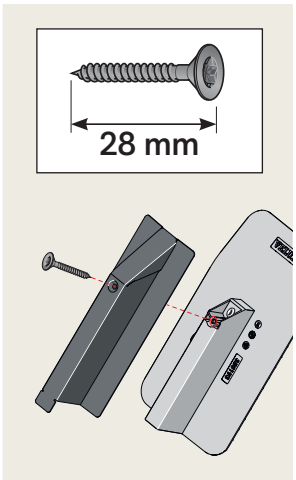

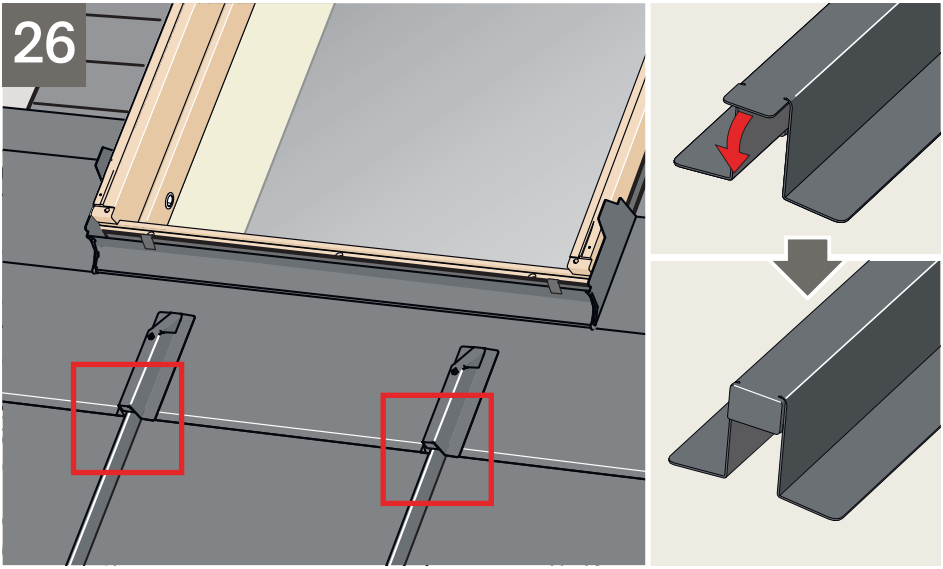
26

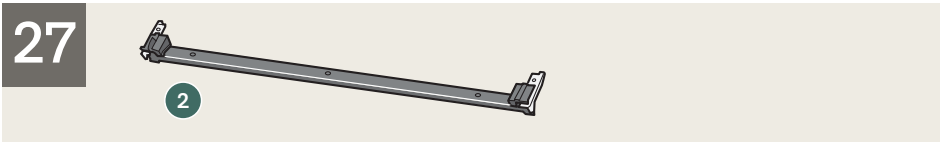
27
2

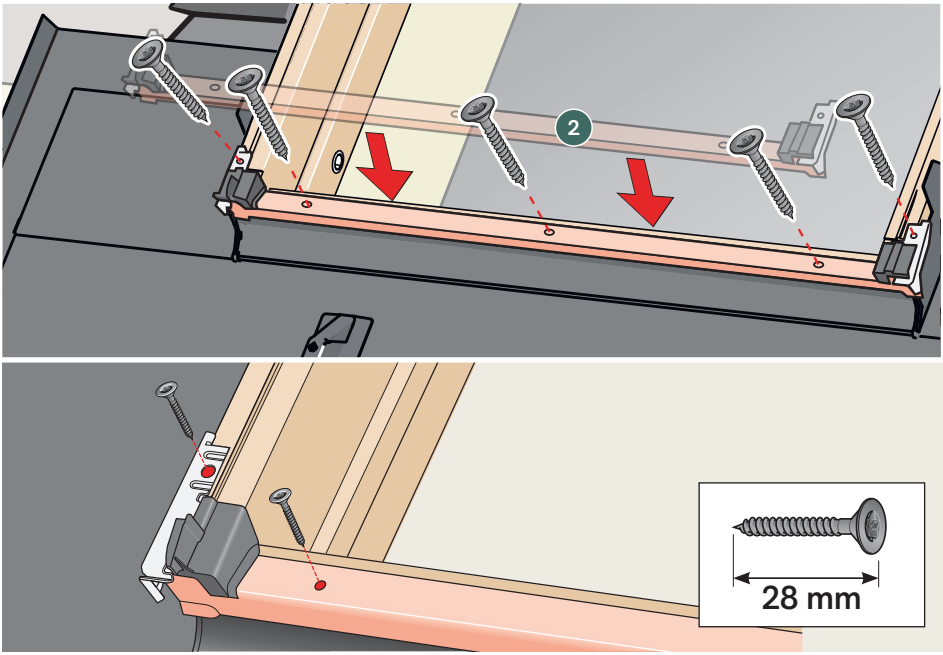
2
28 mm

28

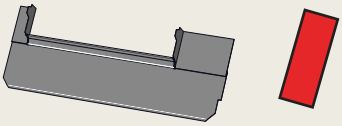

19 → 27

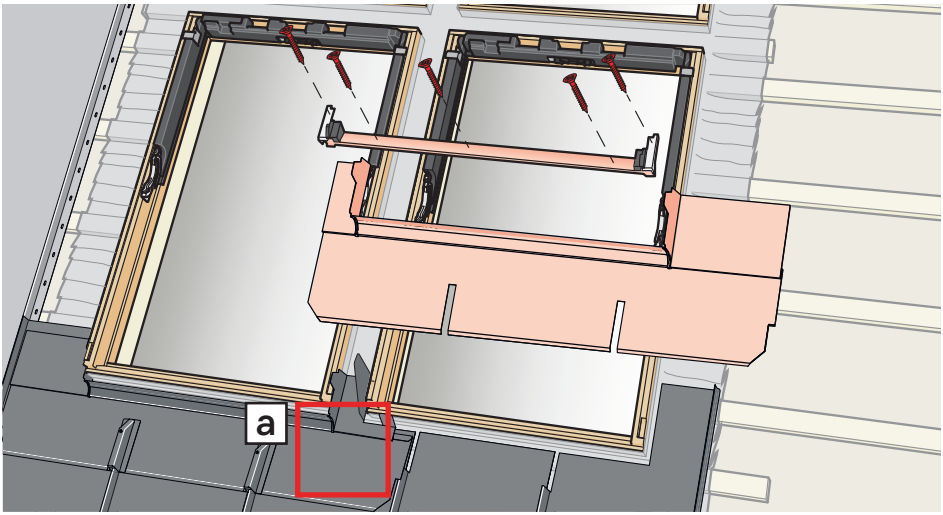

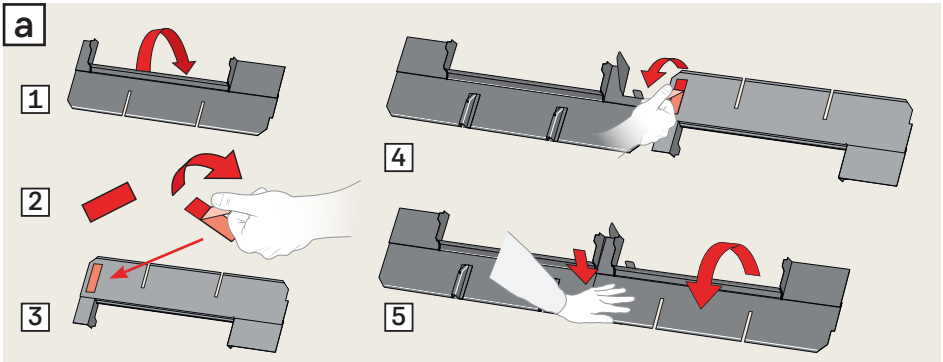

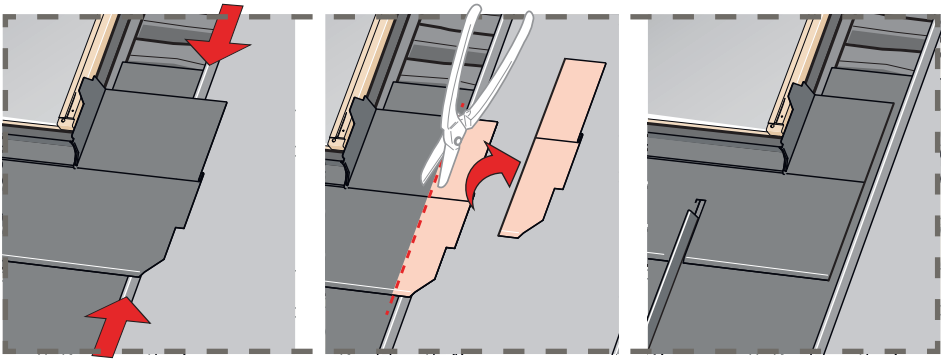

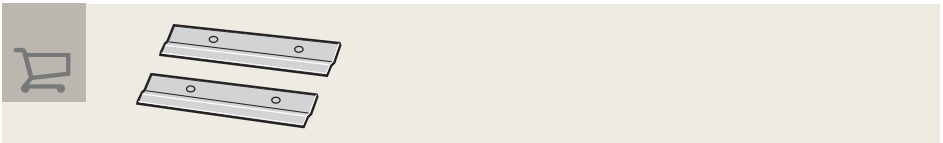

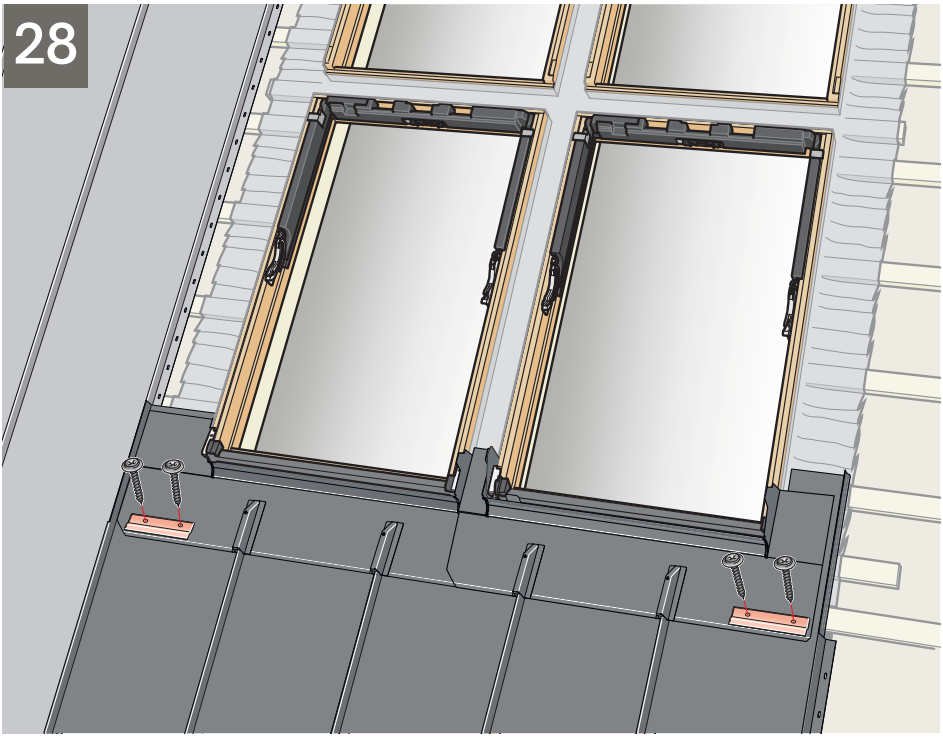
28

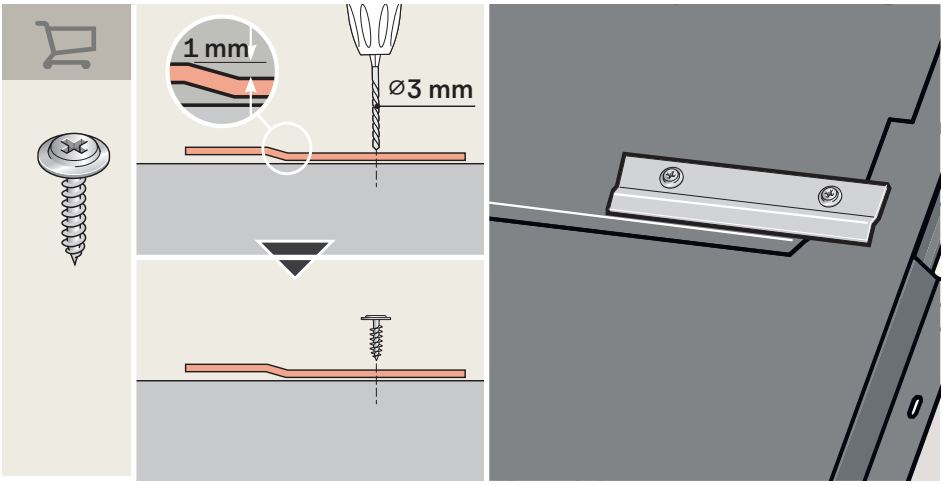
1 mm
Ø3 mm

29

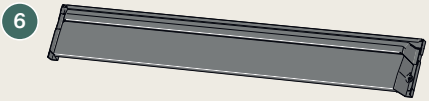

30

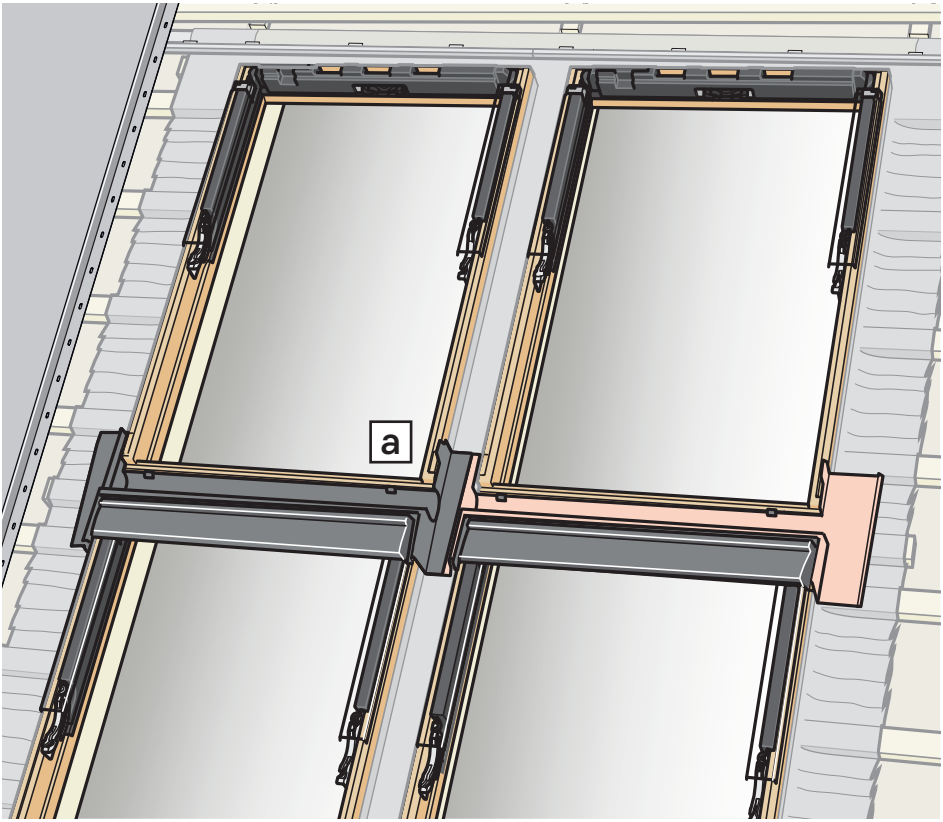
a

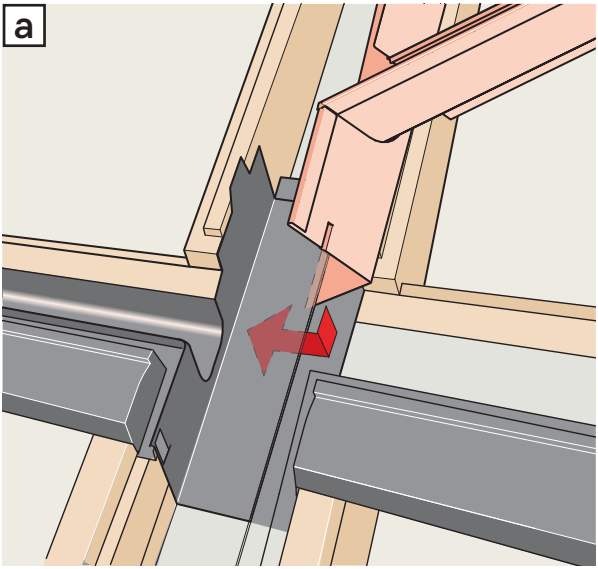
a

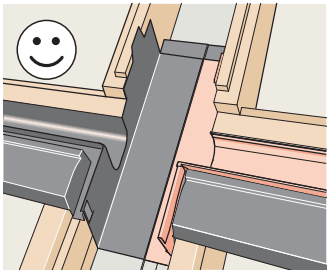

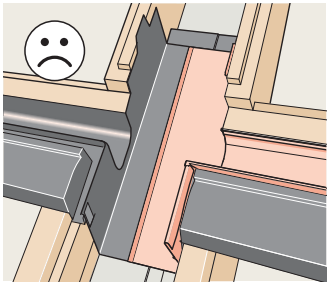

31

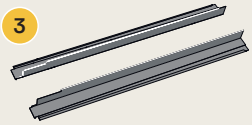

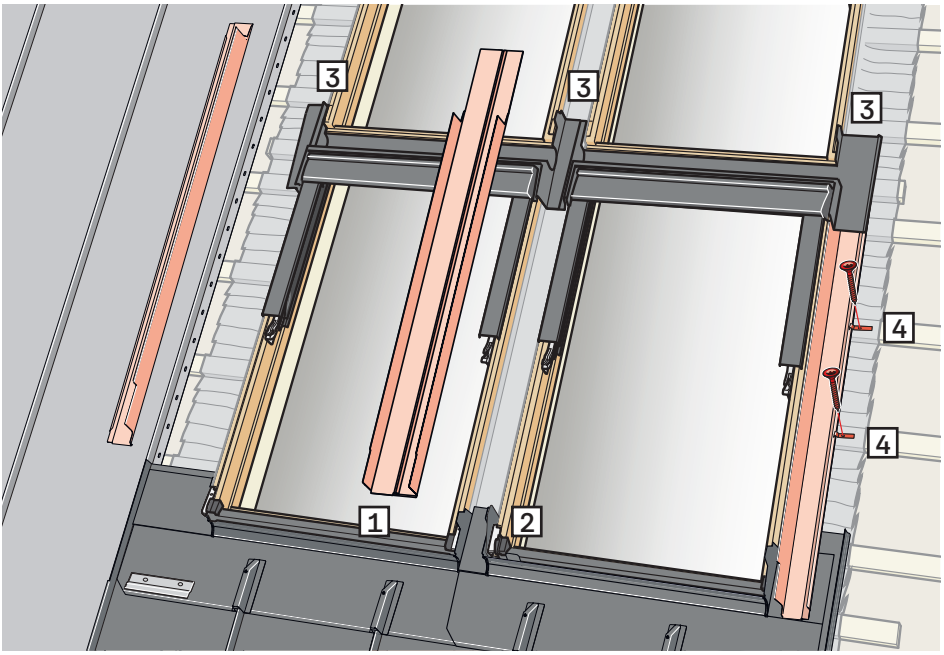

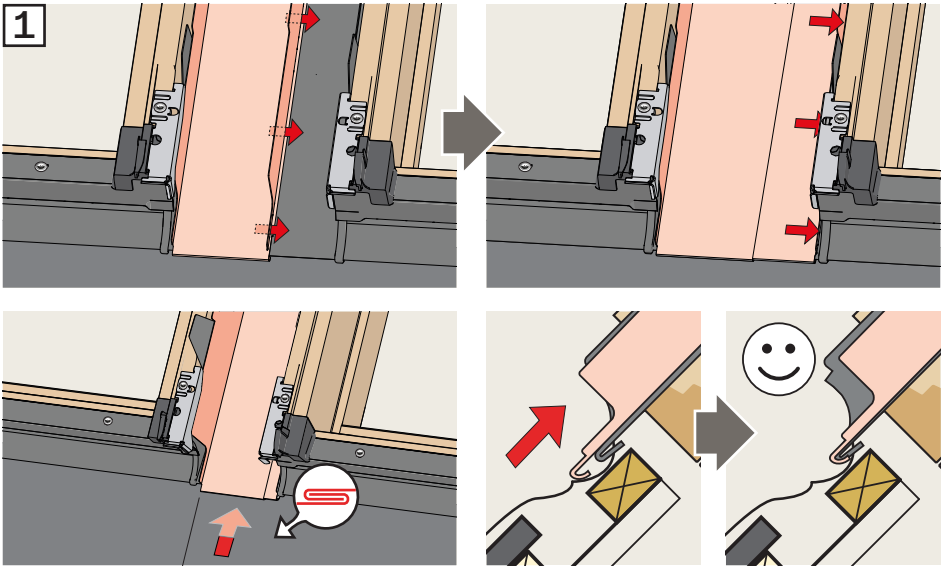

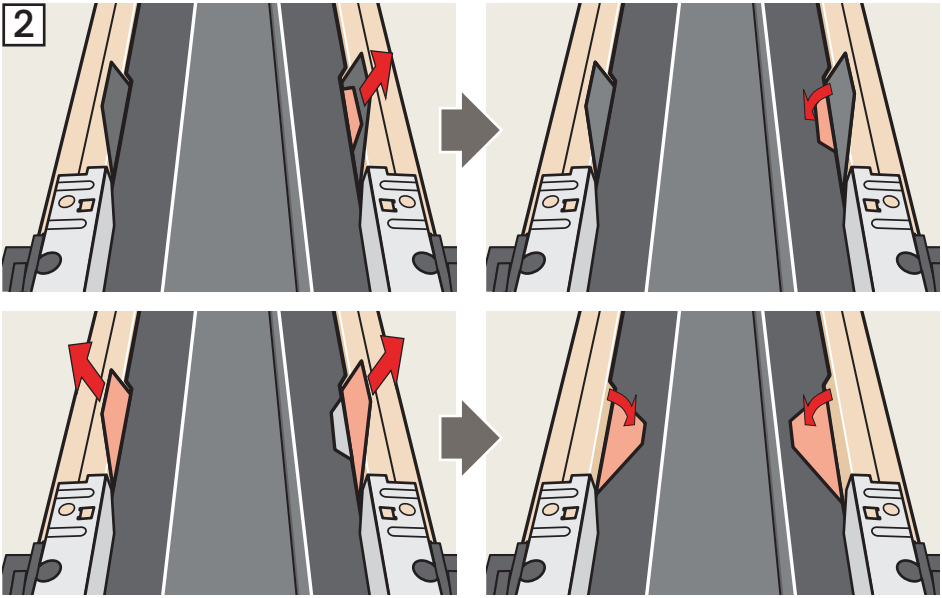
2

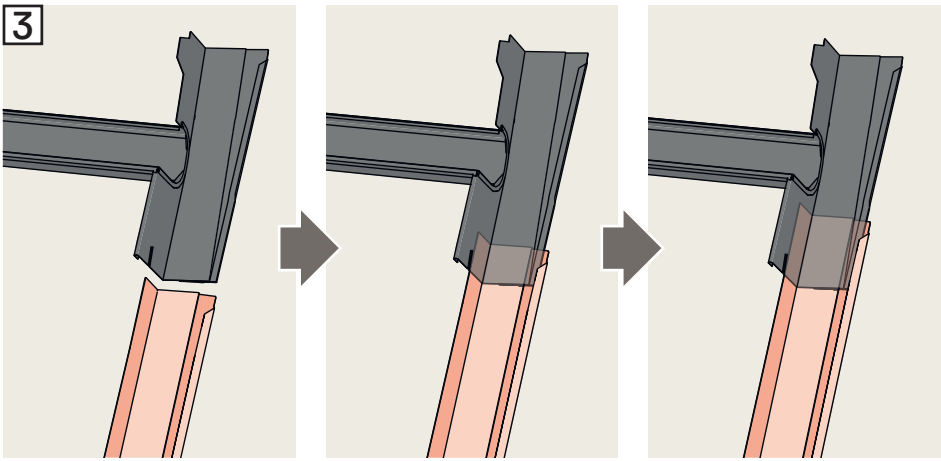
3

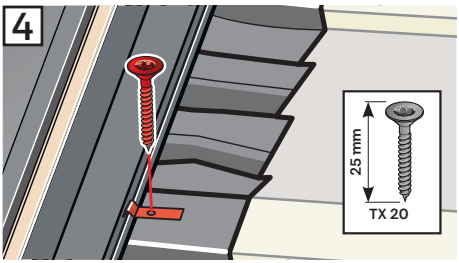
4
25 mm
TX 20

32

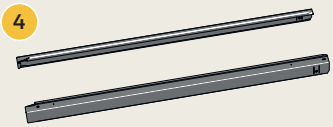

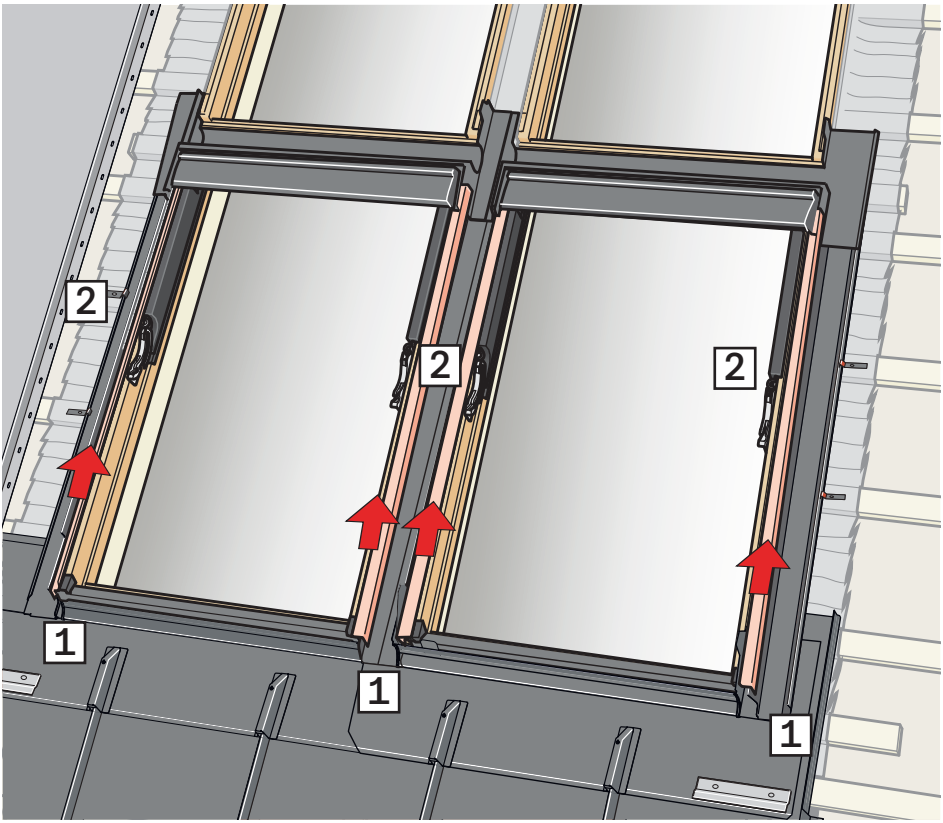

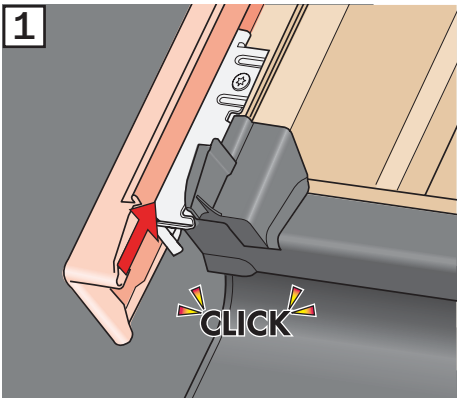

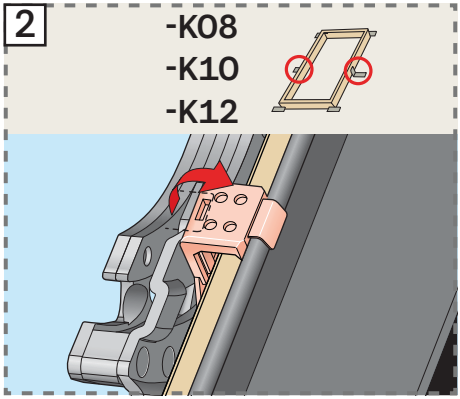

33

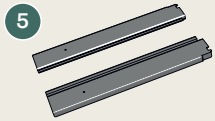

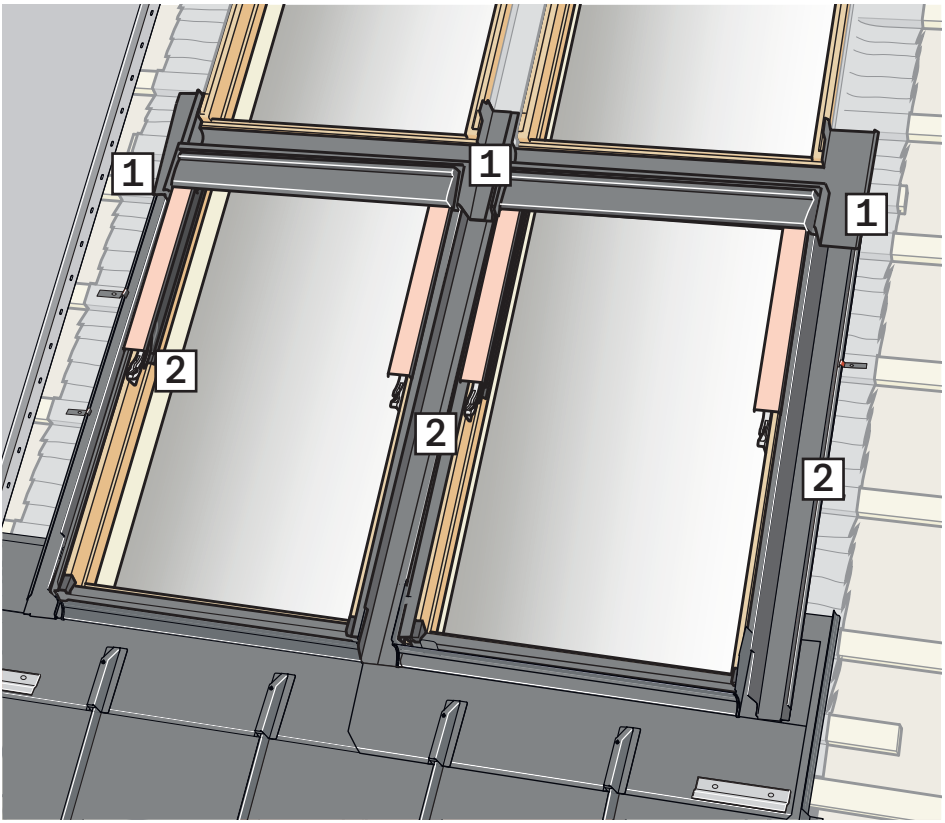

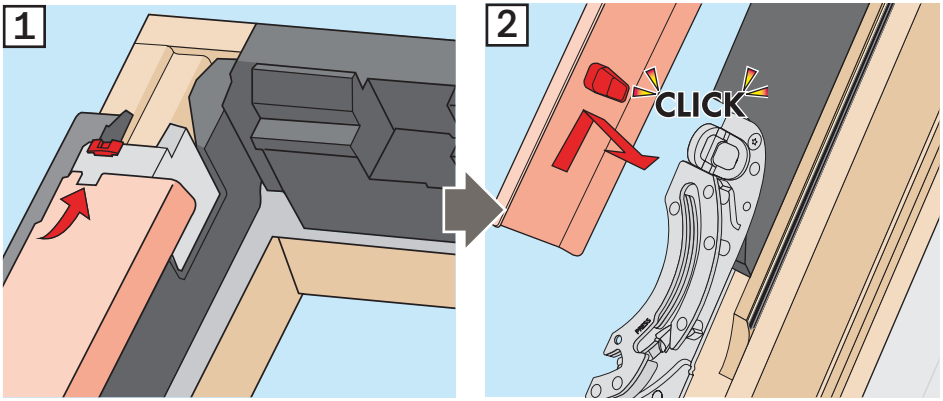

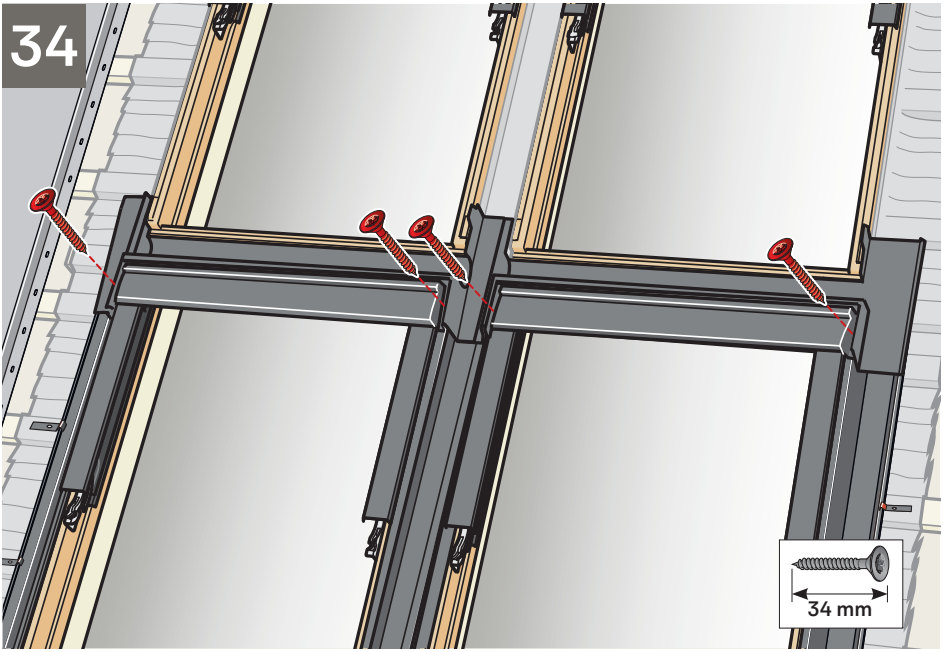

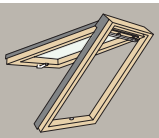

GPL / GPU / GTL / GTU / GDL

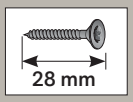

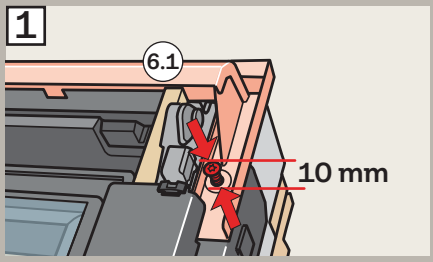

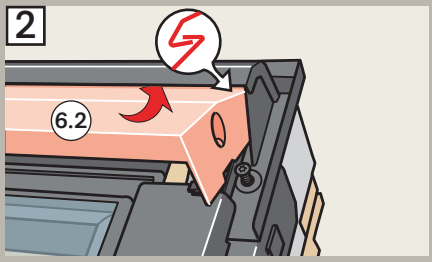

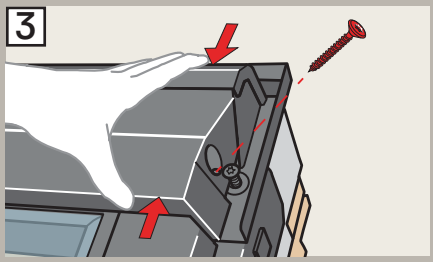

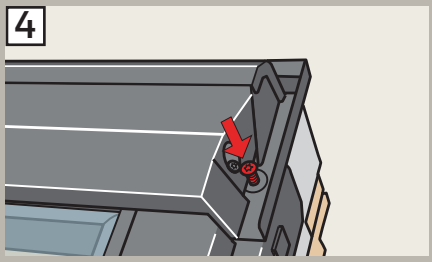

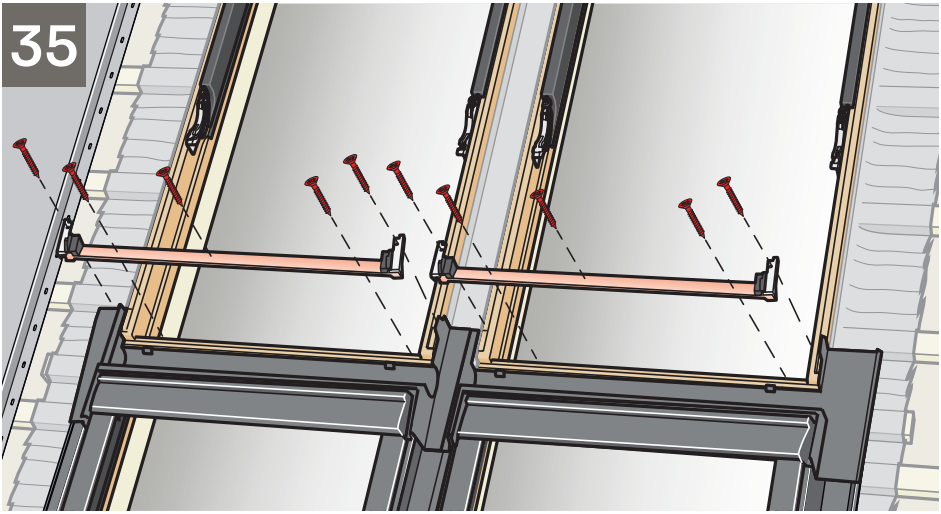
35

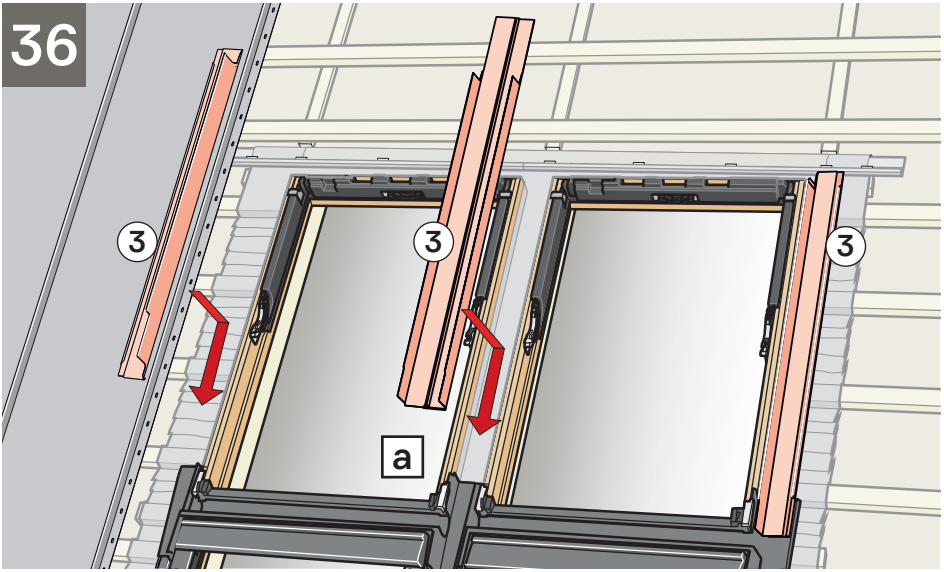
36
3
3
3
a

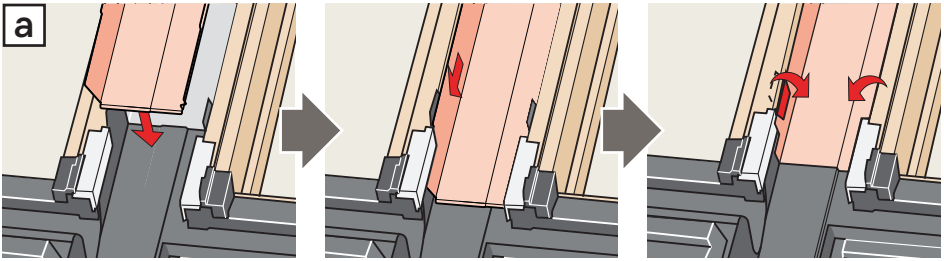
a

37

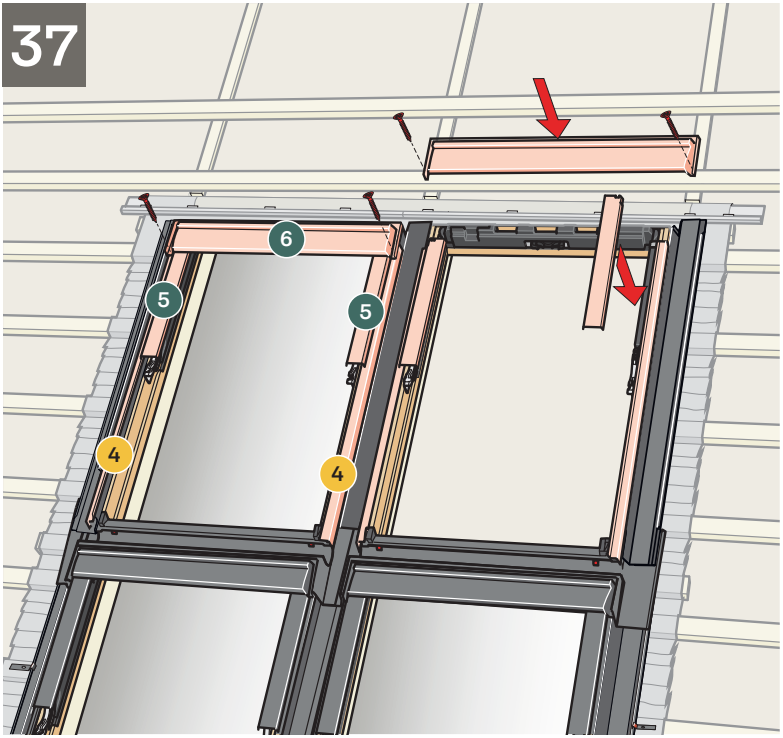

33

34

35

38

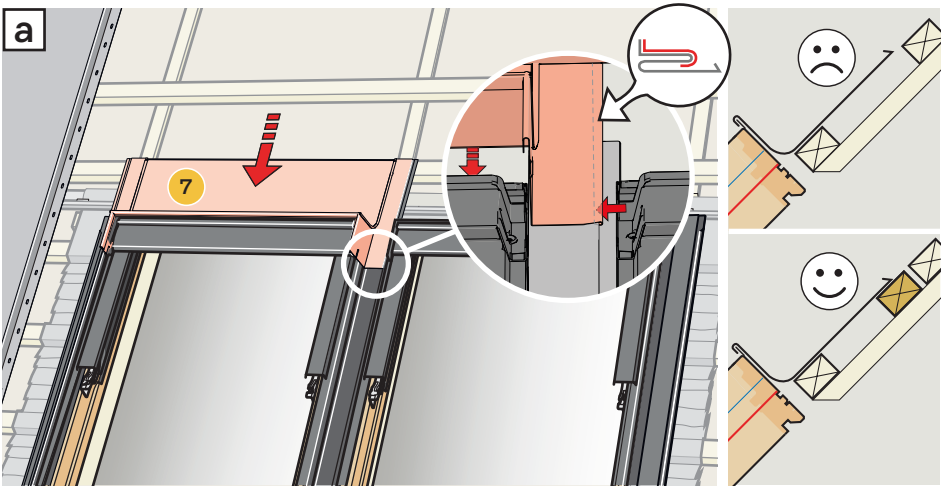

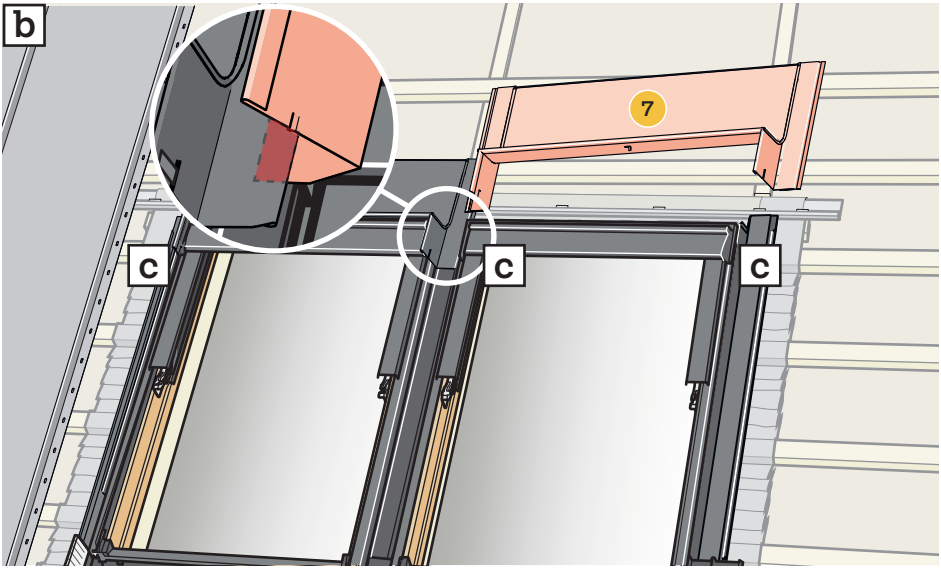
b
7
c
c
c

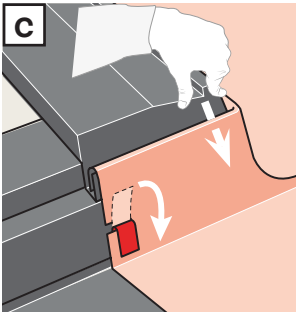
c

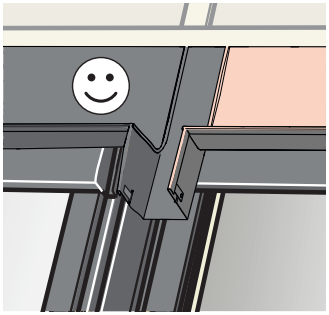

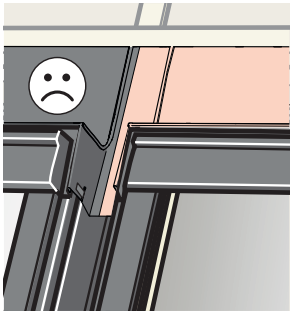

ZZZ 272 WK08 - For height: 01, 02, 04, 06, 08
ZZZ 272 WK12 - For height: 10, 12

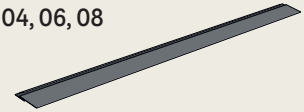

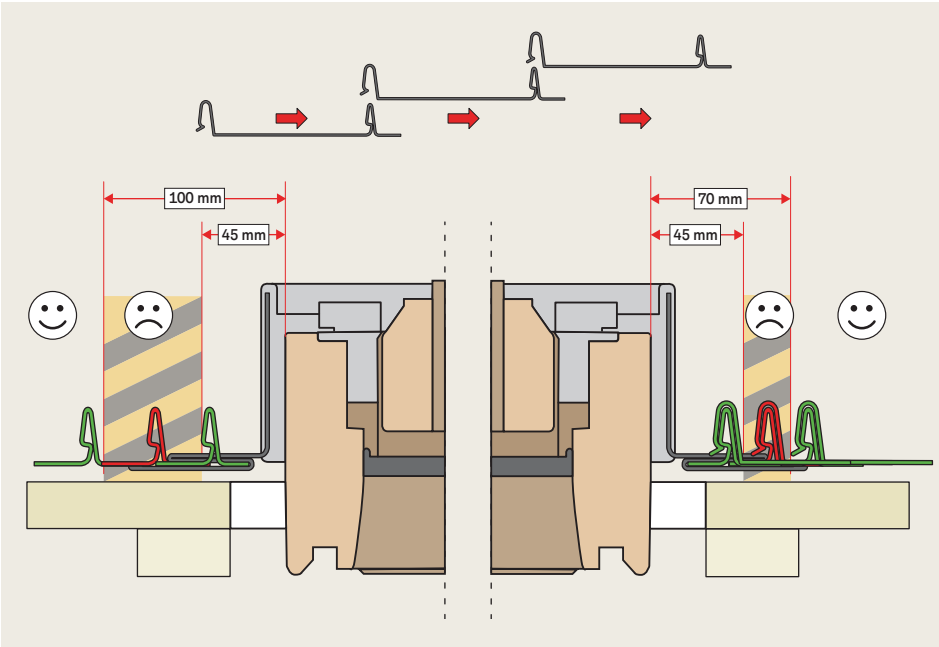

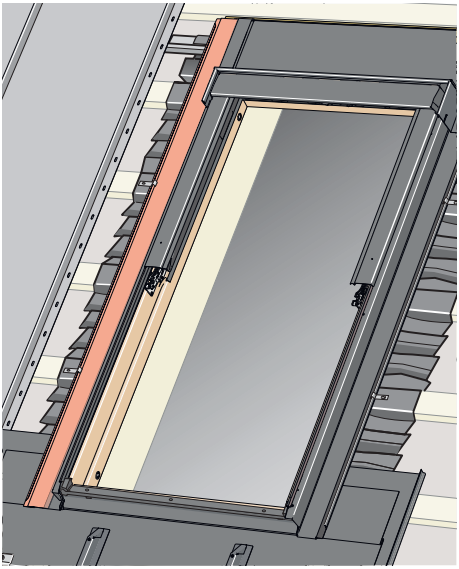

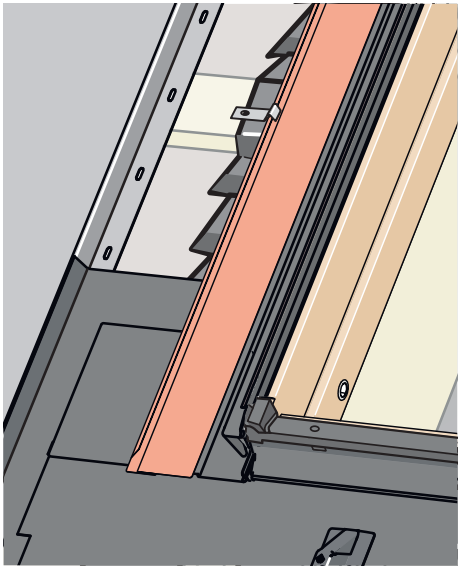

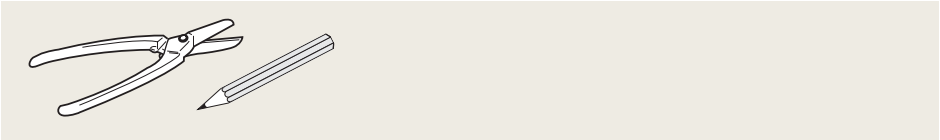

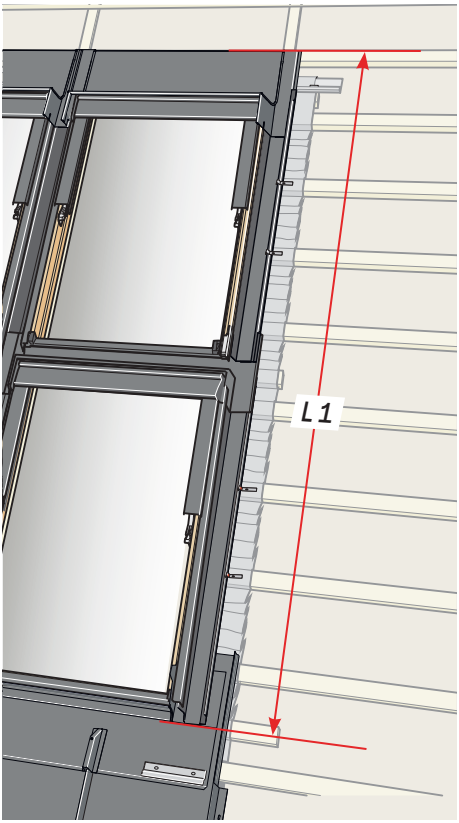
L 1

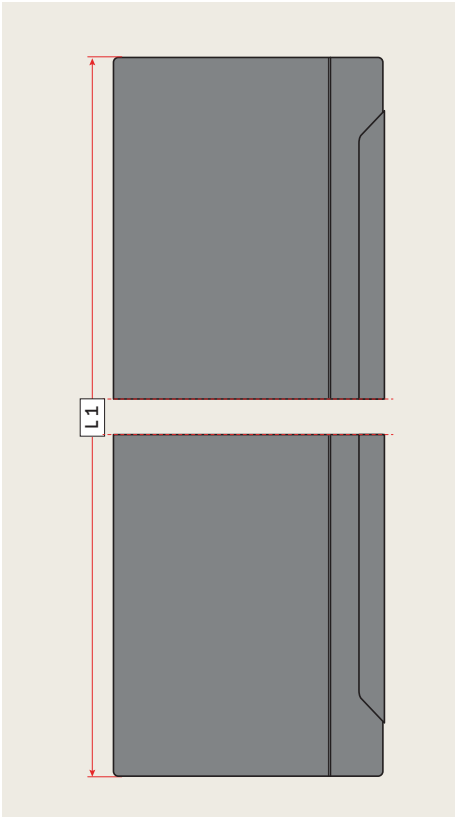
L 1

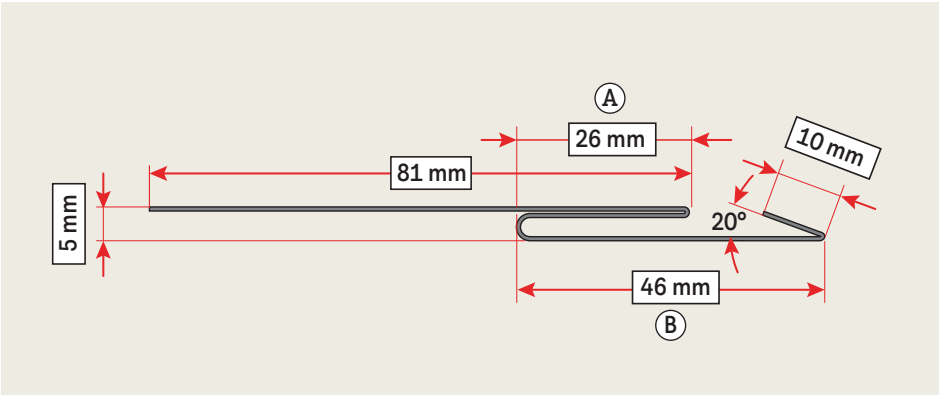
A
26 mm
10 mm
81 mm
5 mm
20°
46 mm
B

41

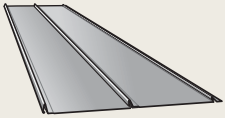

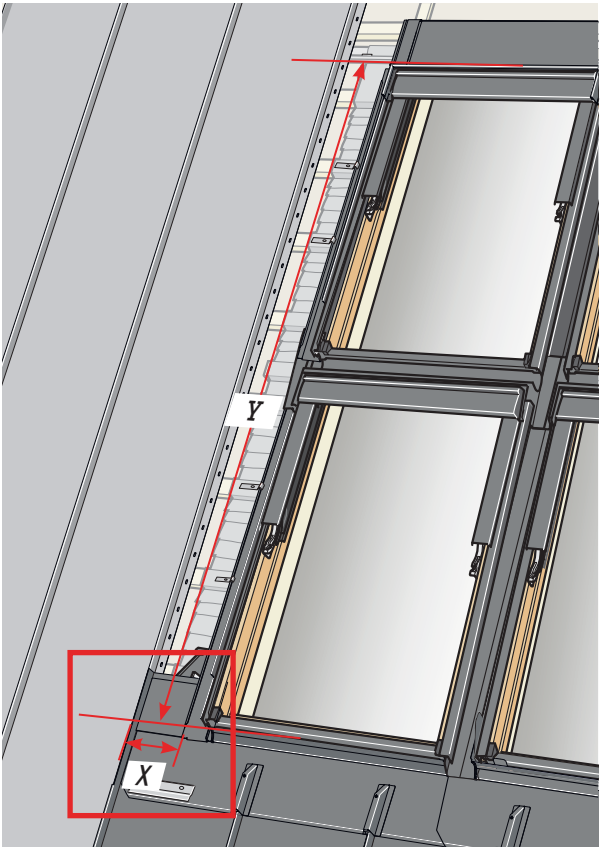

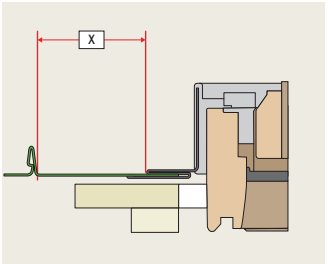

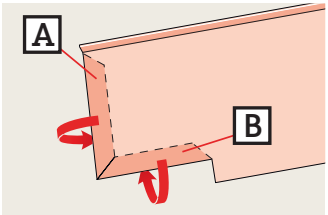

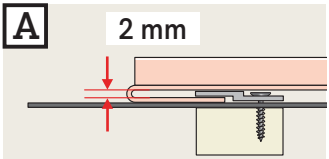

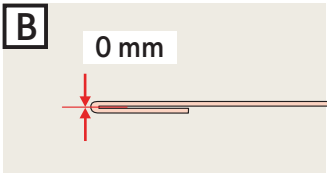

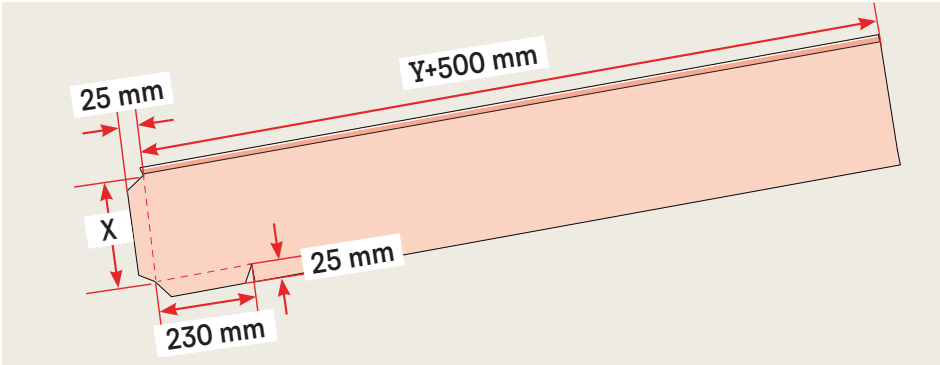

42

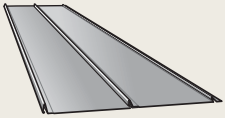

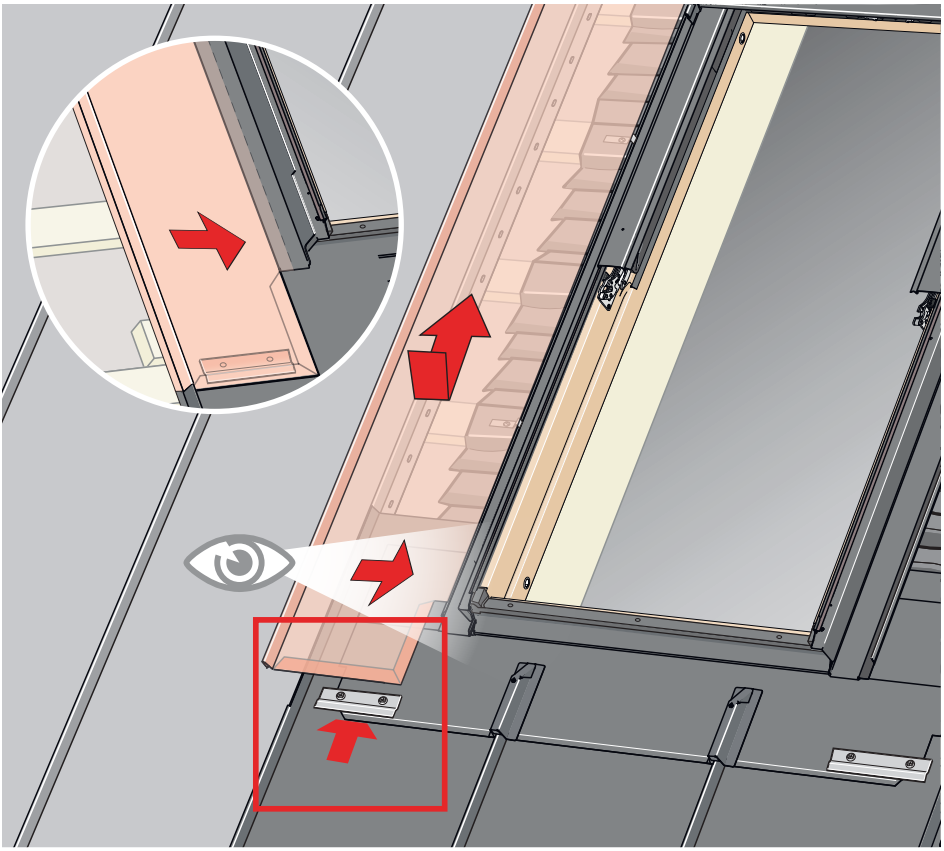

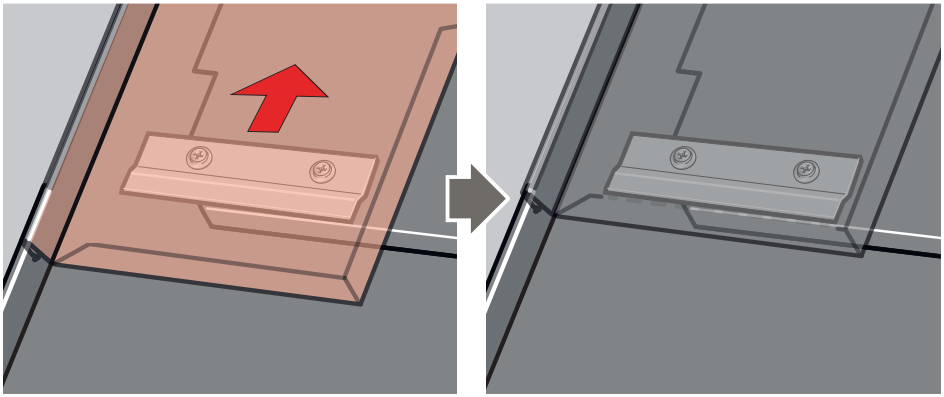

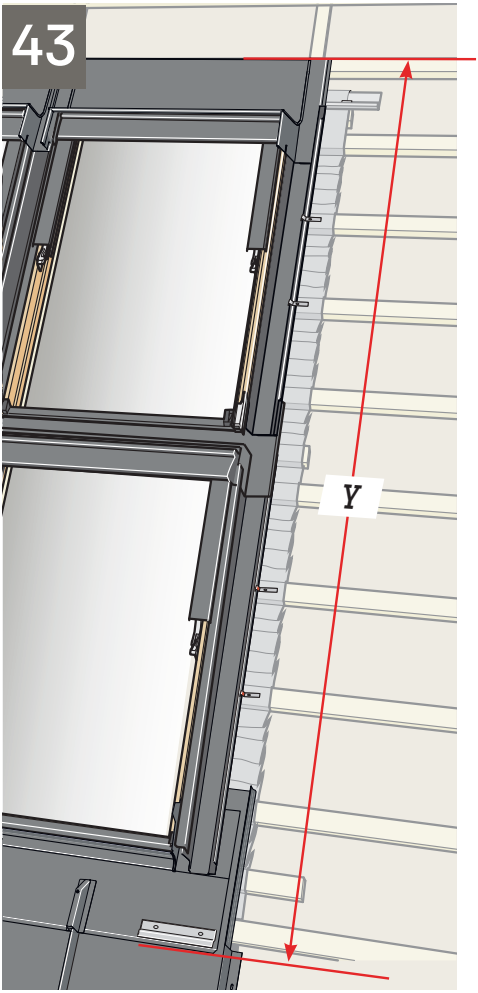
43
Y

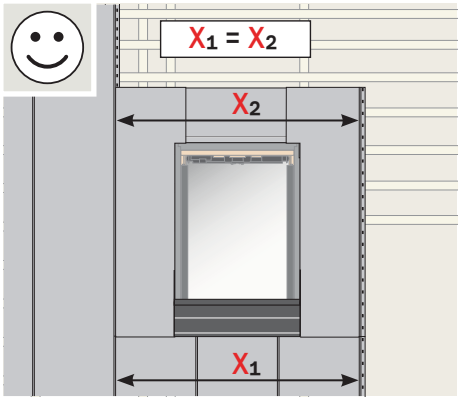
X1 = X2
X2
X1

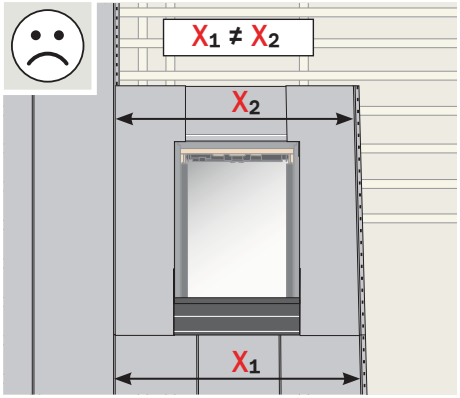
X1 ≠ X2
X2
X1

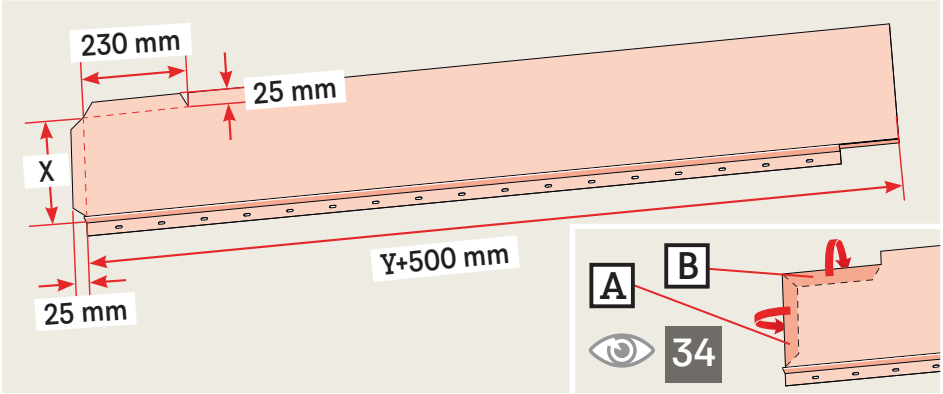
230 mm
25 mm
X
25 mm
Y+500 mm
A
B
34

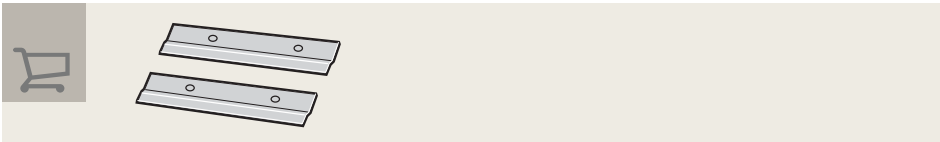

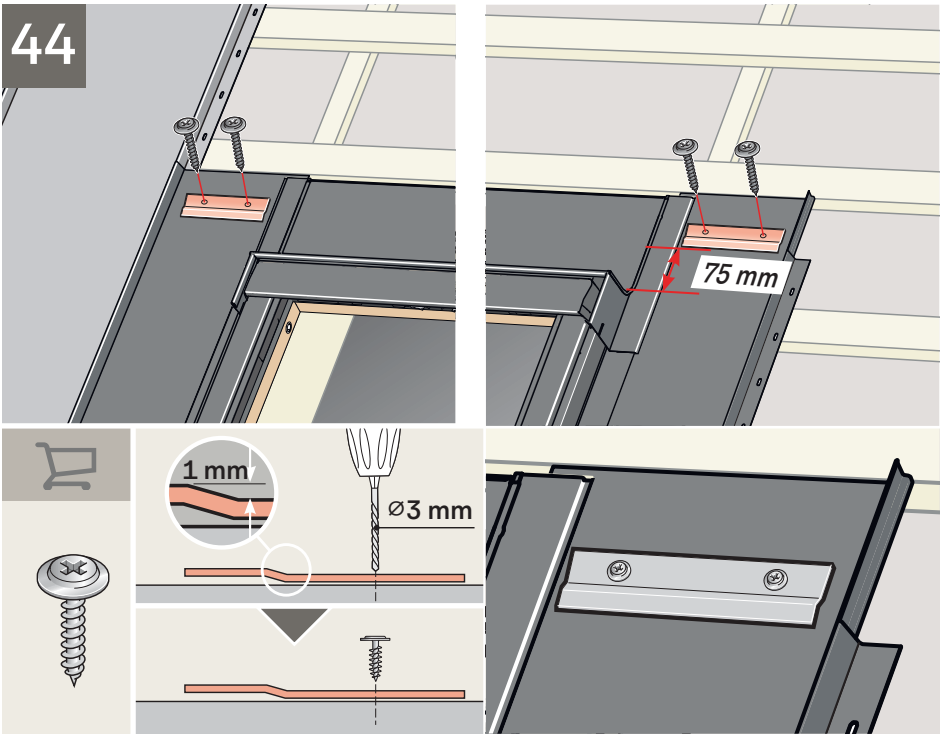
44
75 mm
1 mm
⌀3 mm

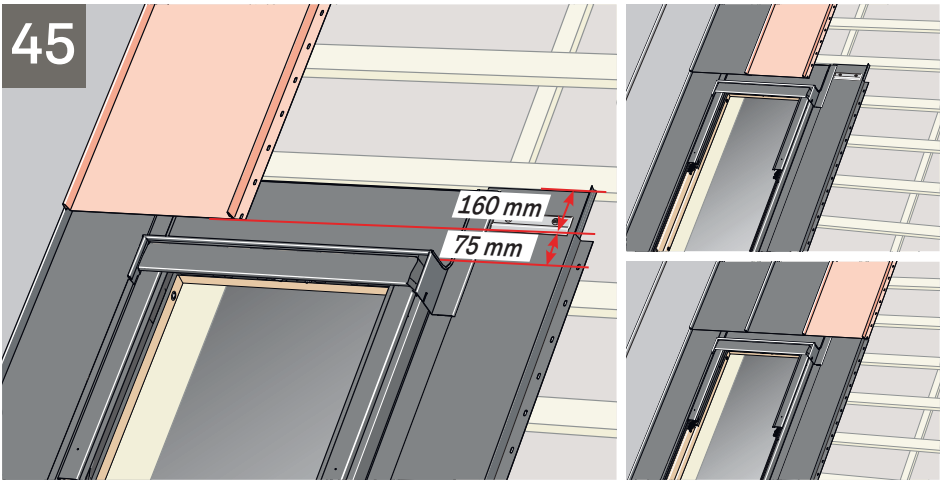
45
160 mm
75 mm

AR: VELUX Export (VELUX A/S)
+ 45 4516 7885

AT: VELUX Österreich GmbH
02245/32 3 50

AU: VELUX Australia Pty. Ltd.
1300 859 856

BA: VELUX Bosna i Hercegovina d.o.o.
033/626 493, 626 494

BE: VELUX Belgium
(010) 42.09.09

BG: ВЕЛУКС България ЕООД
02/955 99 30

CA: VELUX Canada Inc.
1 800 88-VELUX (888-3589)

CH: VELUX Schweiz AG
062 289 44 45

CL: VELUX Export (VELUX A/S)
+ 45 4516 7885

CN: VELUX (CHINA) CO. LTD.
0316-607 27 27

CZ: VELUX Česká republika, s.r.o.
531 015 511

DE: VELUX Deutschland GmbH
www.velux.de/kontakt

DK: VELUX Danmark A/S
45 16 45 16

EE: VELUX Eesti OÜ
621 7790

ES: VELUX Spain, S.A.U.
91 509 71 00

FI: VELUX Suomi Oy
0207 290 800

FR: VELUX France
0806 80 15 15
Service gratuit + prix appel

GB: VELUX Company Ltd.
01592 778 225

HR: VELUX Hrvatska d.o.o.
01/5555 444

HU: VELUX Magyarország Kft.
(06/1) 436-0601

IE: VELUX Company Ltd.
01 848 8775

IT: VELUX Italia s.p.a.
045/6173666

JP: VELUX-Japan Ltd.
0570-00-8141

KR: VELUX Export (VELUX A/S)
+ 45 4516 7885

LT: VELUX Lietuva, UAB
(85) 270 91 01

LV: VELUX Latvia SIA
67 27 77 33

NL: VELUX Nederland B.V.
030 - 6 629 629

NO: VELUX Norge AS
22 51 06 00

NZ: VELUX New Zealand Ltd.
0800 650 445

PL: VELUX Polska Sp. z o.o.
(022) 33 77 000 / 33 77 070

PT: VELUX Portugal, Lda
21 880 00 60

RO: VELUX România S.R.L.
0268-402740

RS: VELUX Srbija d.o.o.
011 20 57 500

SE: VELUX Svenska AB
042/20 83 80

SI: VELUX Slovenija d.o.o.
01 724 68 68

SK: VELUX Slovensko, s.r.o.
(02) 33 000 555

TR: VELUX Çatı Pencereleri
Ticaret Limited Şirketi
0 216 302 54 10

UA: ТОВ "ВЕЛЮКС Україна"
(044) 2916070

US: VELUX America LLC
1-800-88-VELUX

www.velux.com

INSTALLATION INSTRUCTIONS FOR FLASHING EKJ/EKX. © 2024 VELUX GROUP ®VELUX AND THE VELUX LOGO ARE REGISTERED TRADEMARKS USED UNDER LICENCE BY THE VELUX GROUP