VELUX®

Commercial

HFC/HVC + ERC + ESC

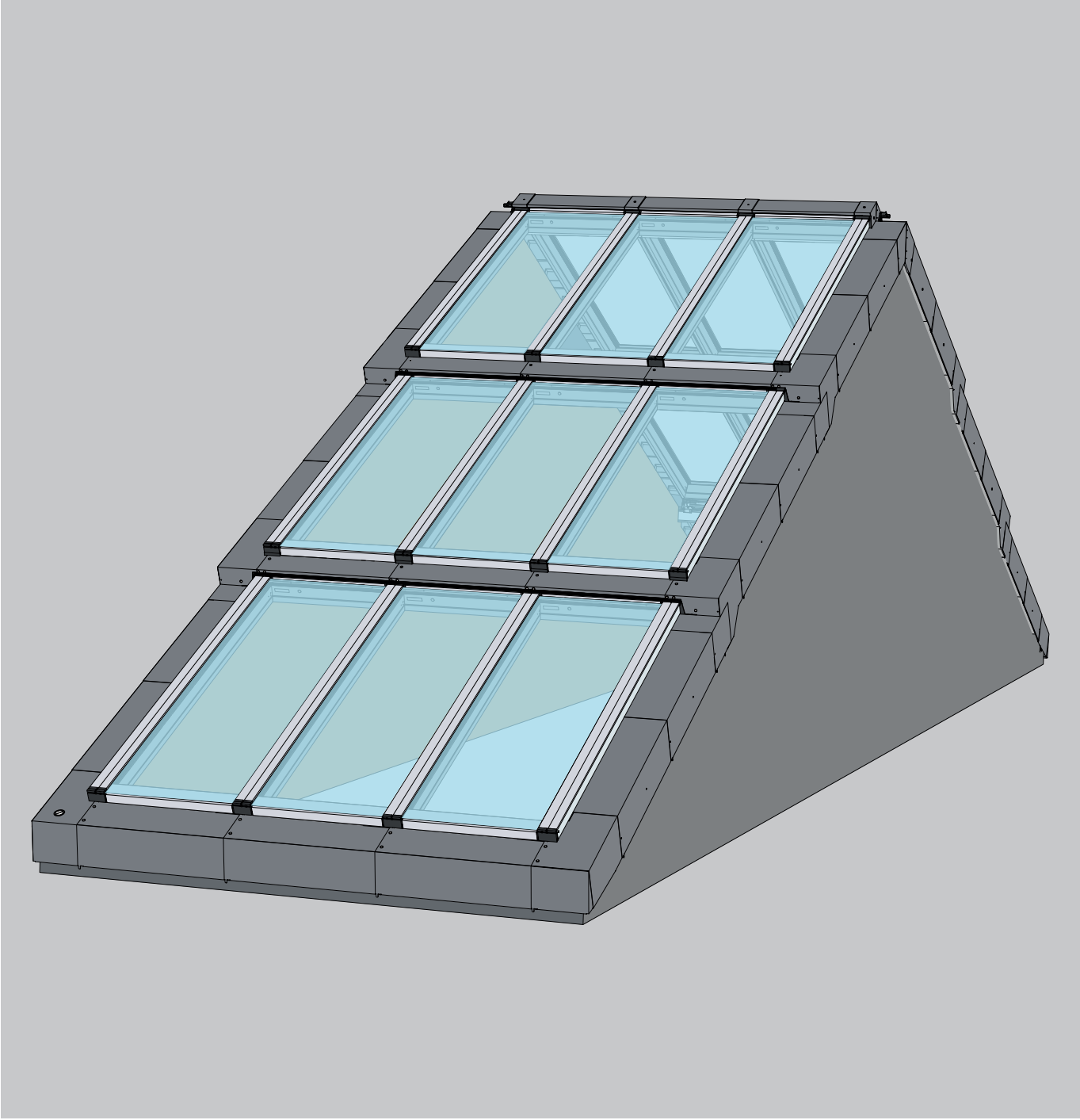



454666-2022-08

A1-R



HFC/HVC + ERC



HVC CE all

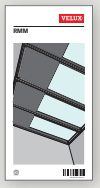

RMM

A2-R

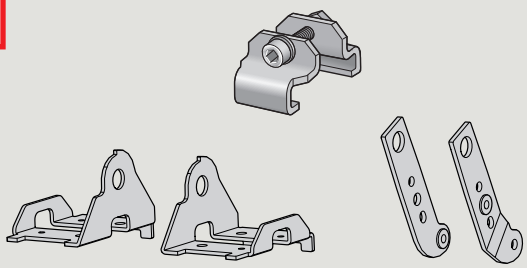

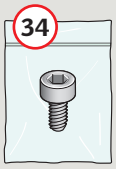

M8 x 10 mm



Ø8

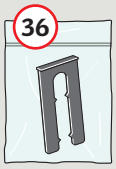

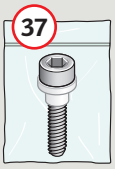

M8 x 30 mm

A3-R

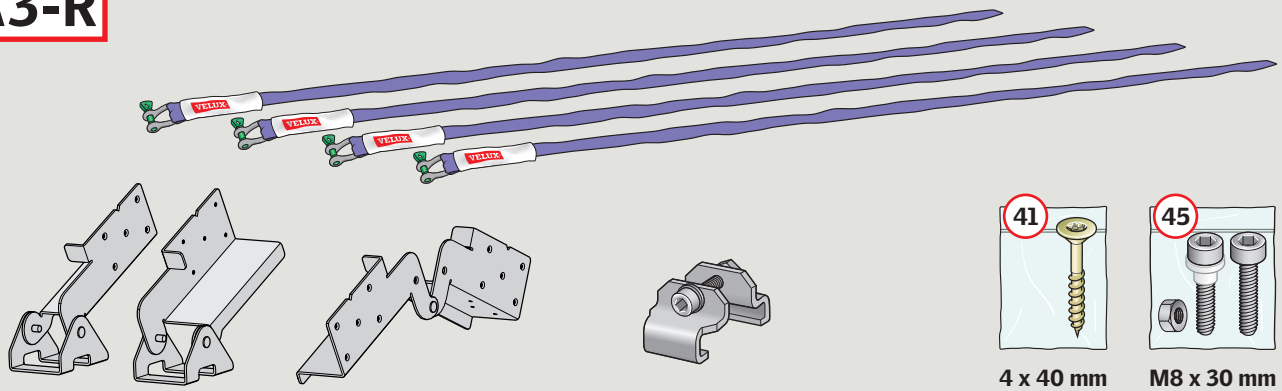

4 x 40 mm

M8 x 30 mm

A4-R

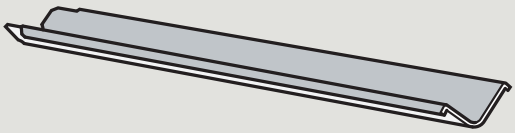

B1-R

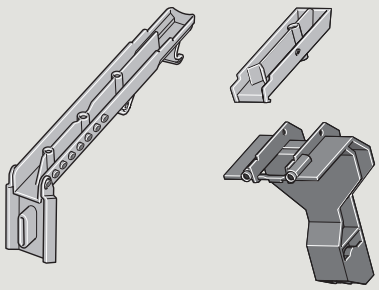



5,5 x 27 mm

B2-R

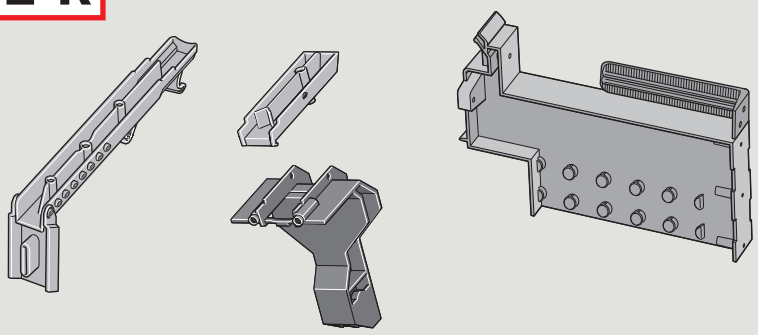



5,5 x 27 mm

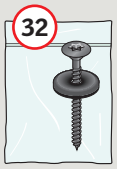

4 x 45 mm

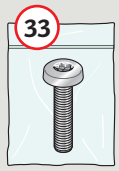

M4 x 25 mm

C1-R

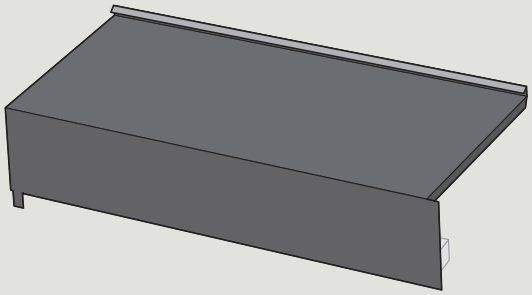

C3-R

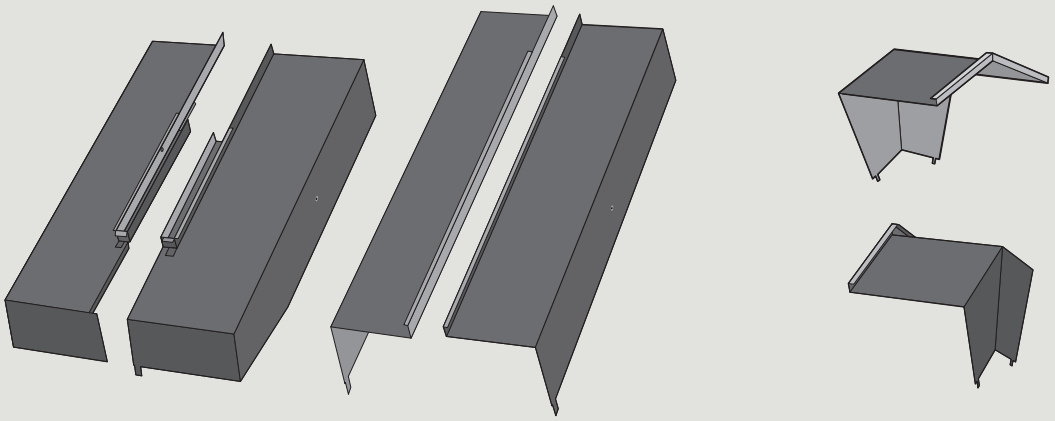

D1-R



D2-R

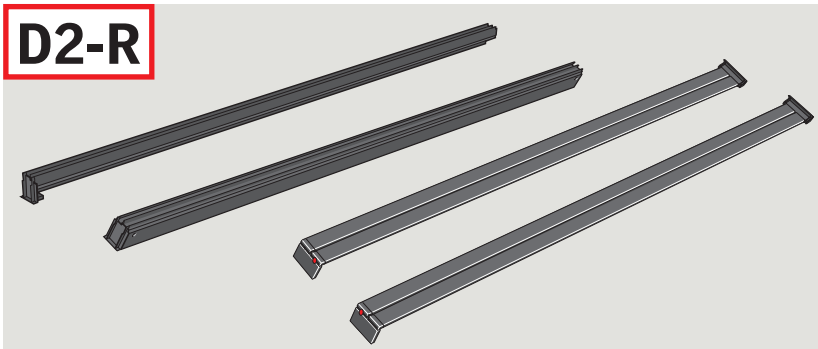

D3-R



D4-R

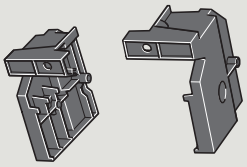

E1-R



E2-R

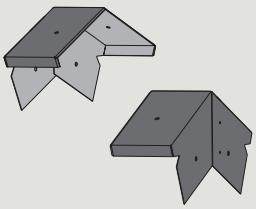

A1-S

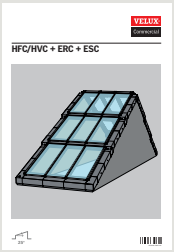

HFC/HVC + ERC + ESC

A2-S

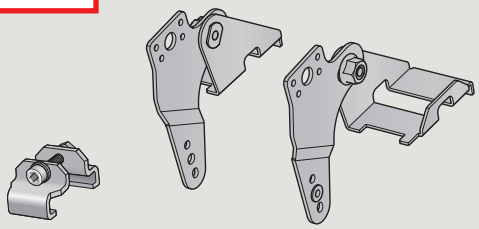

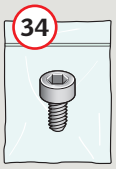

M8 x 10 mm



ø 8 mm

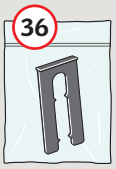

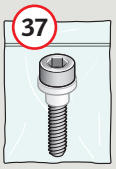

M8 x 30 mm

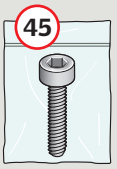

M8 x 30 mm

B1-S

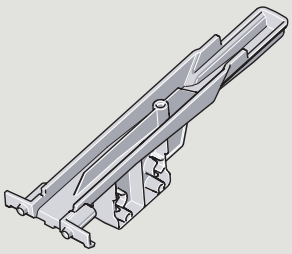

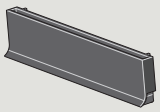



5,5 x 27 mm

B2-S

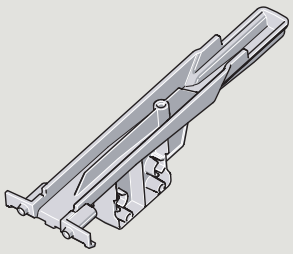

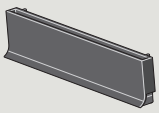

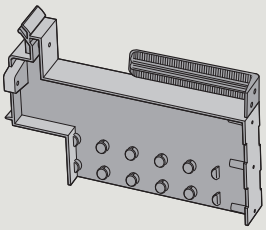



5,5 x 27 mm



4 x 45 mm

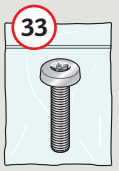

M4 x 25 mm

C3-S

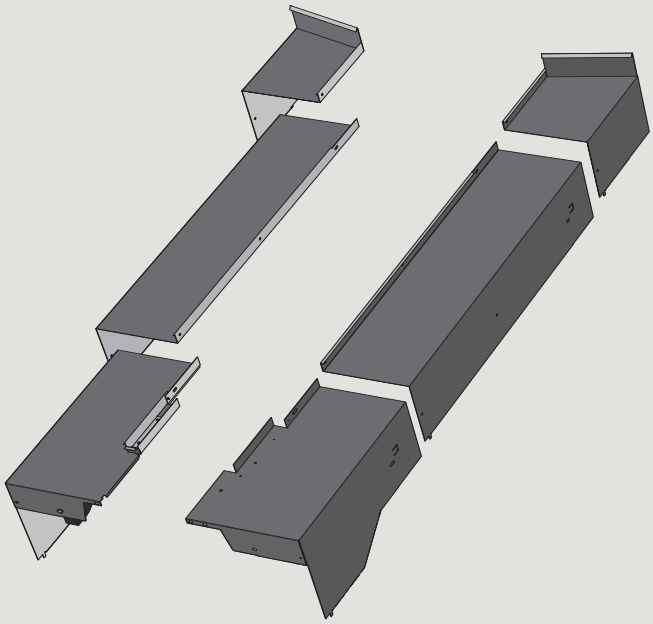

D1-S



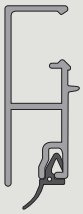

D2-S

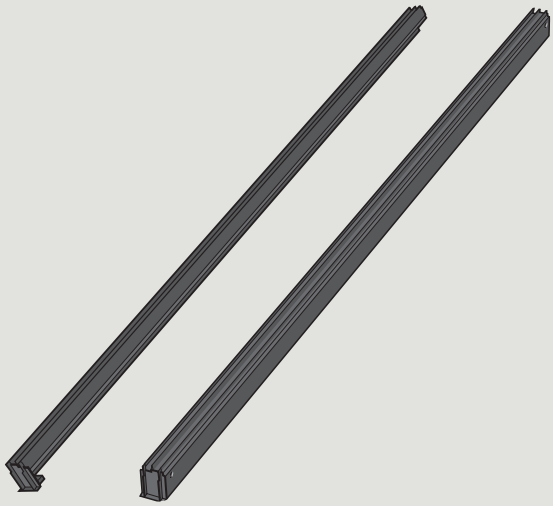

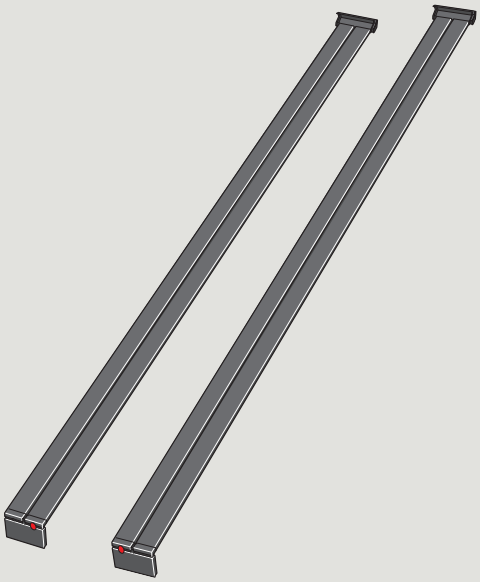

D3-S



D4-S

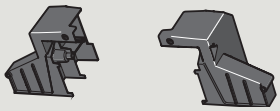

D5-S

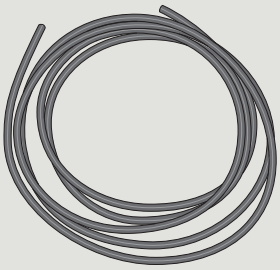



E1-S

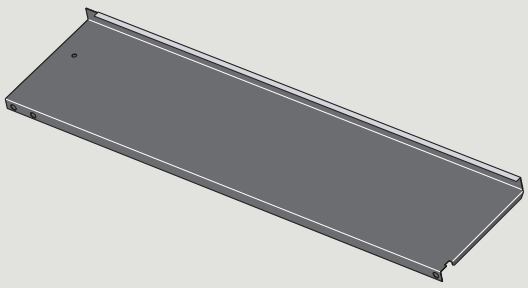



BCX



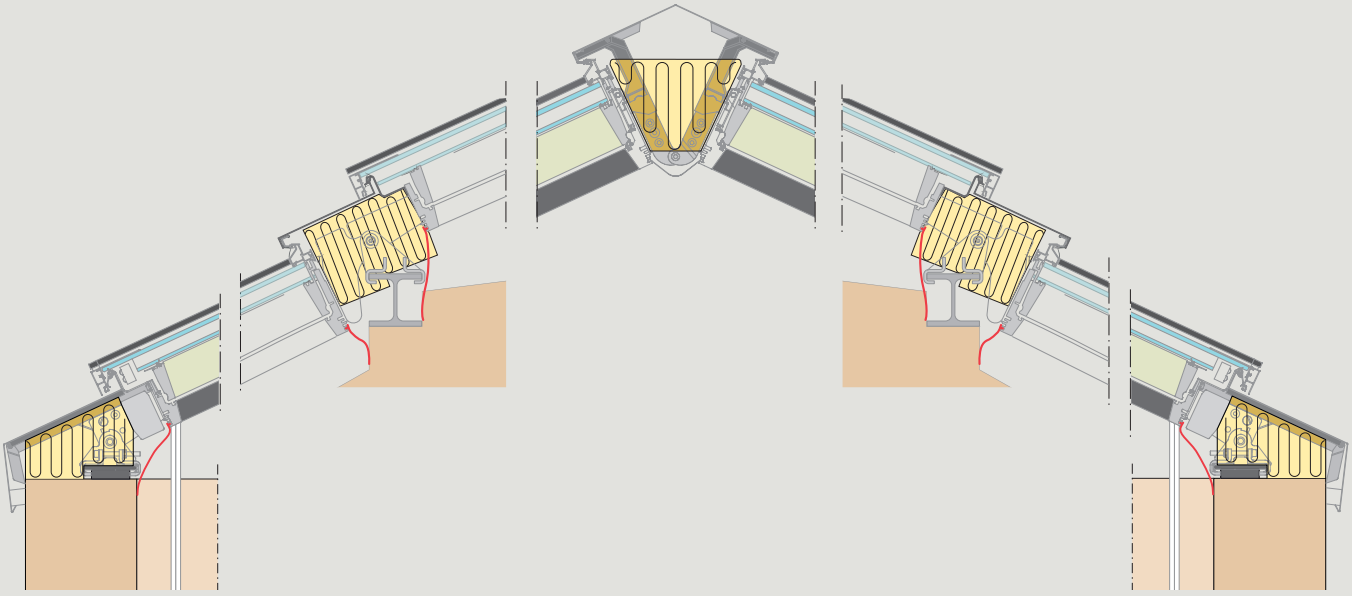

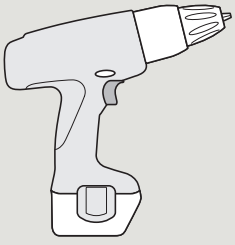

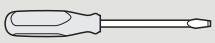

TX 20

13 mm

HEX 6

HEX 6

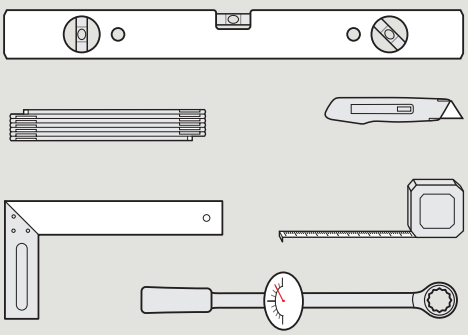

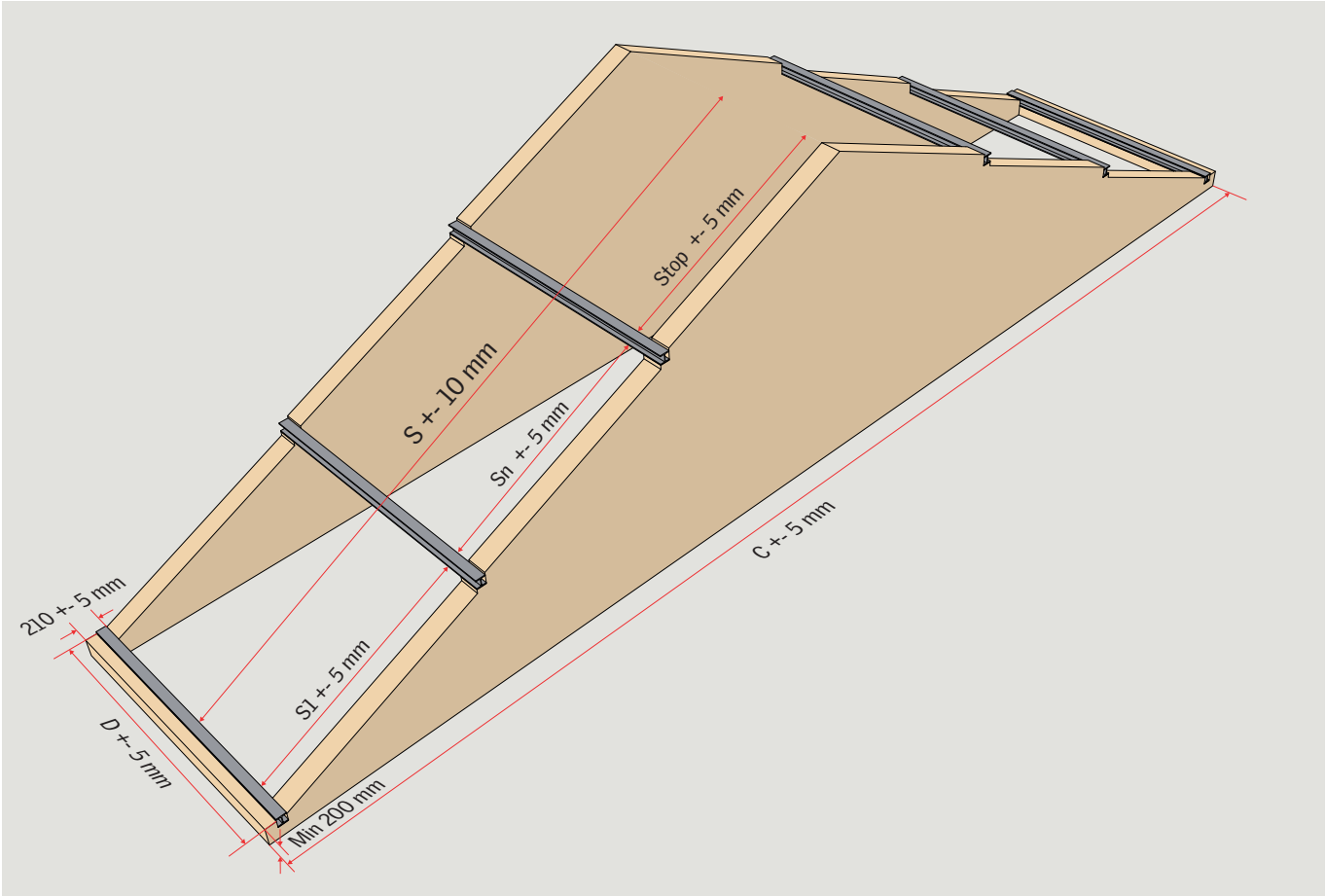

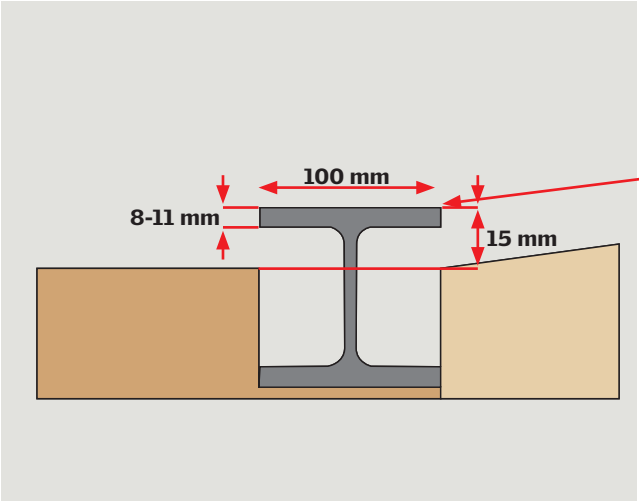

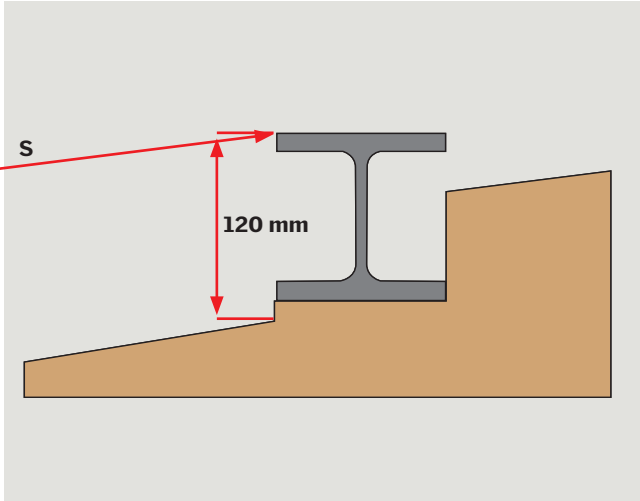

W mm / H mm / N

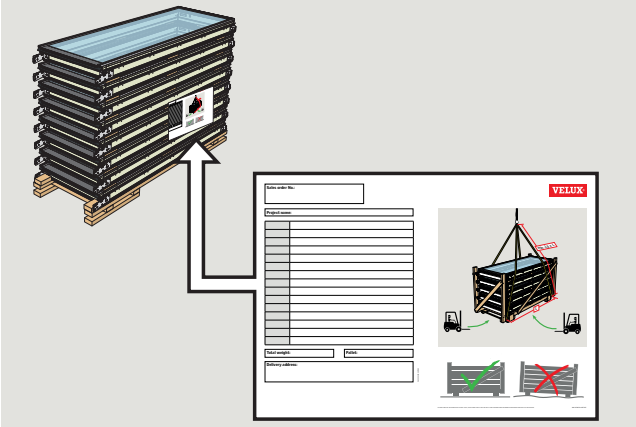

B mm / C mm / D mm / R mm / S mm / Q mm



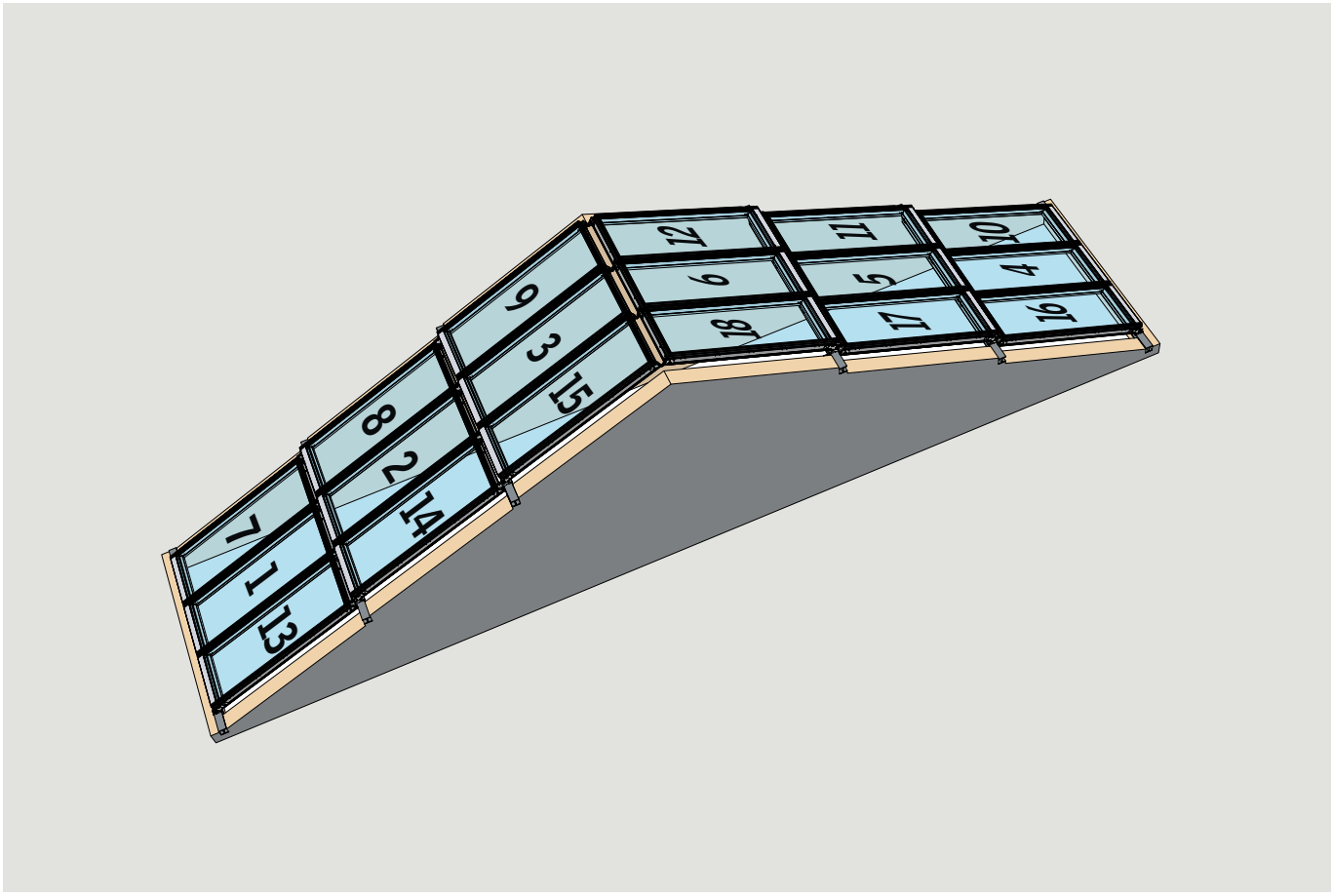
12
11
10
9
6
5
4
3
18
17
16
15
8
2
14
7
1
13

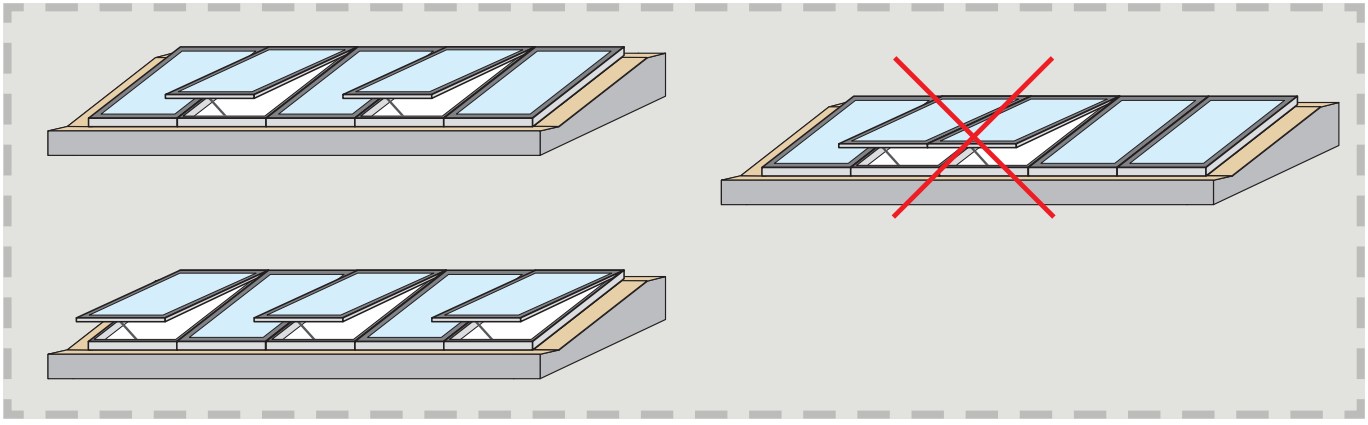

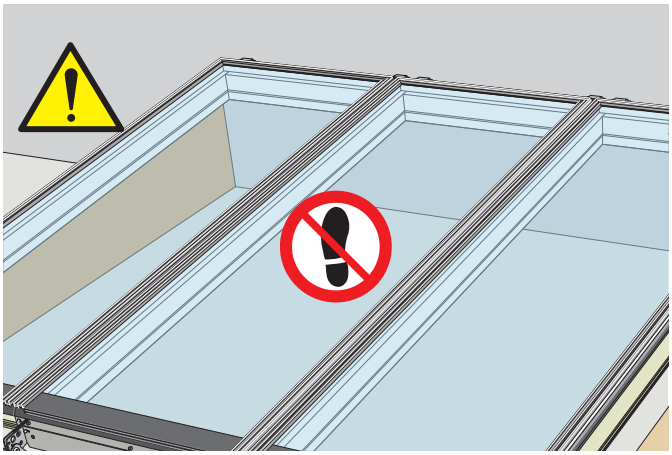

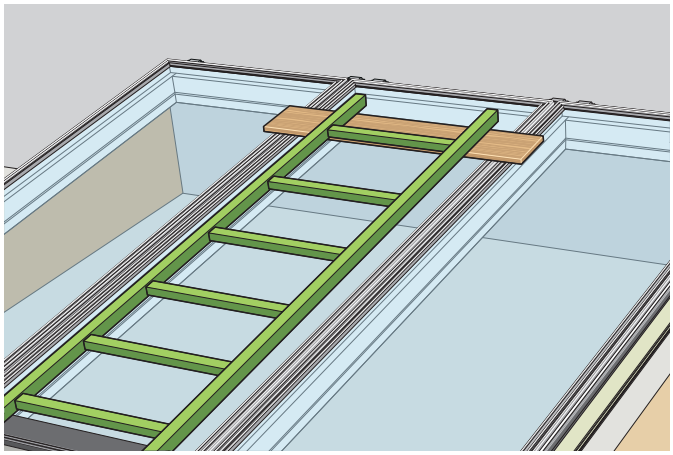

1

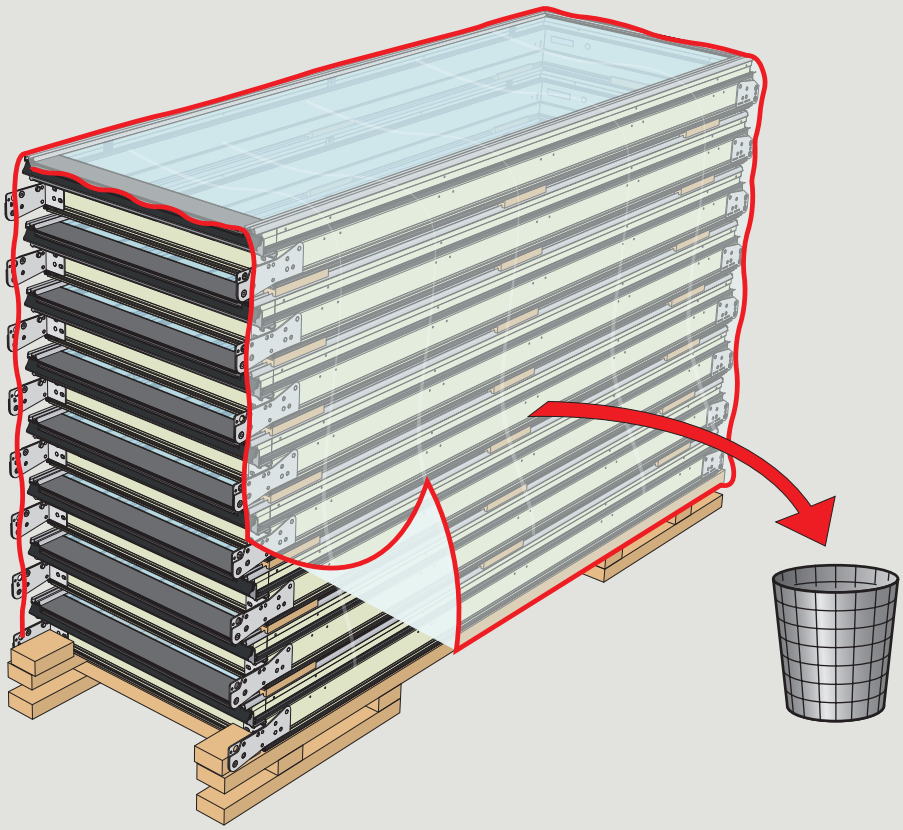

2

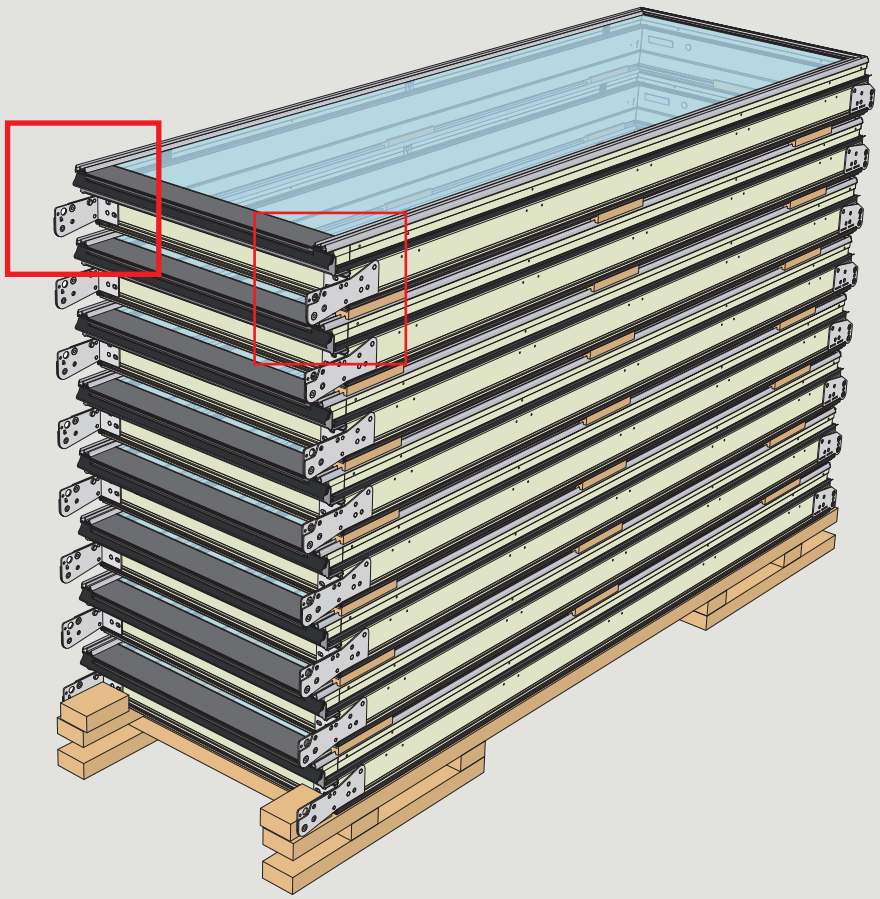

A2-R

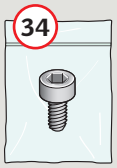

M8 x 10 mm

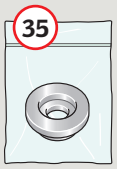

ø 8 mm

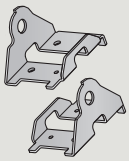

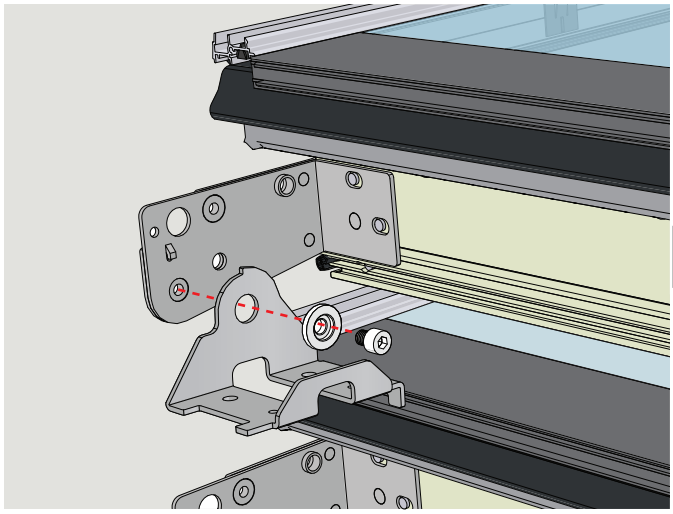

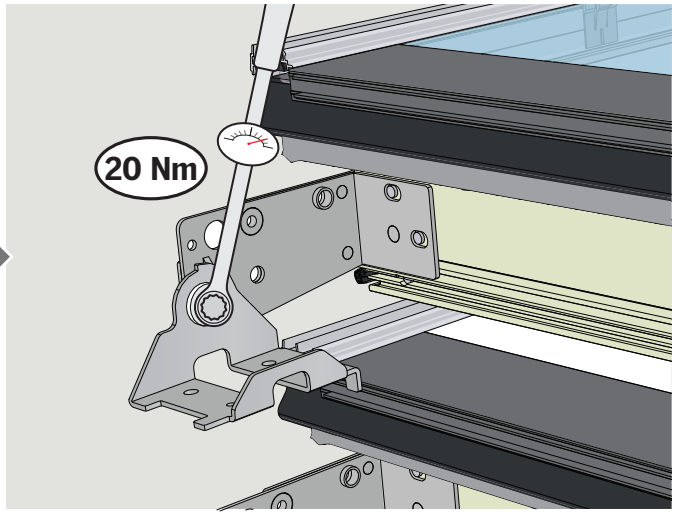

3

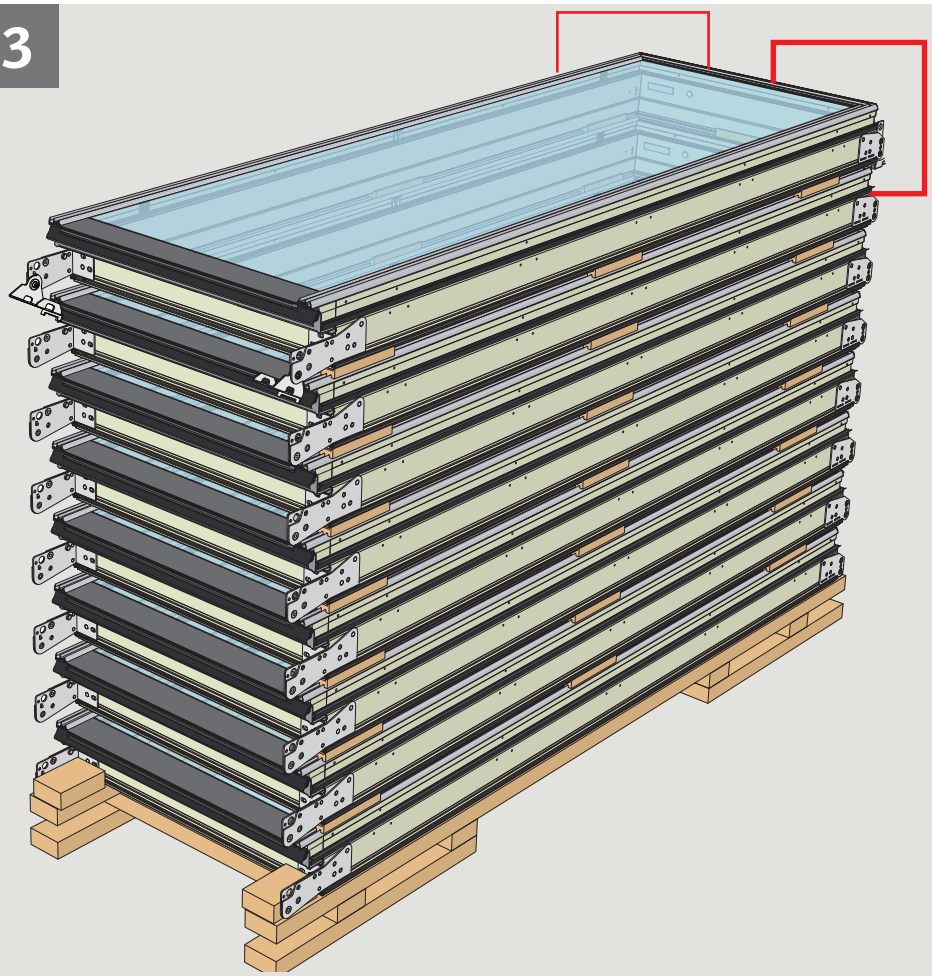

A2-S

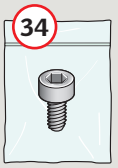

M8 x 10 mm

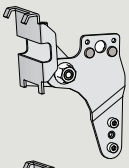

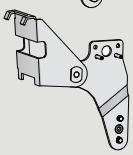

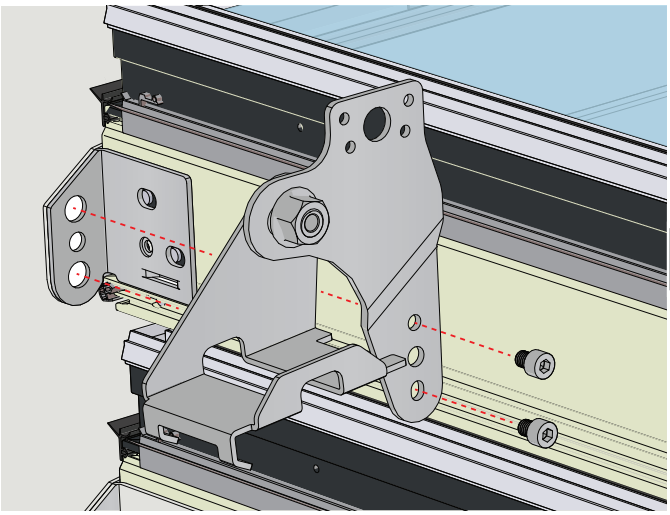

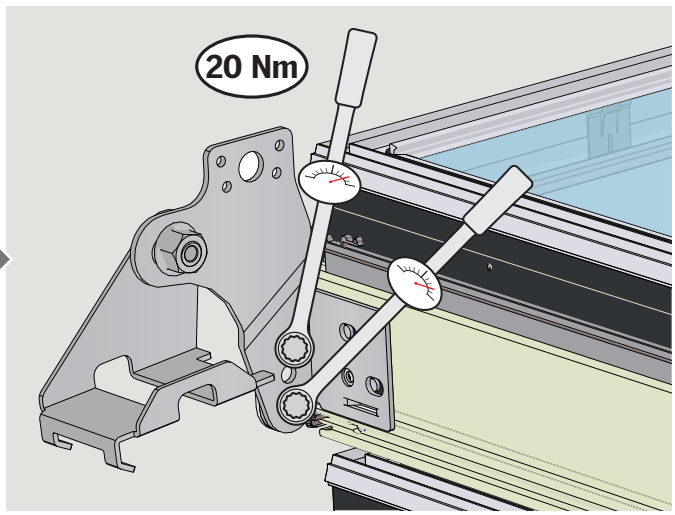

4

A3-R

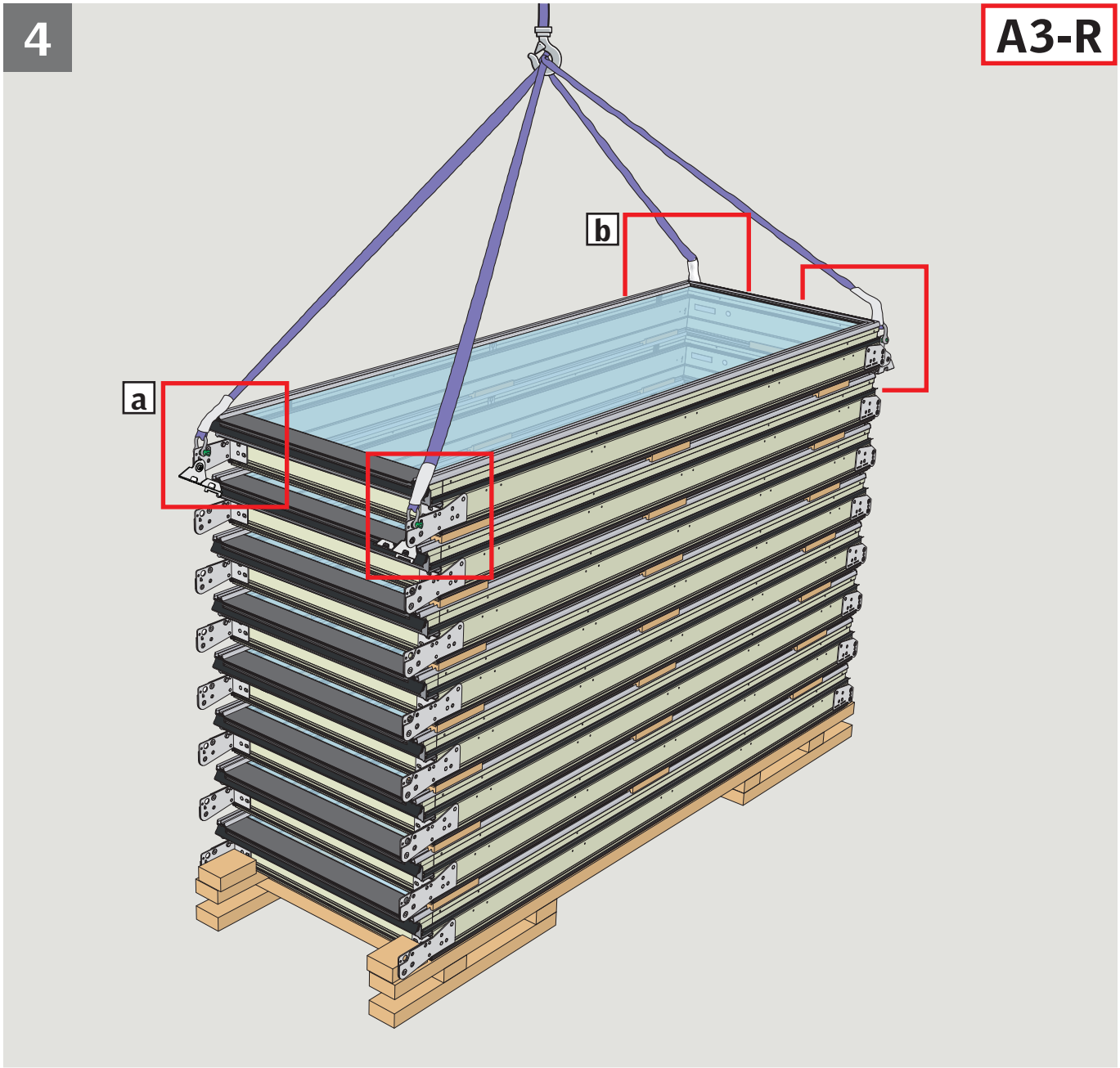

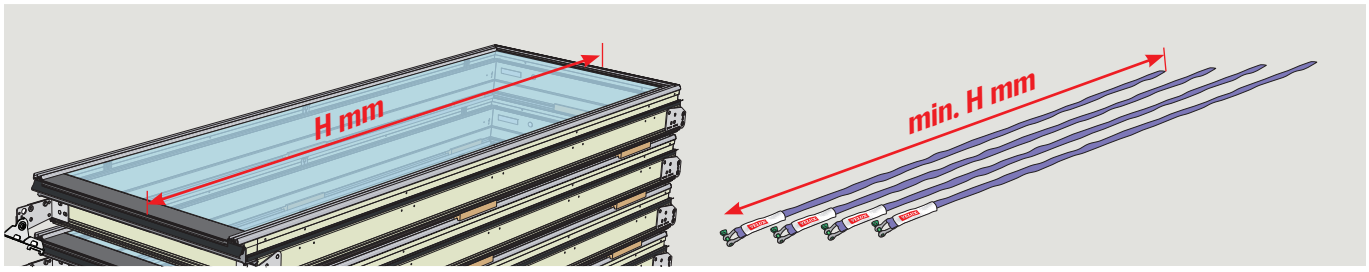

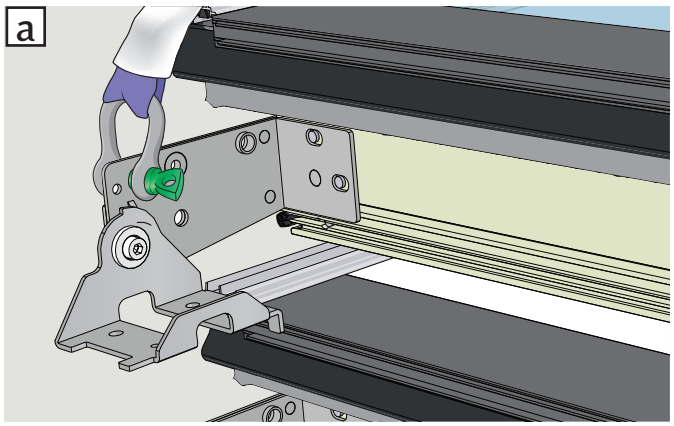

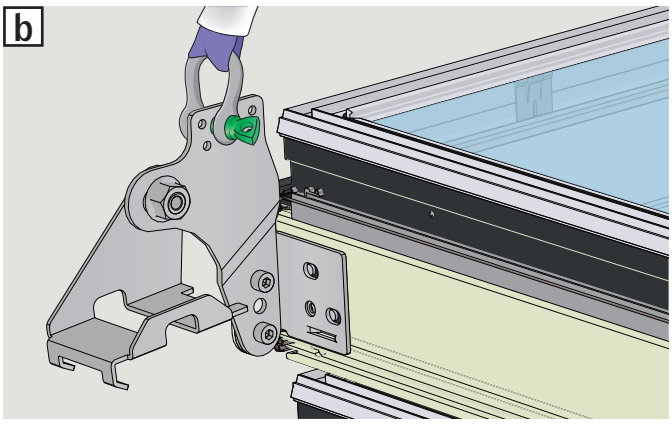

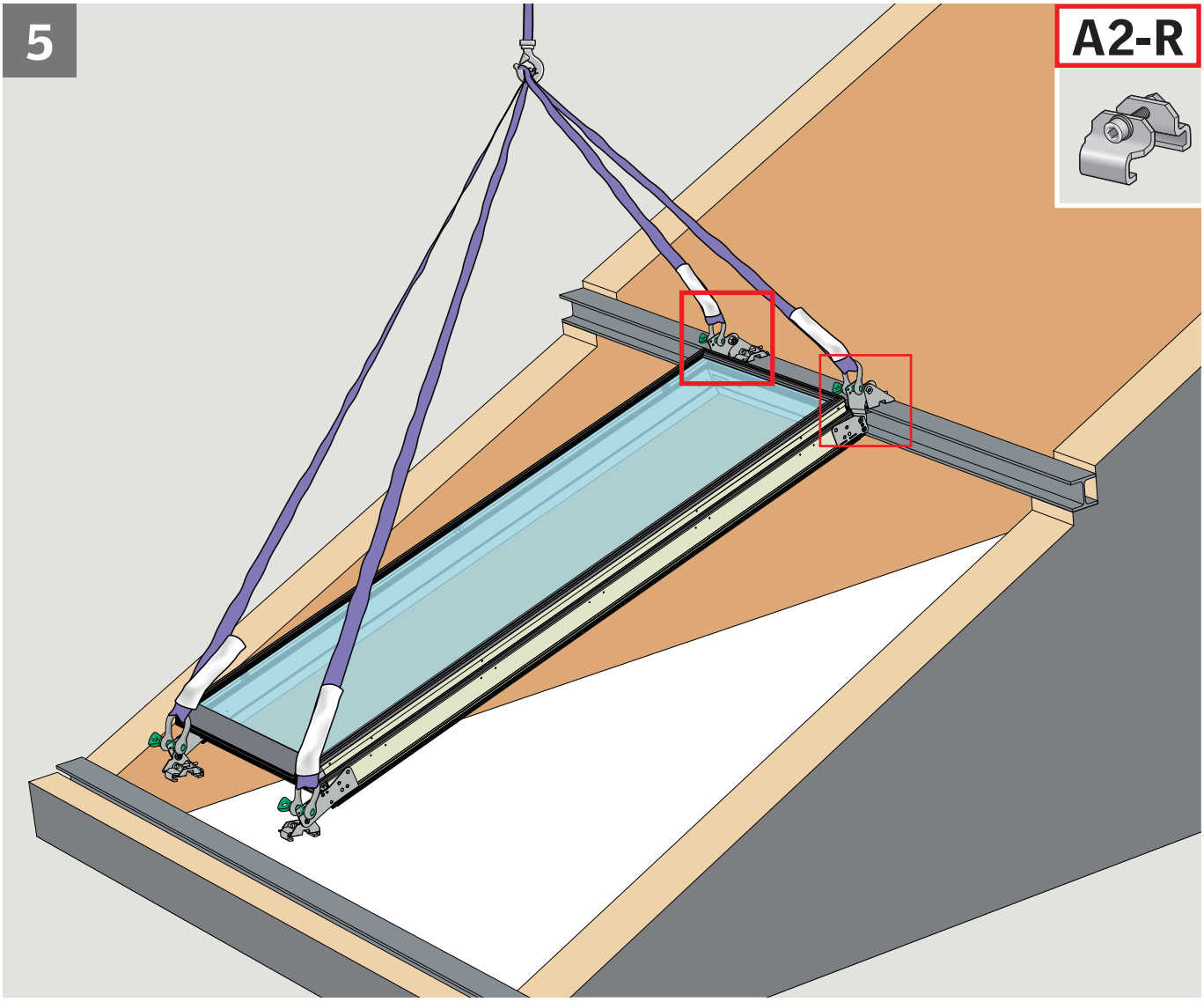
5
A2-R

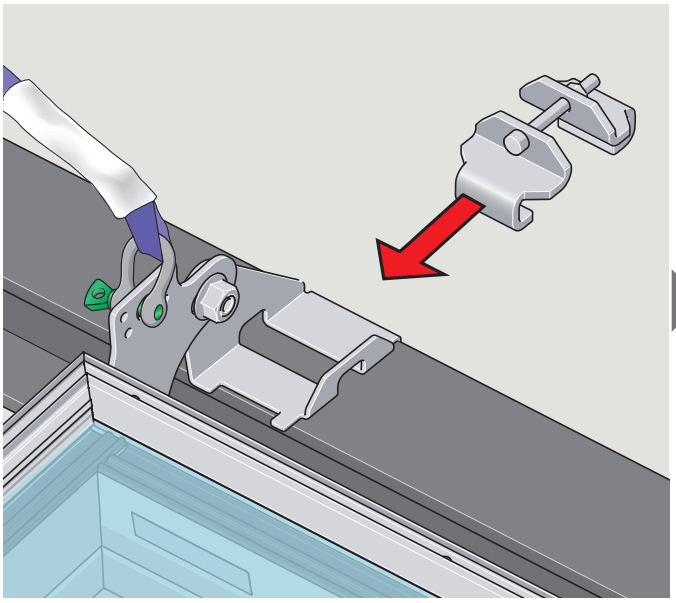

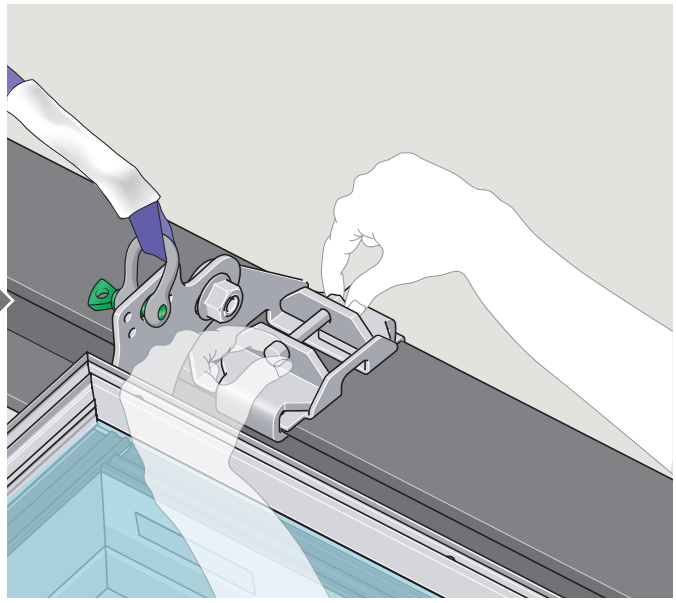

6

A2-R

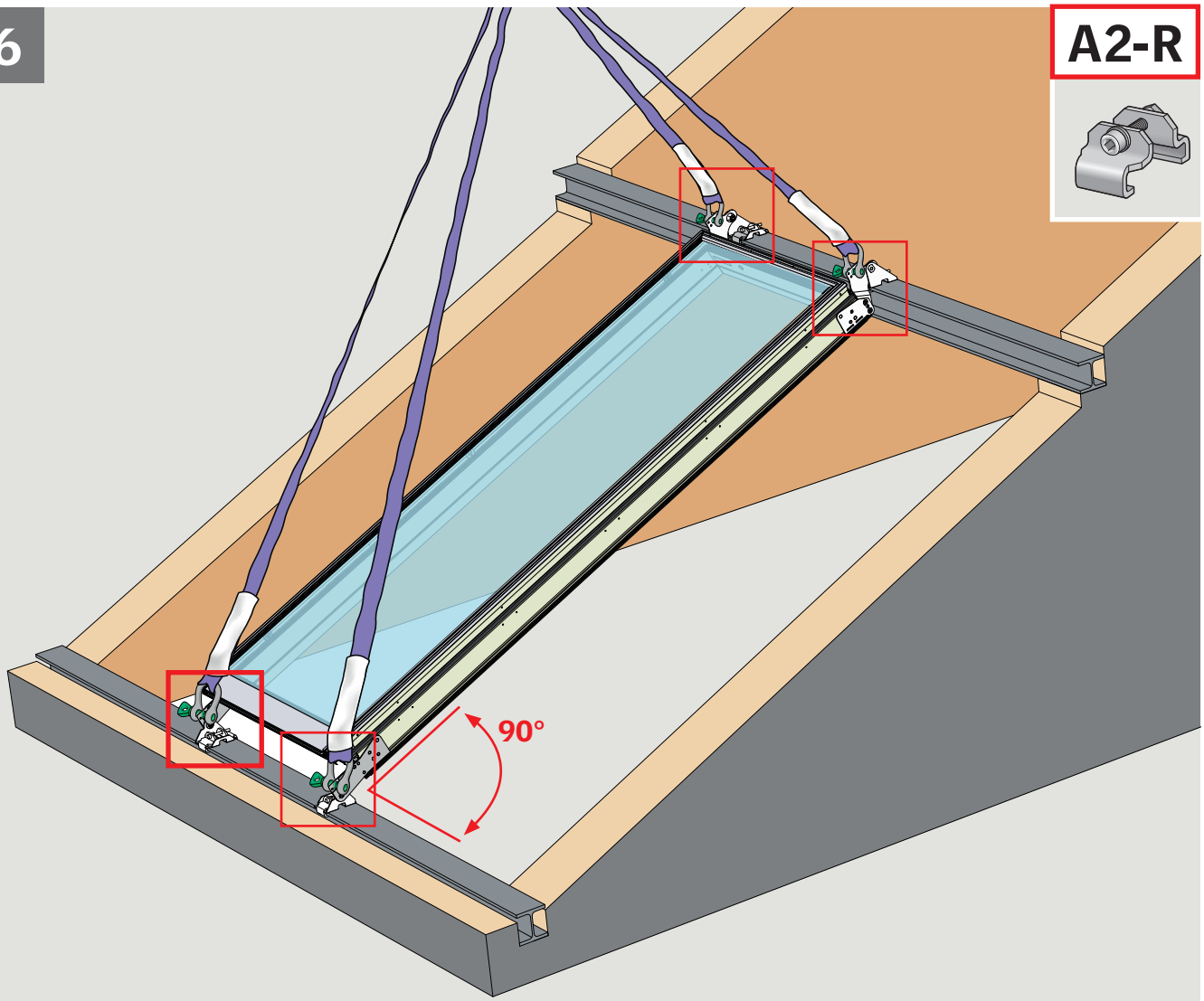

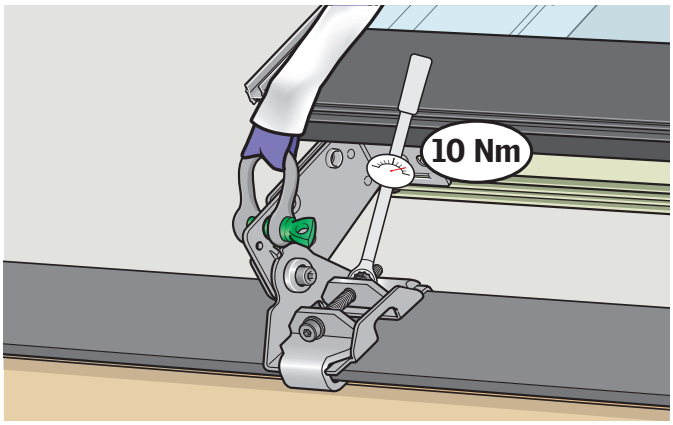

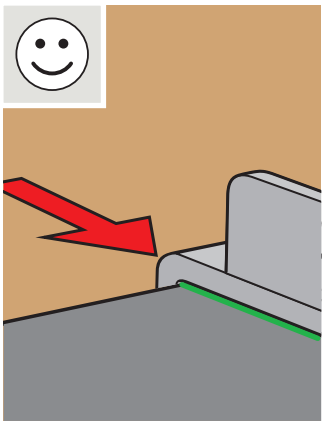

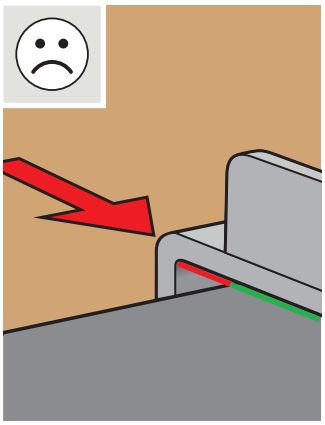

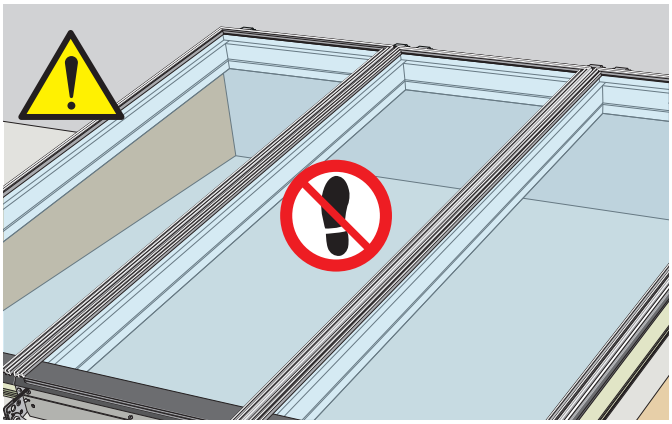

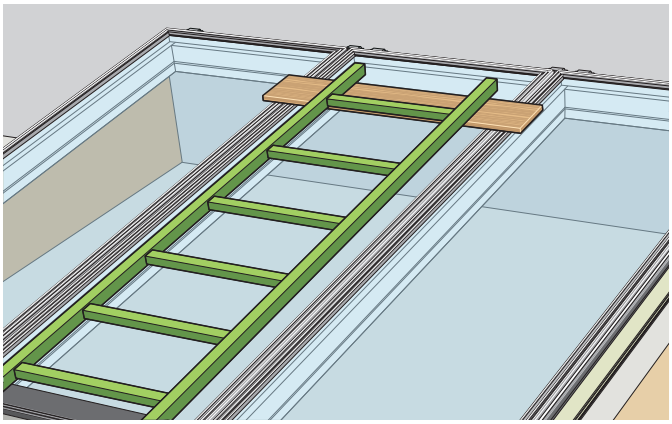

7

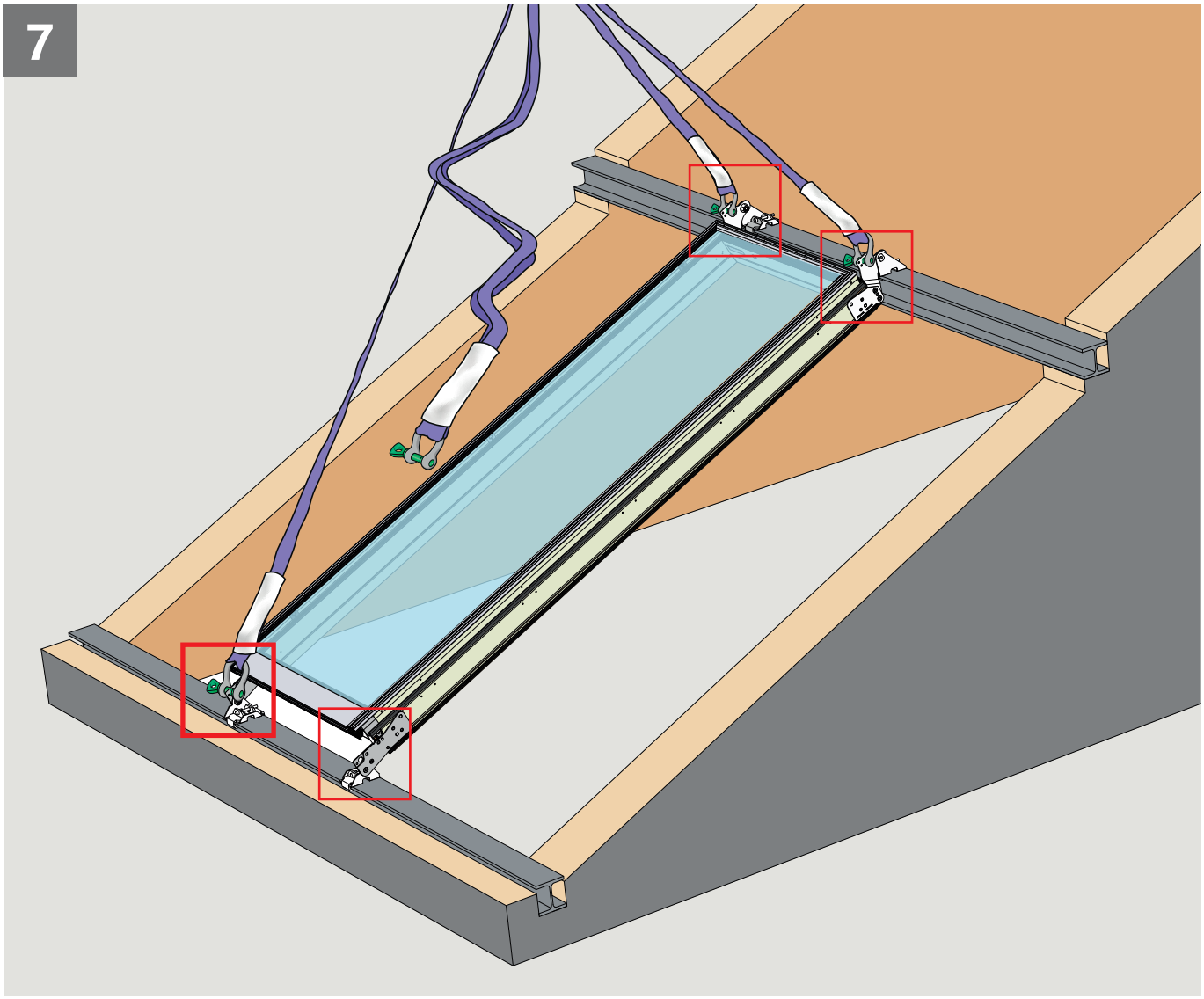

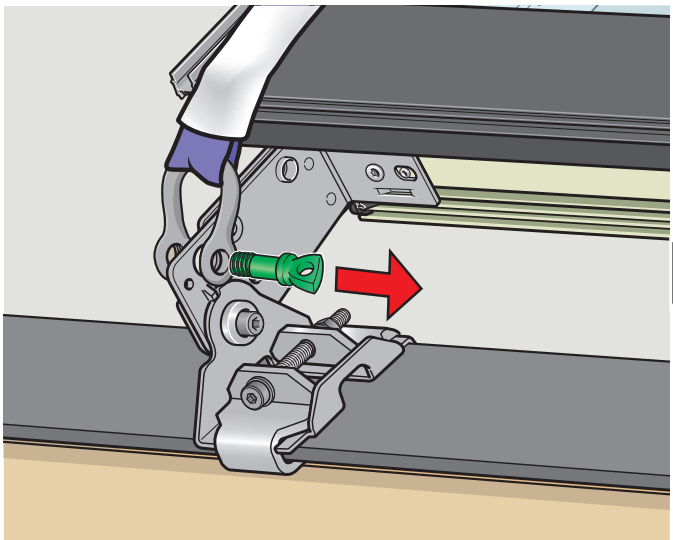

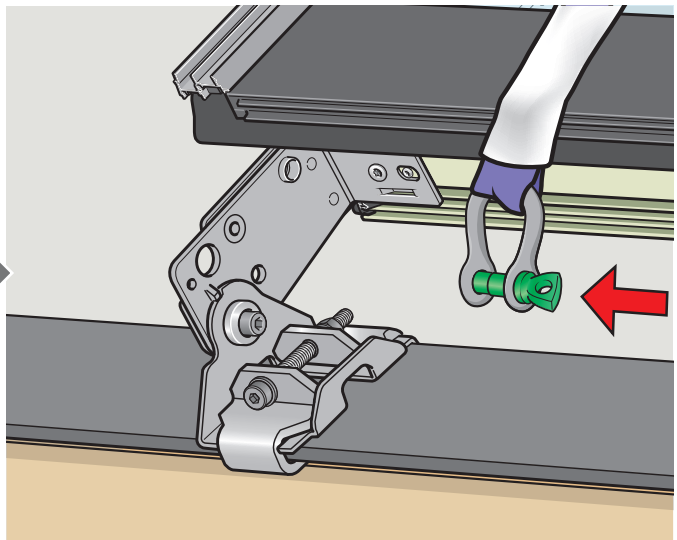

8

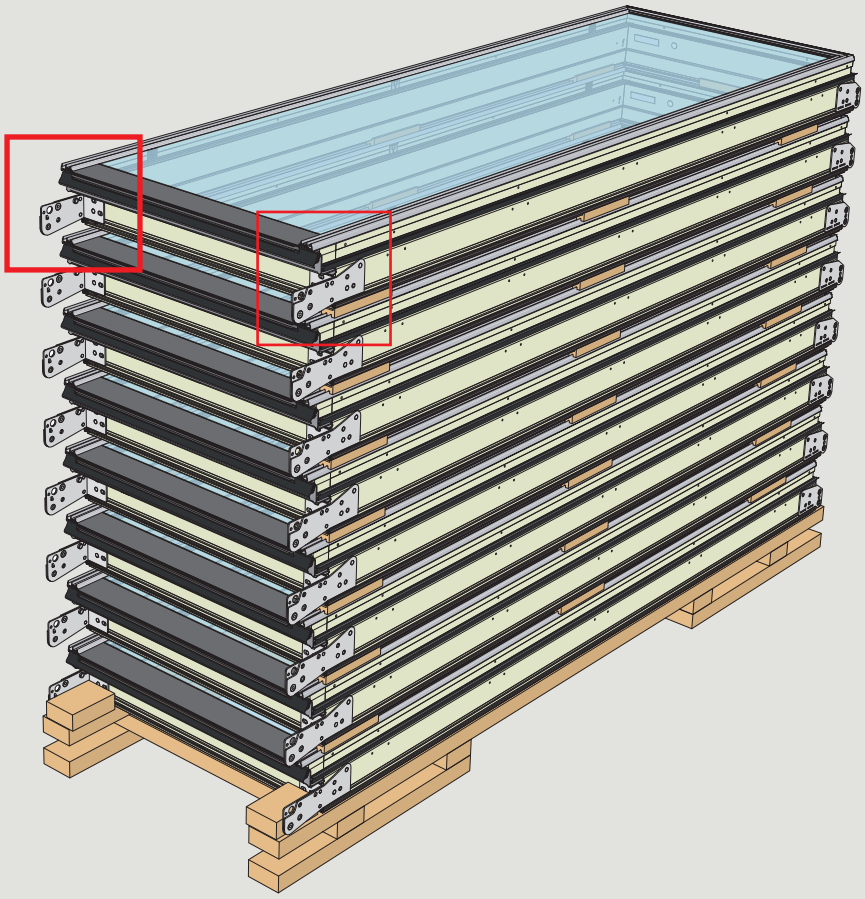

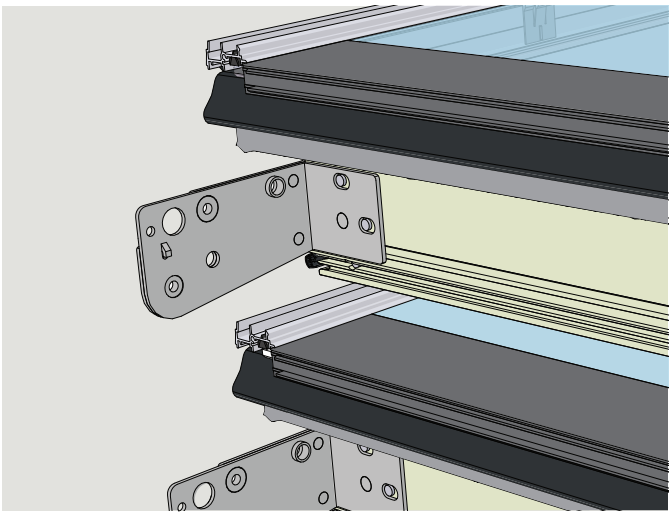

9

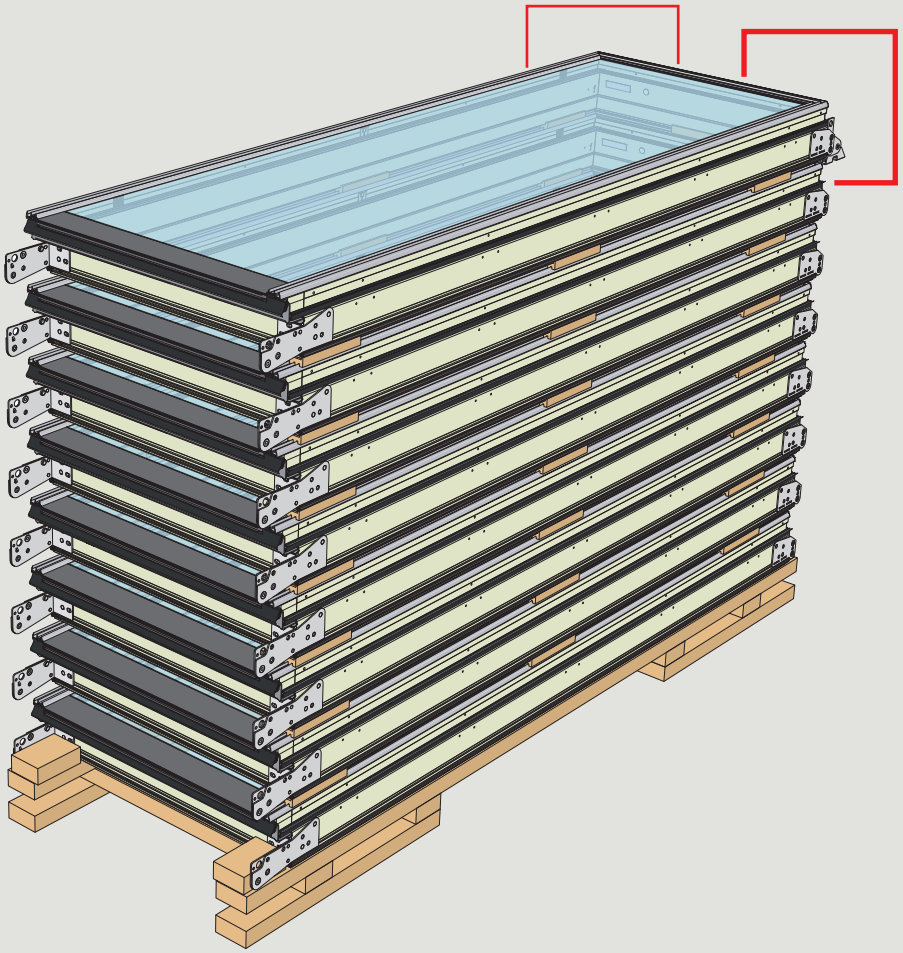

A2-S



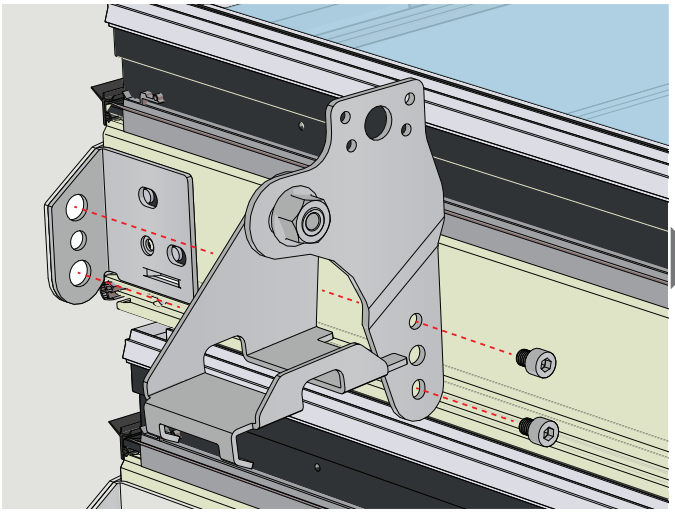

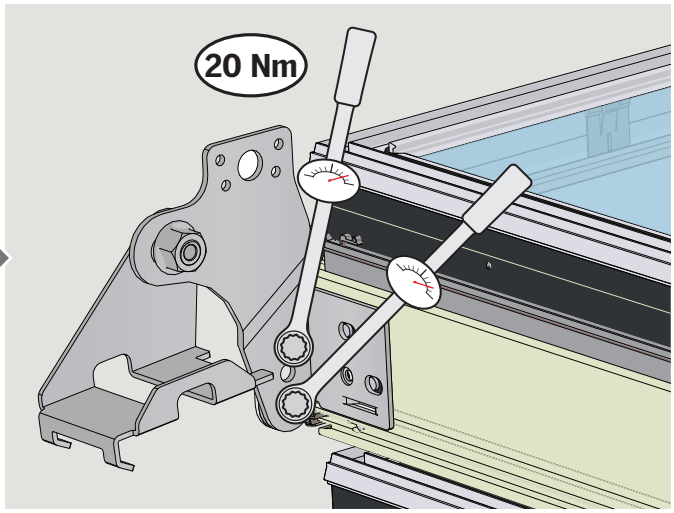

10

A3-R

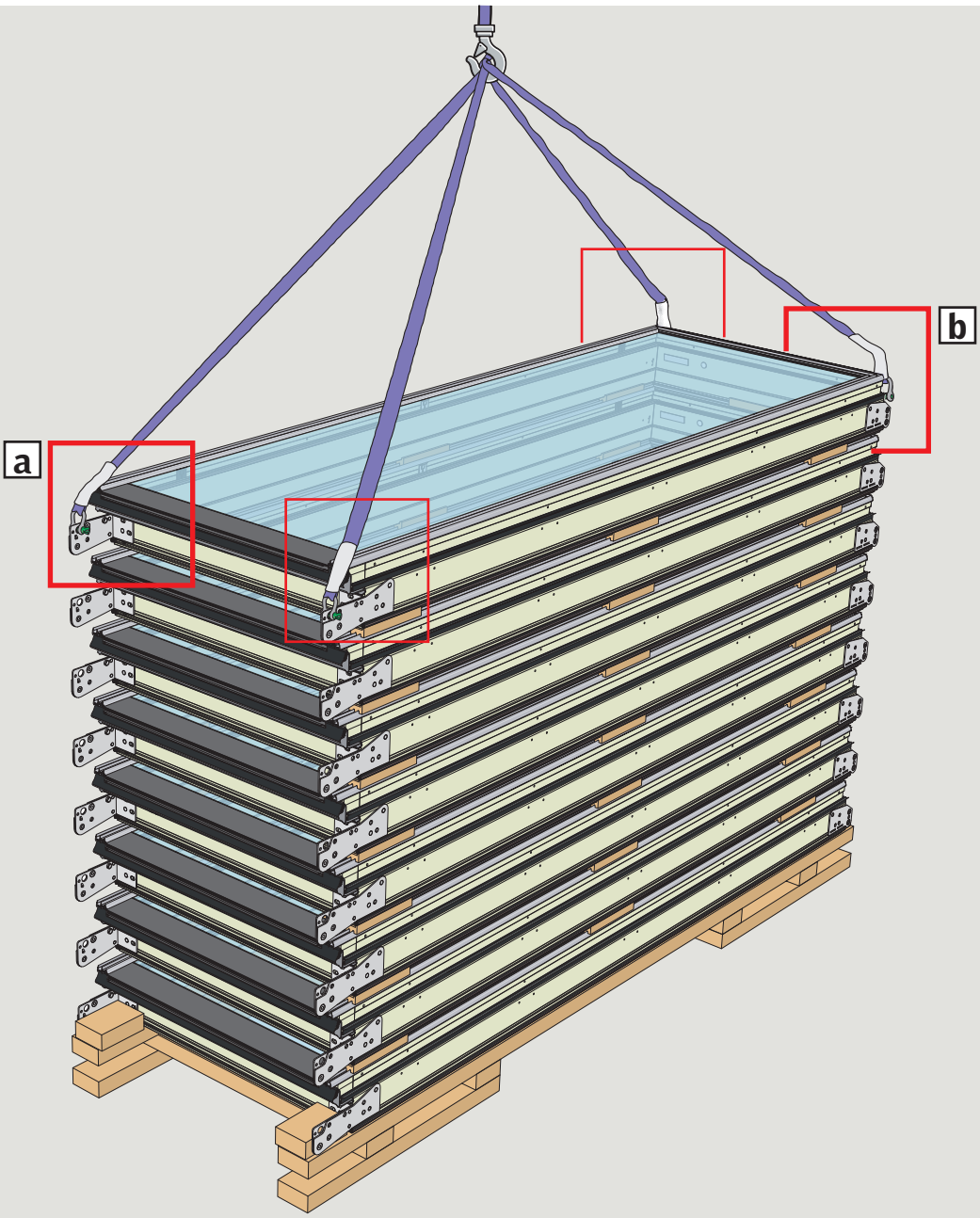

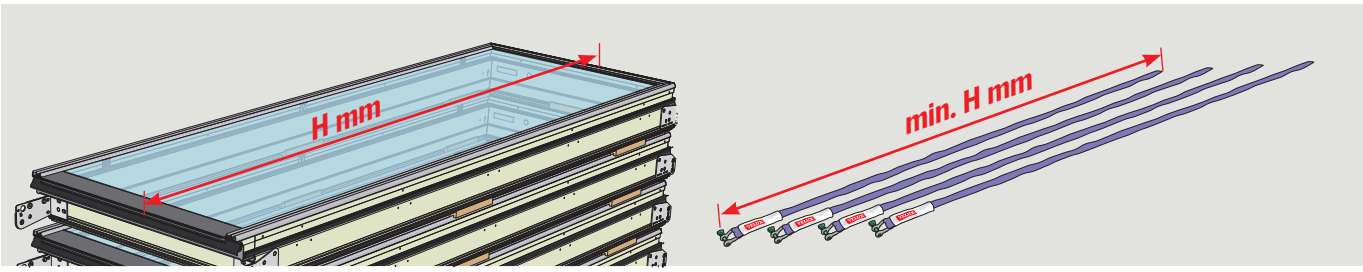

a

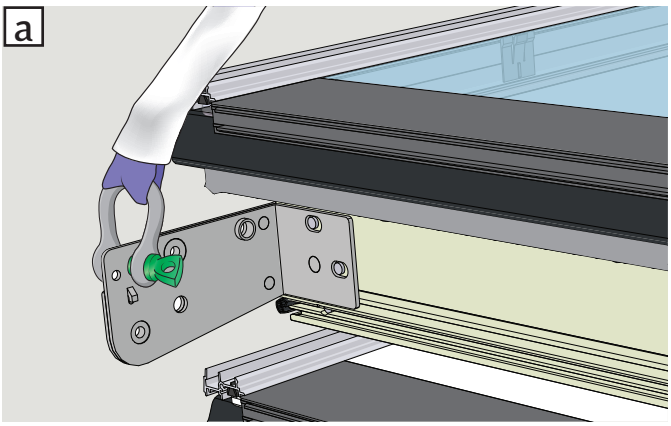

b

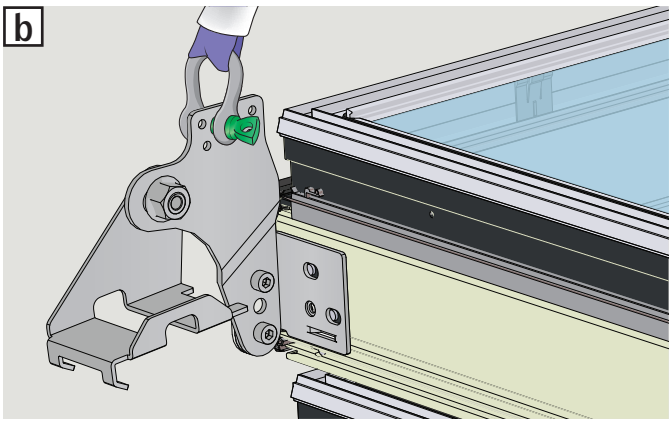

11

A2-S

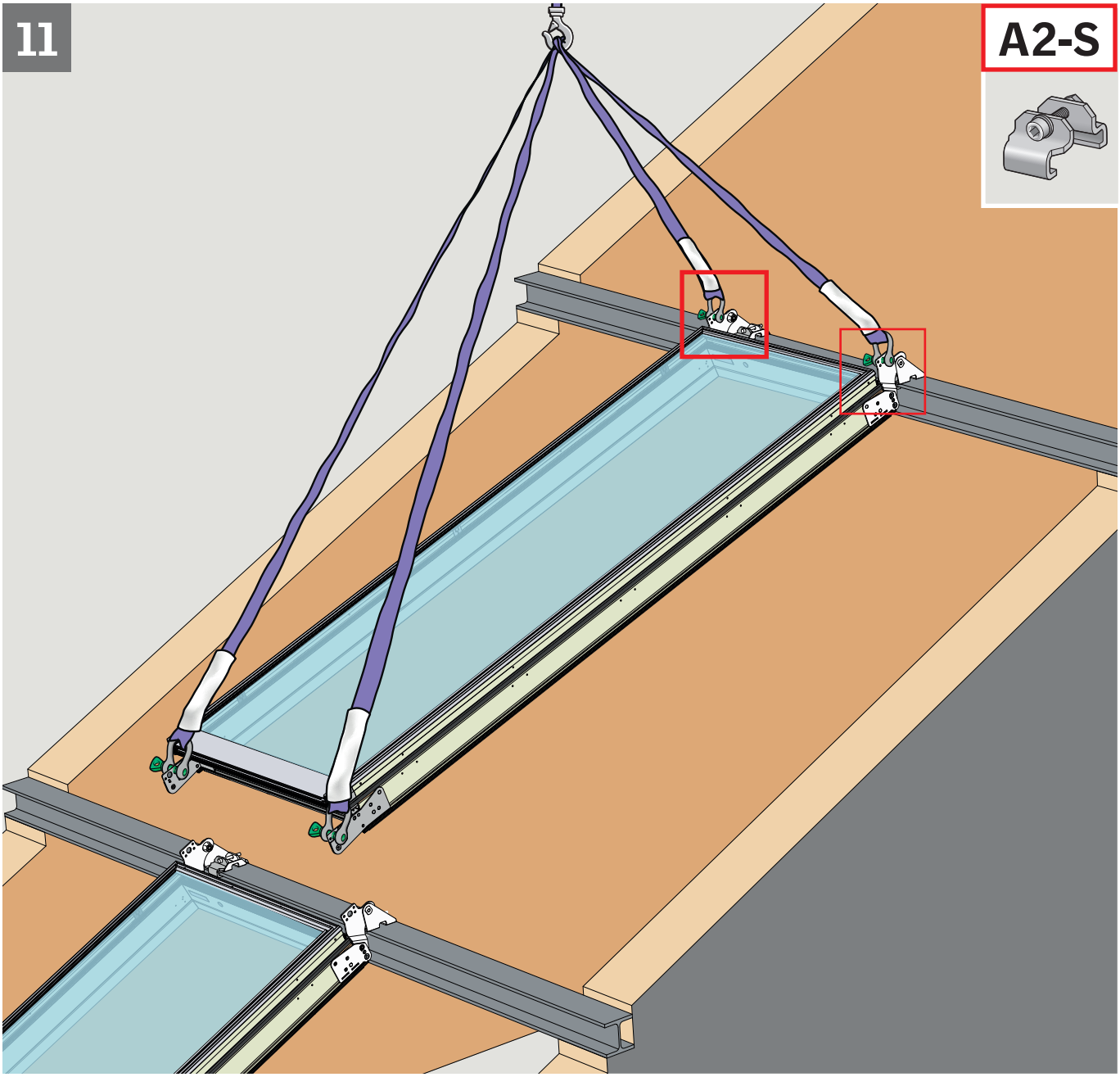

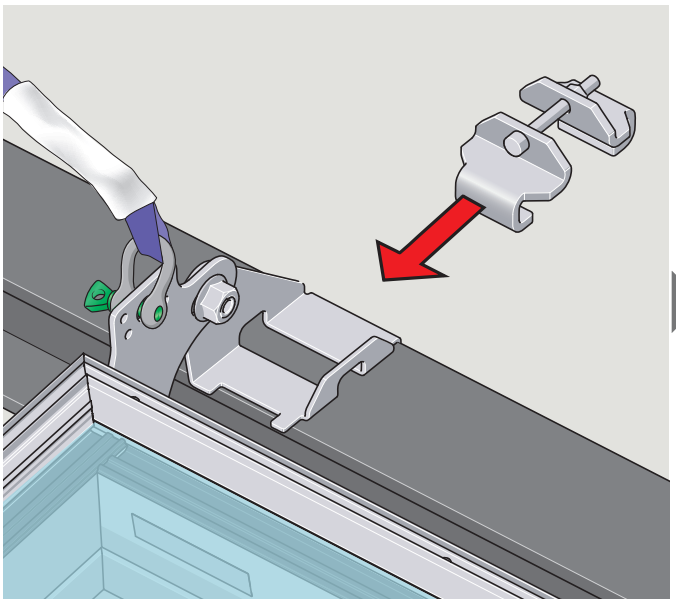

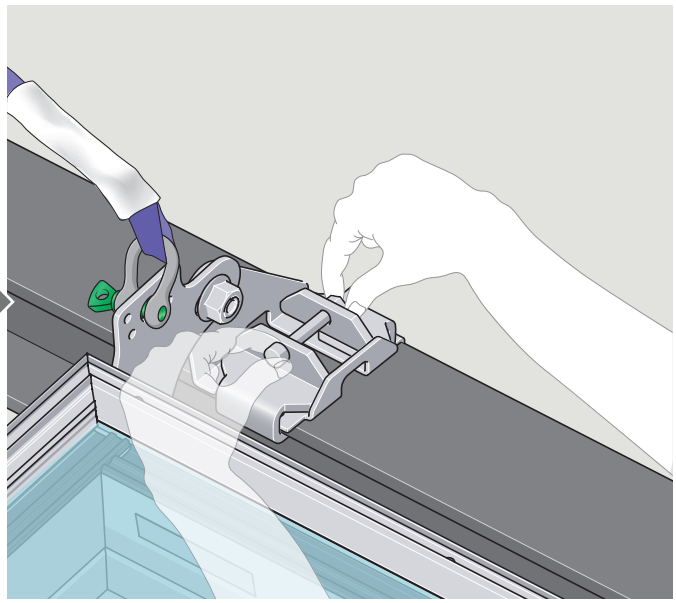

12

A2-S

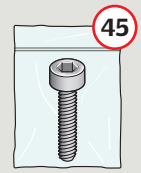

M8 x 30 mm

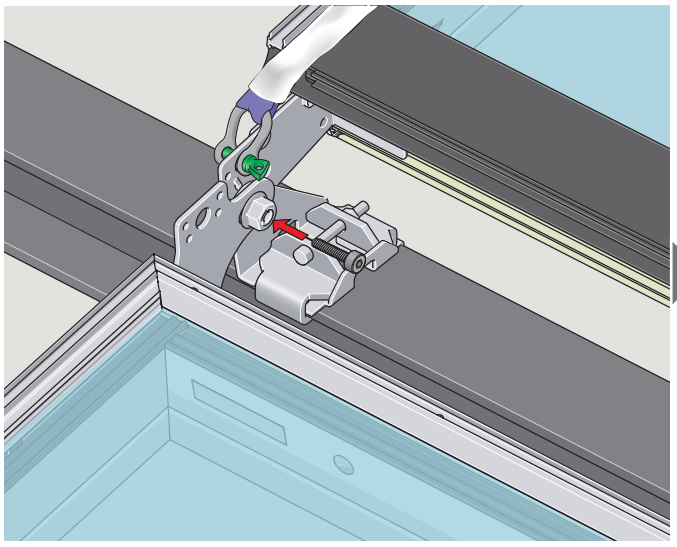

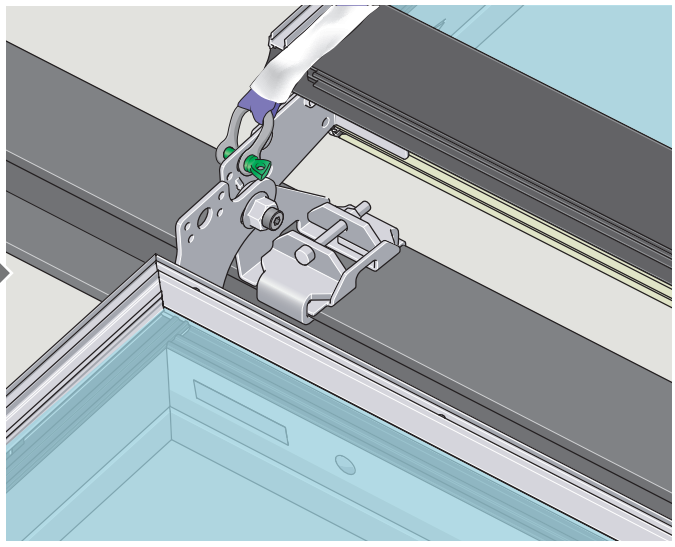

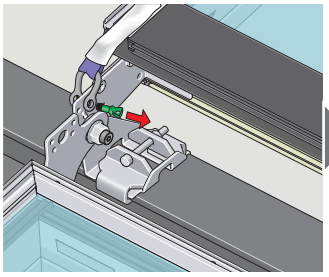

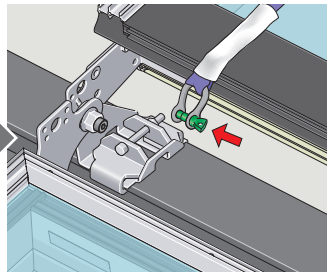

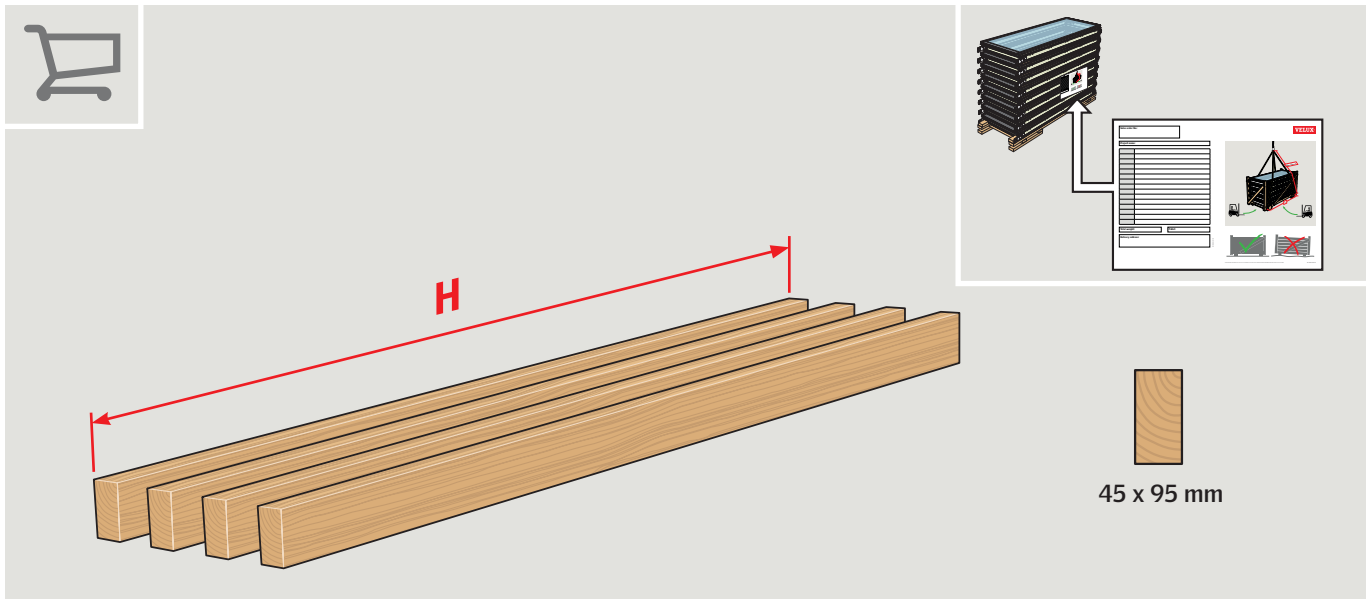

13

A3-R

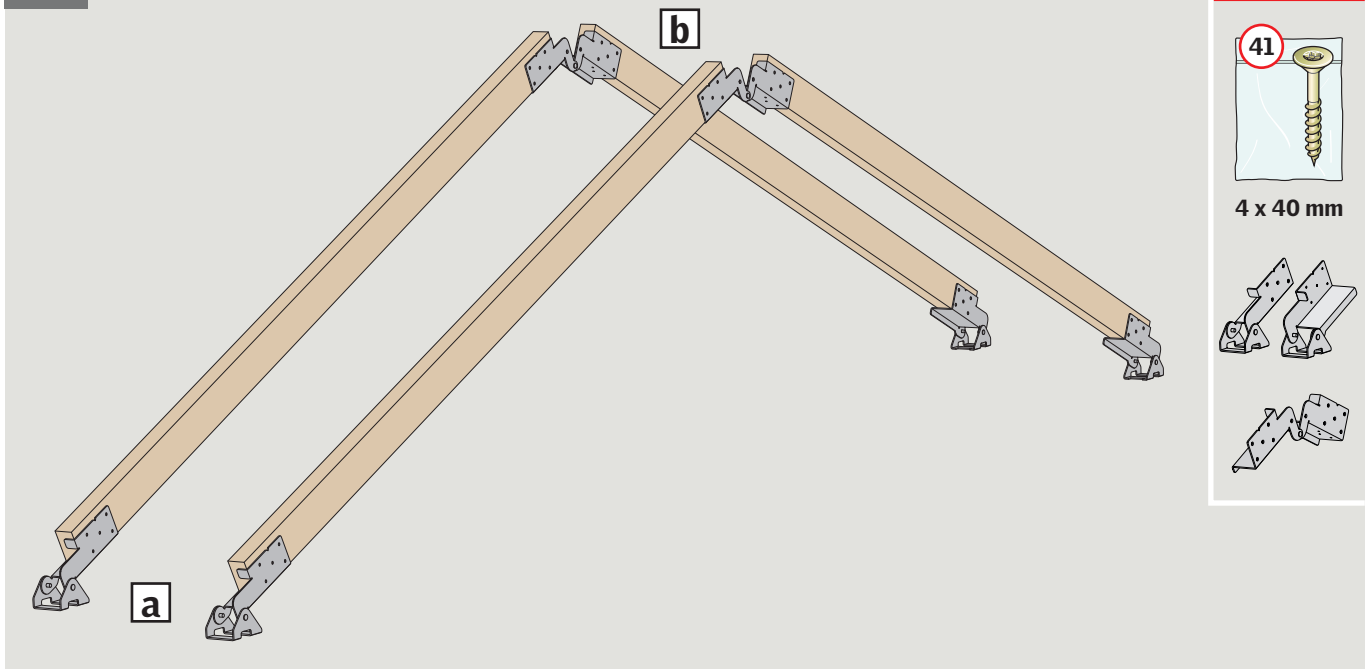

4 x 40 mm

a

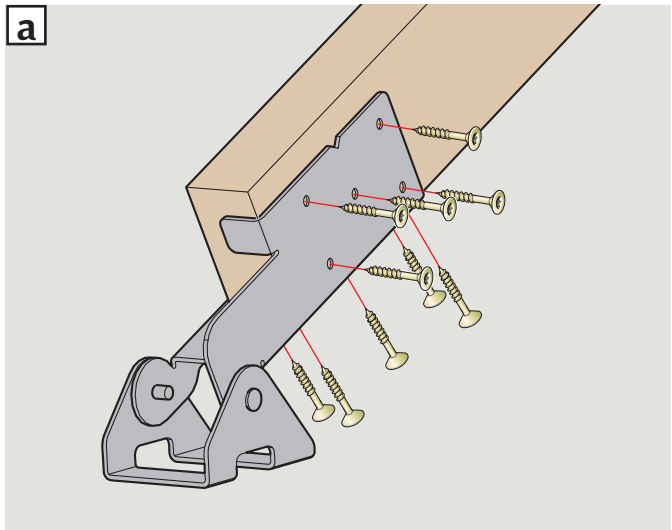

b

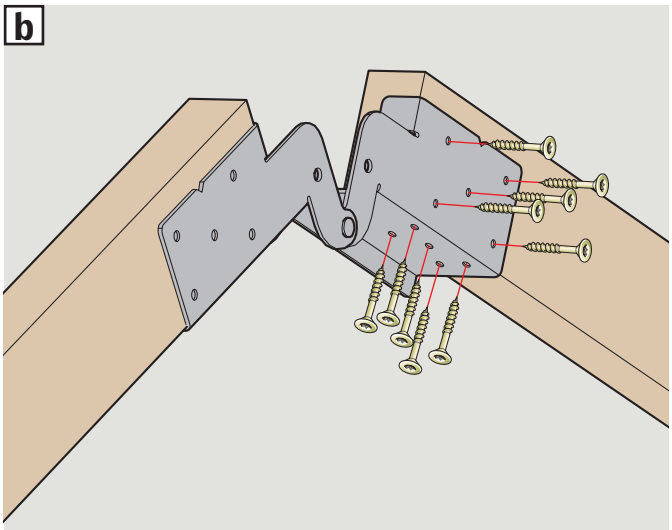

14

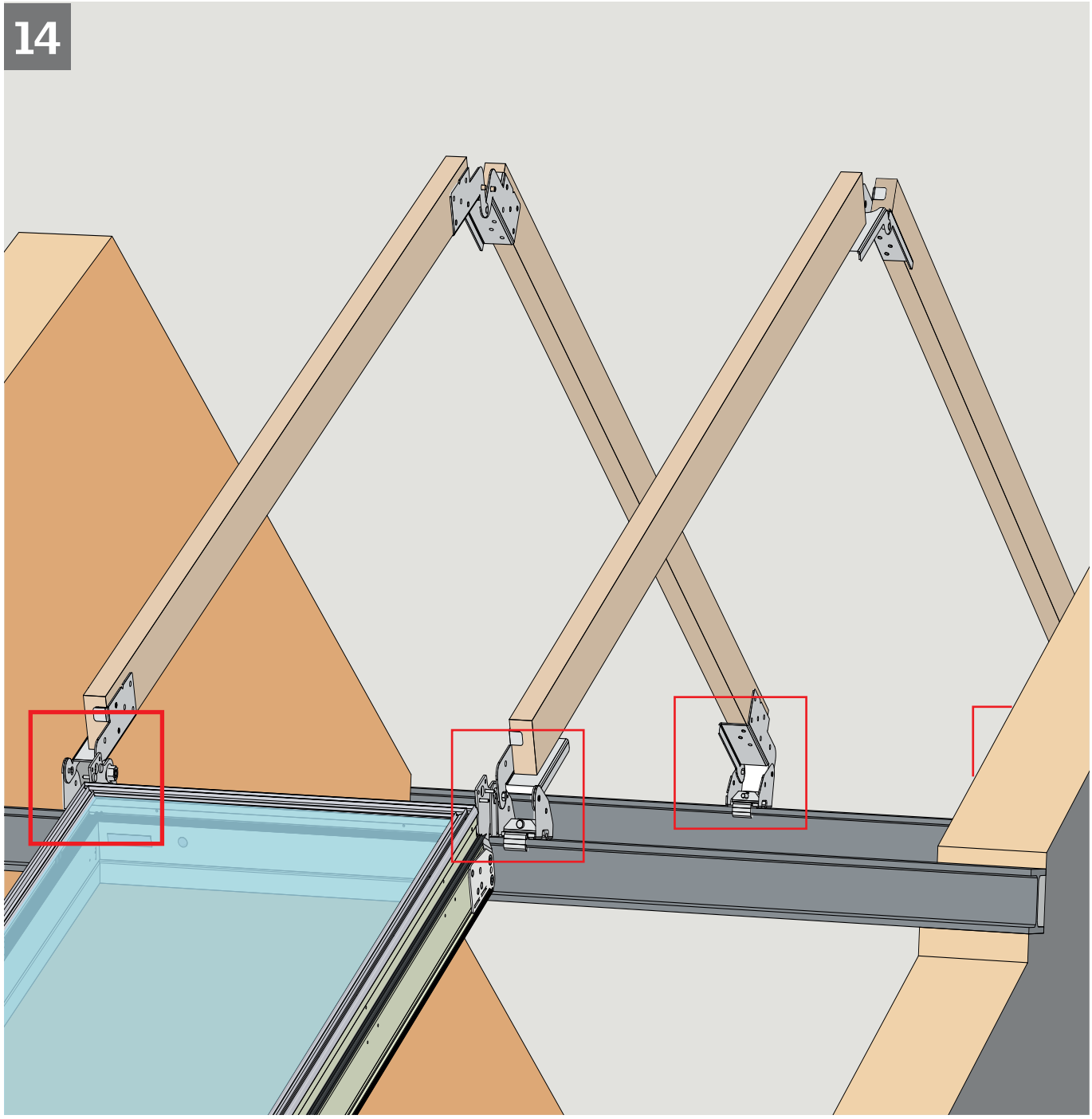

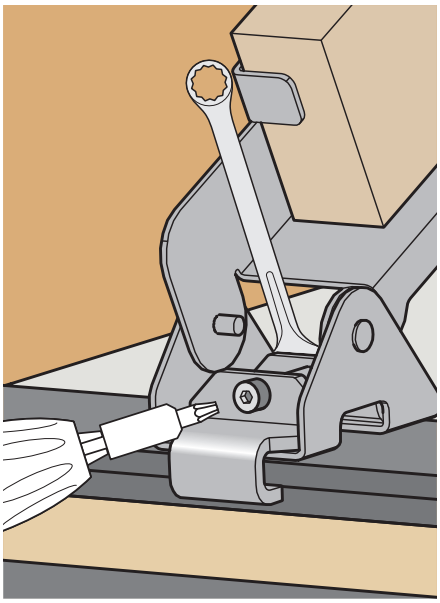

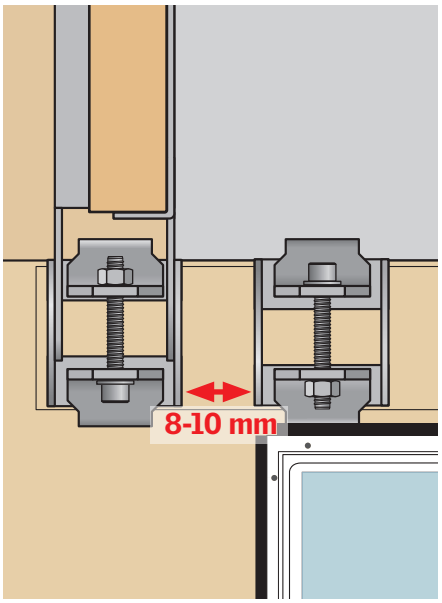

15

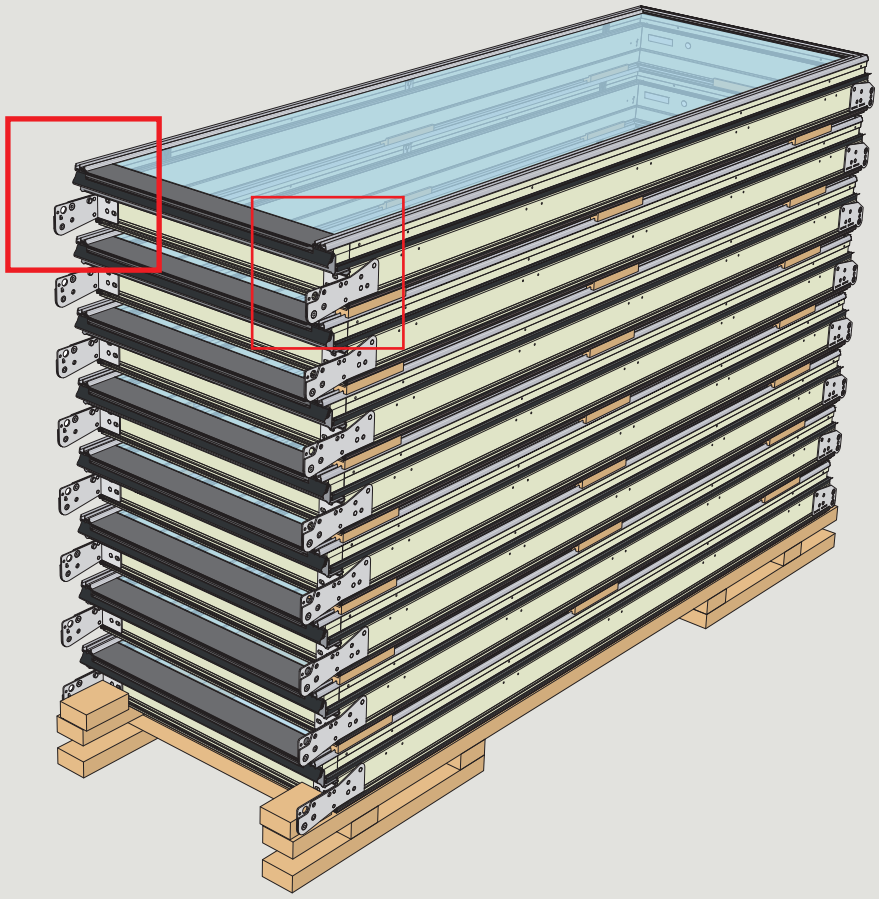

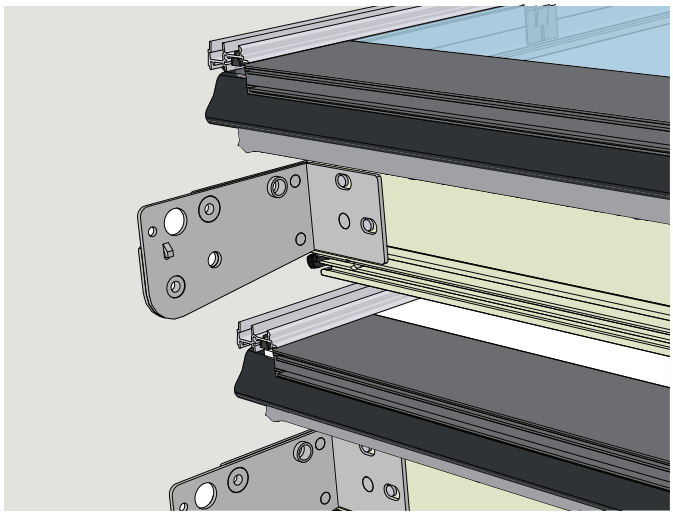

16

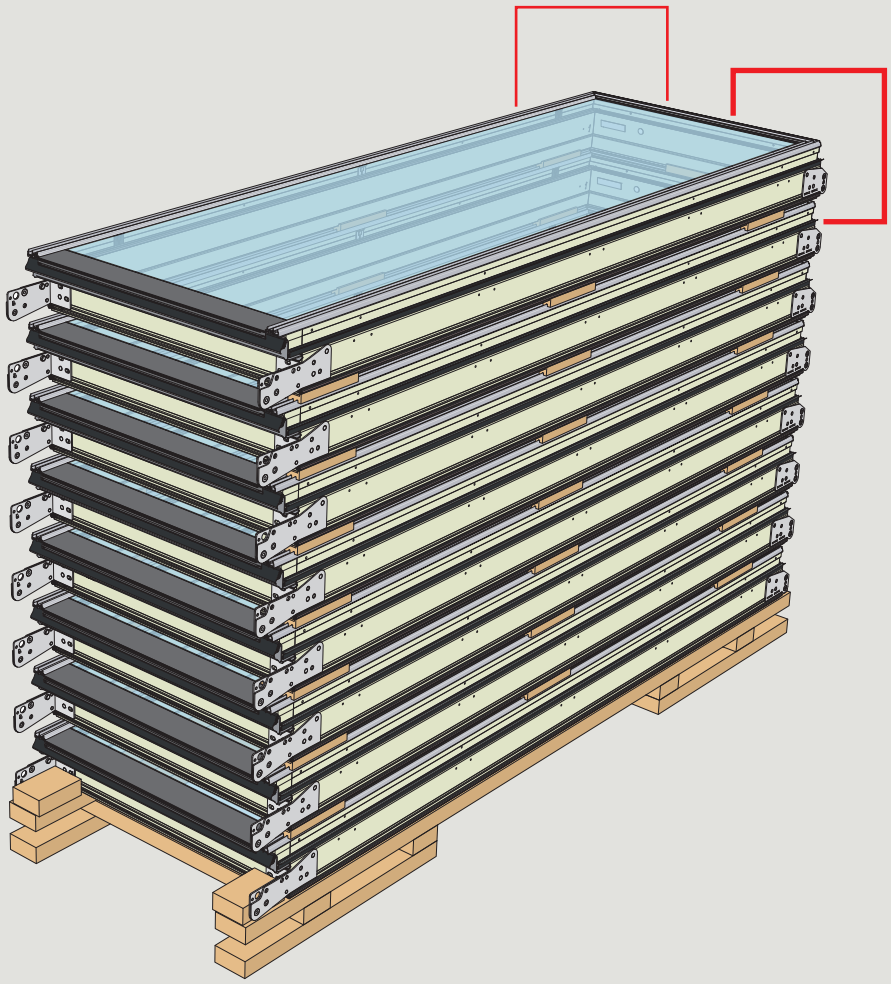

A2-R

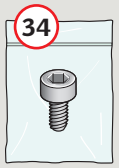

M8 x 10 mm

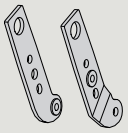

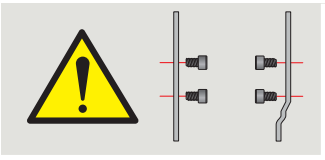

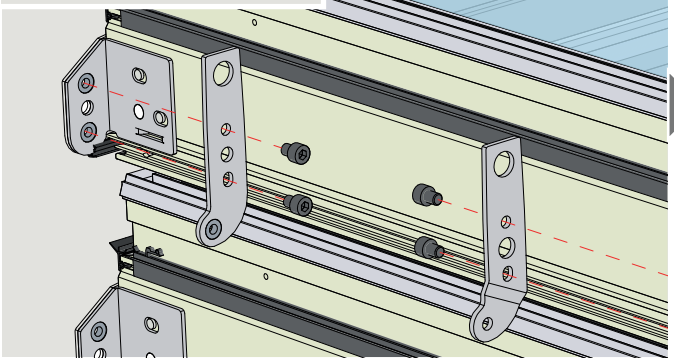

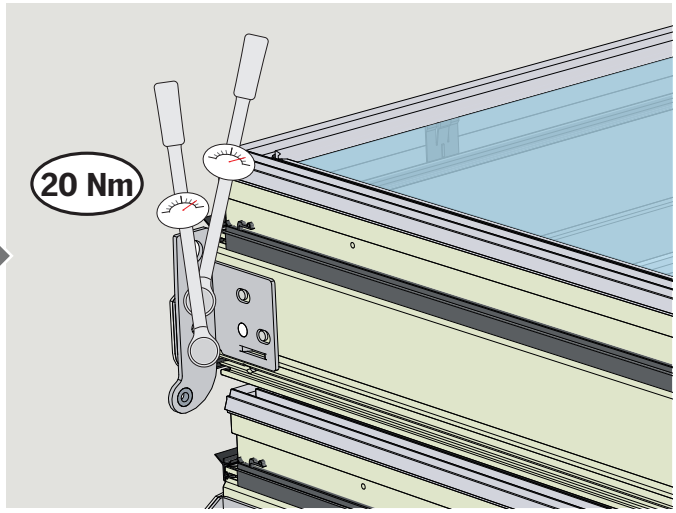

17

A3-R

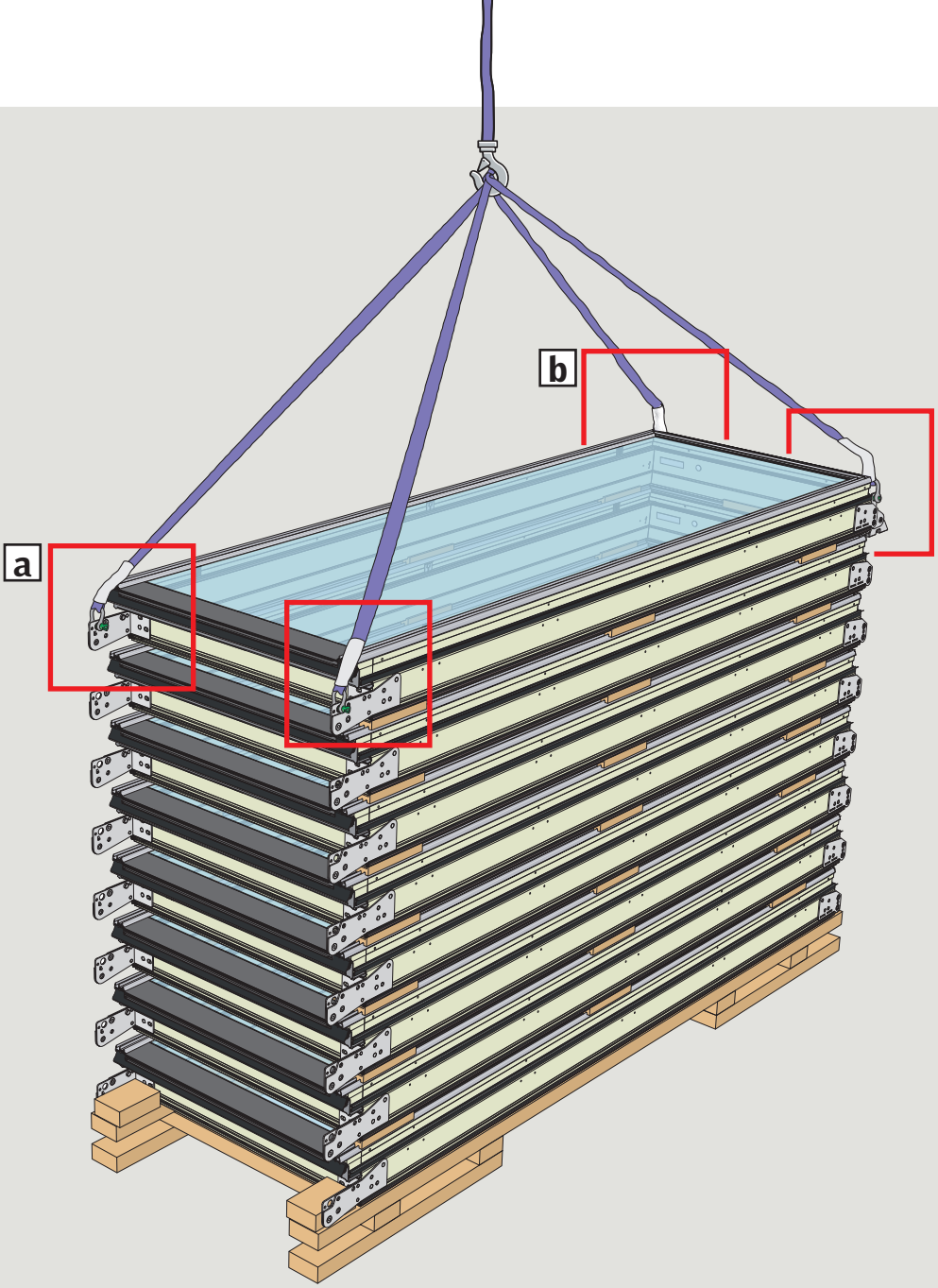

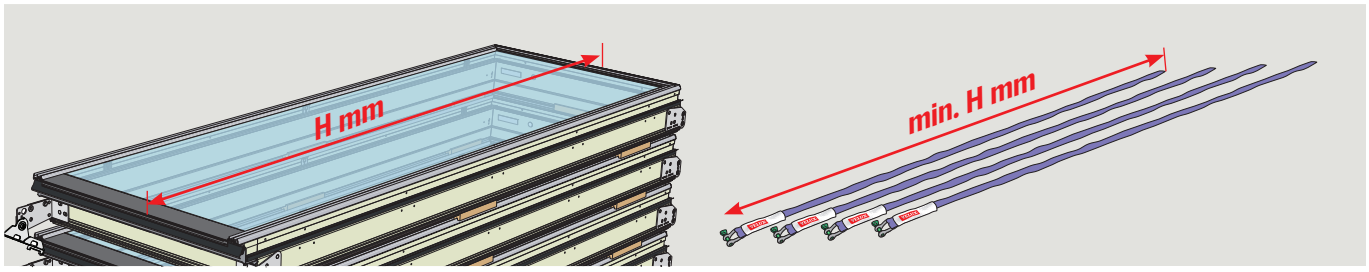

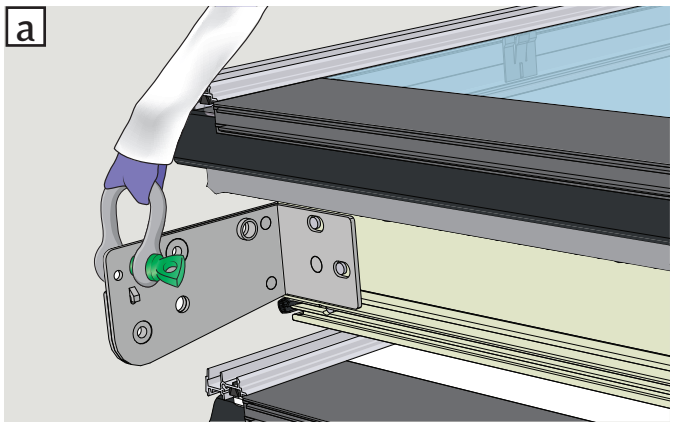

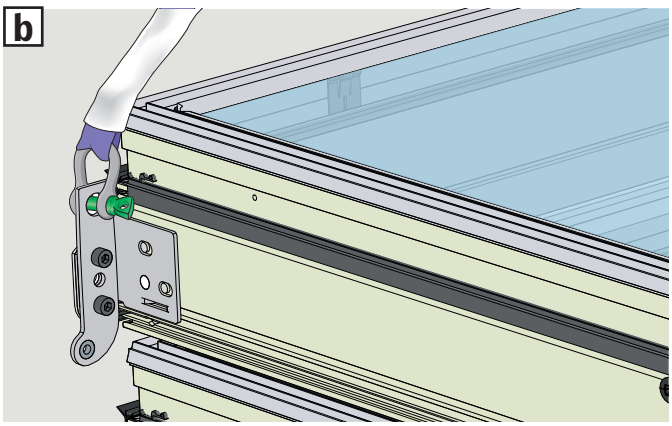

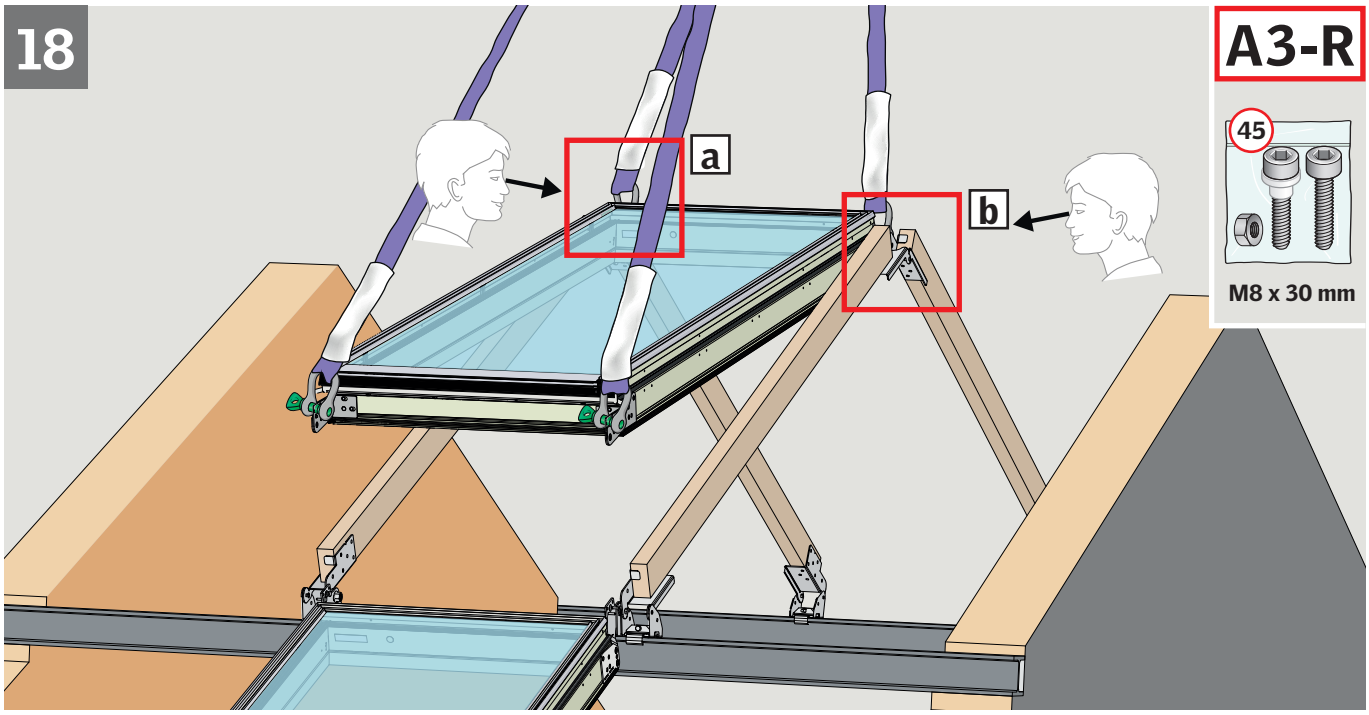
18
A3-R
45
M8 x 30 mm
a
b

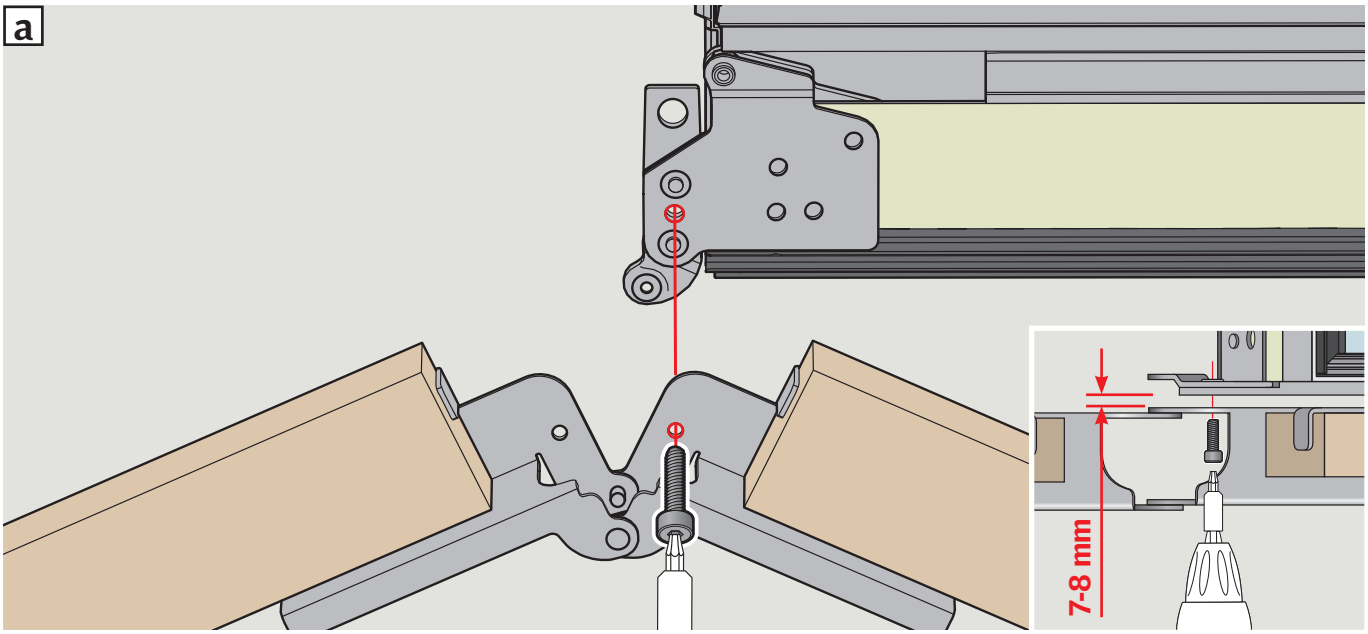
a
7-8 mm

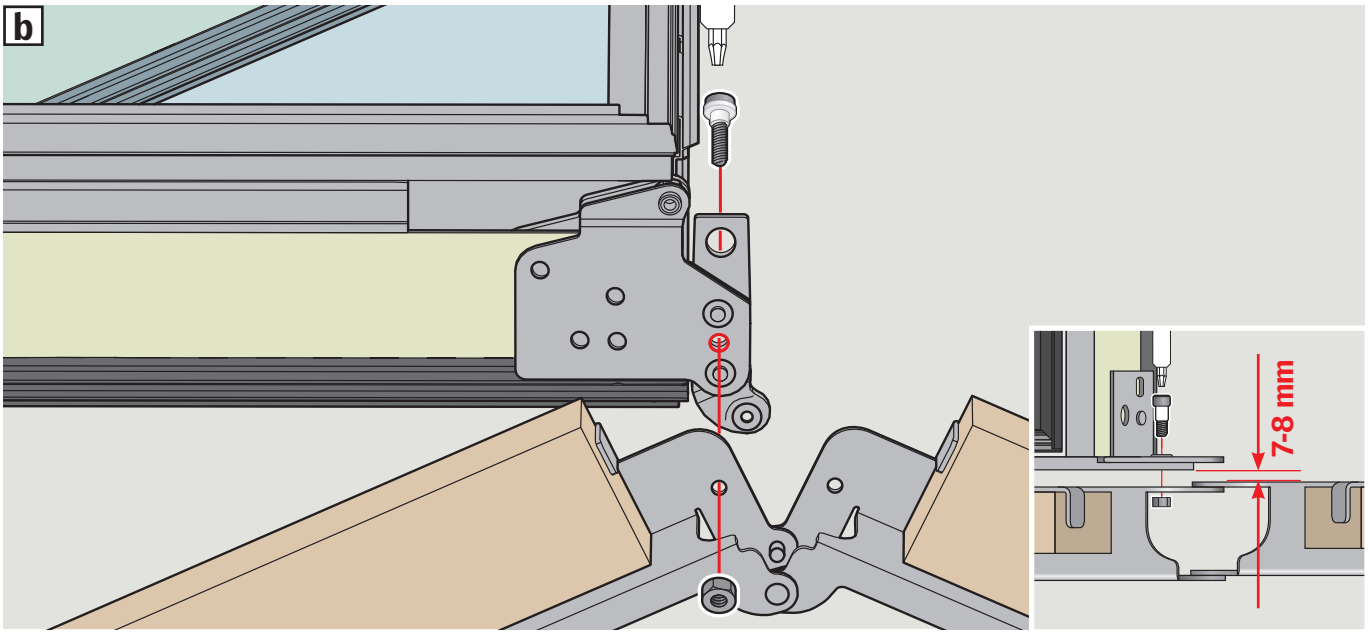
b
7-8 mm

19

A2-S

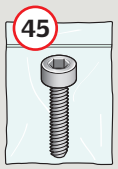

M8 x 30 mm

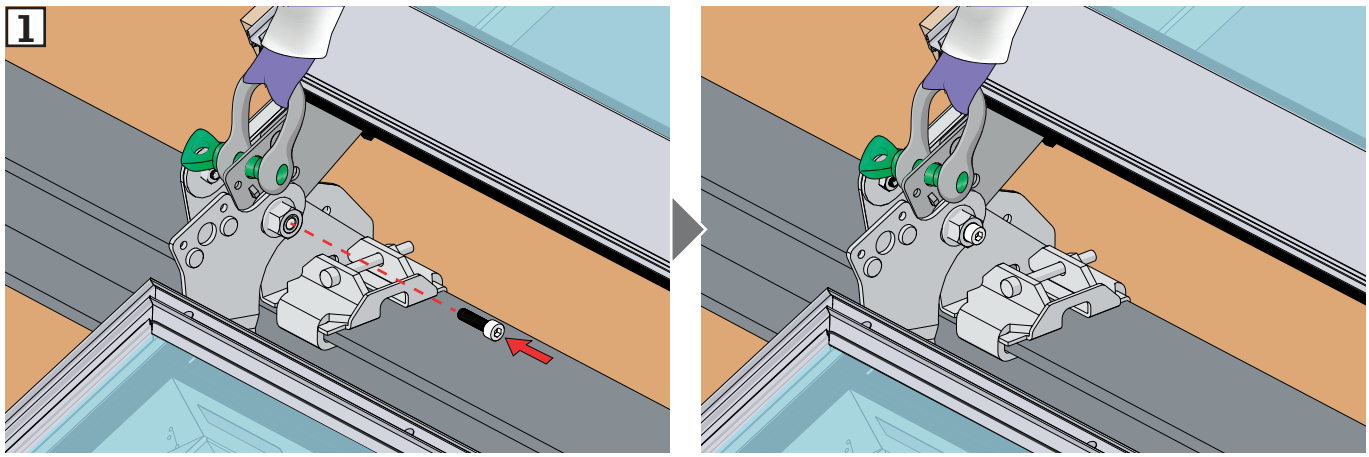

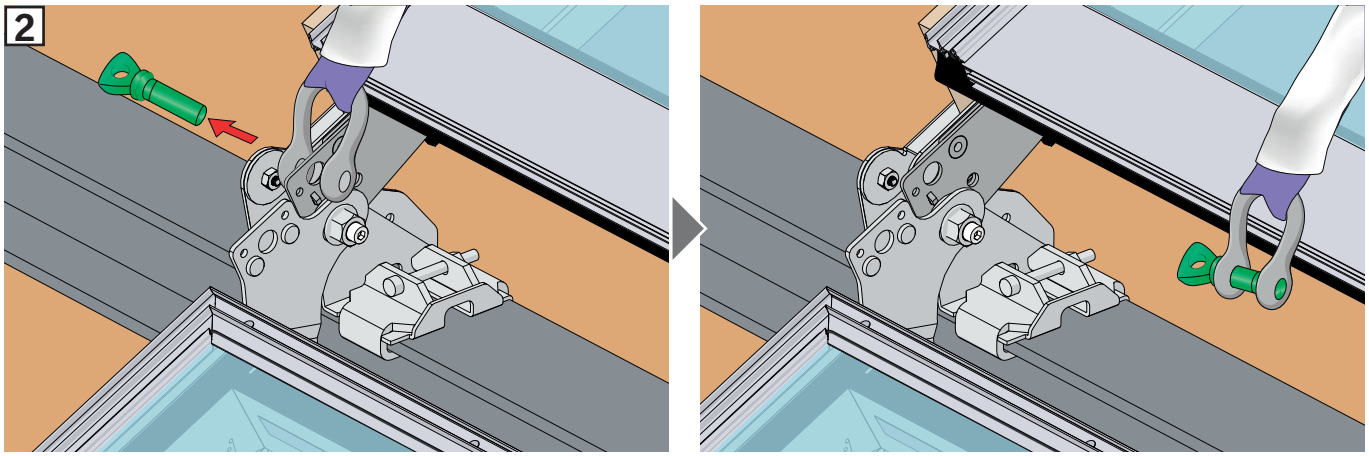

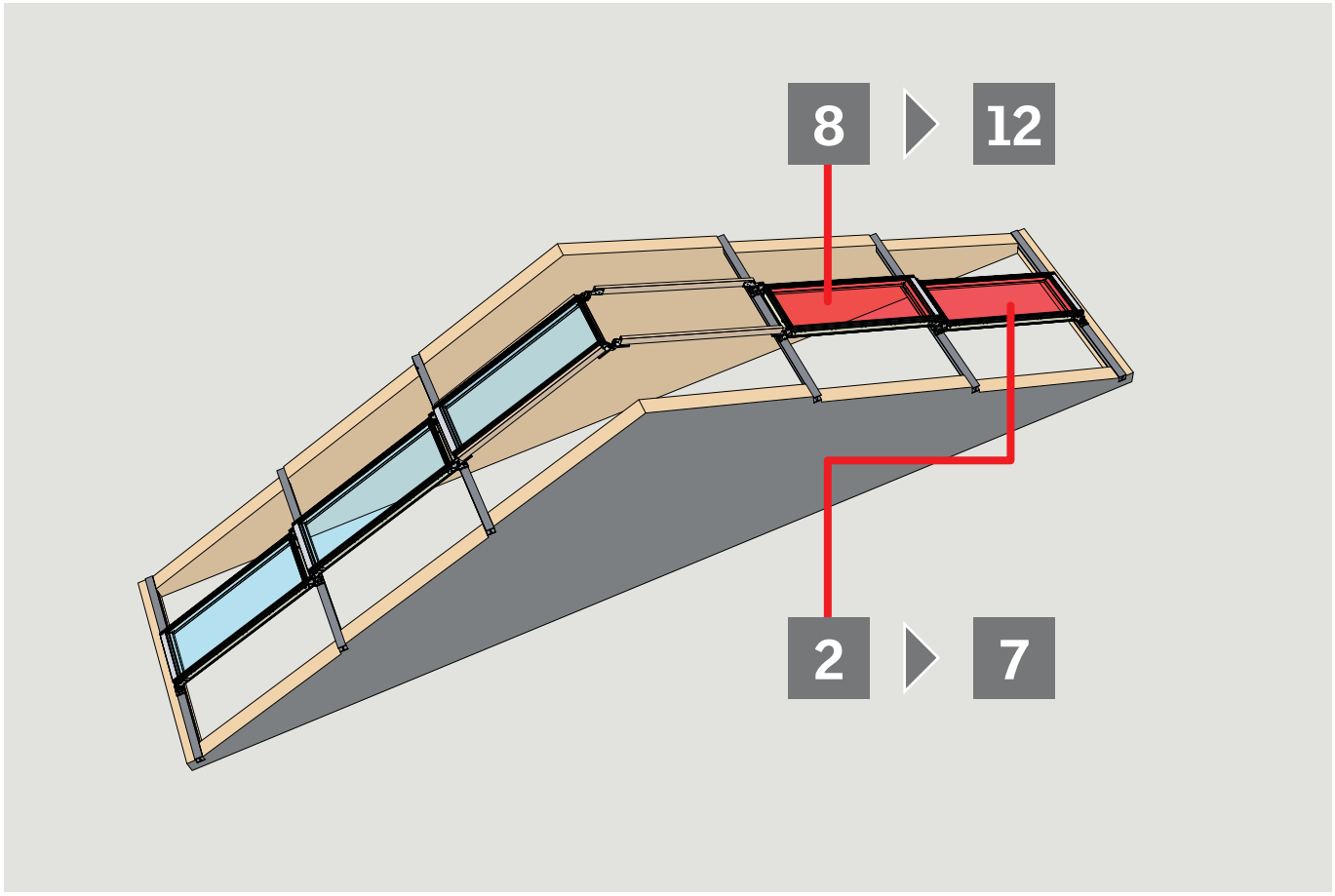
8
12
2
7

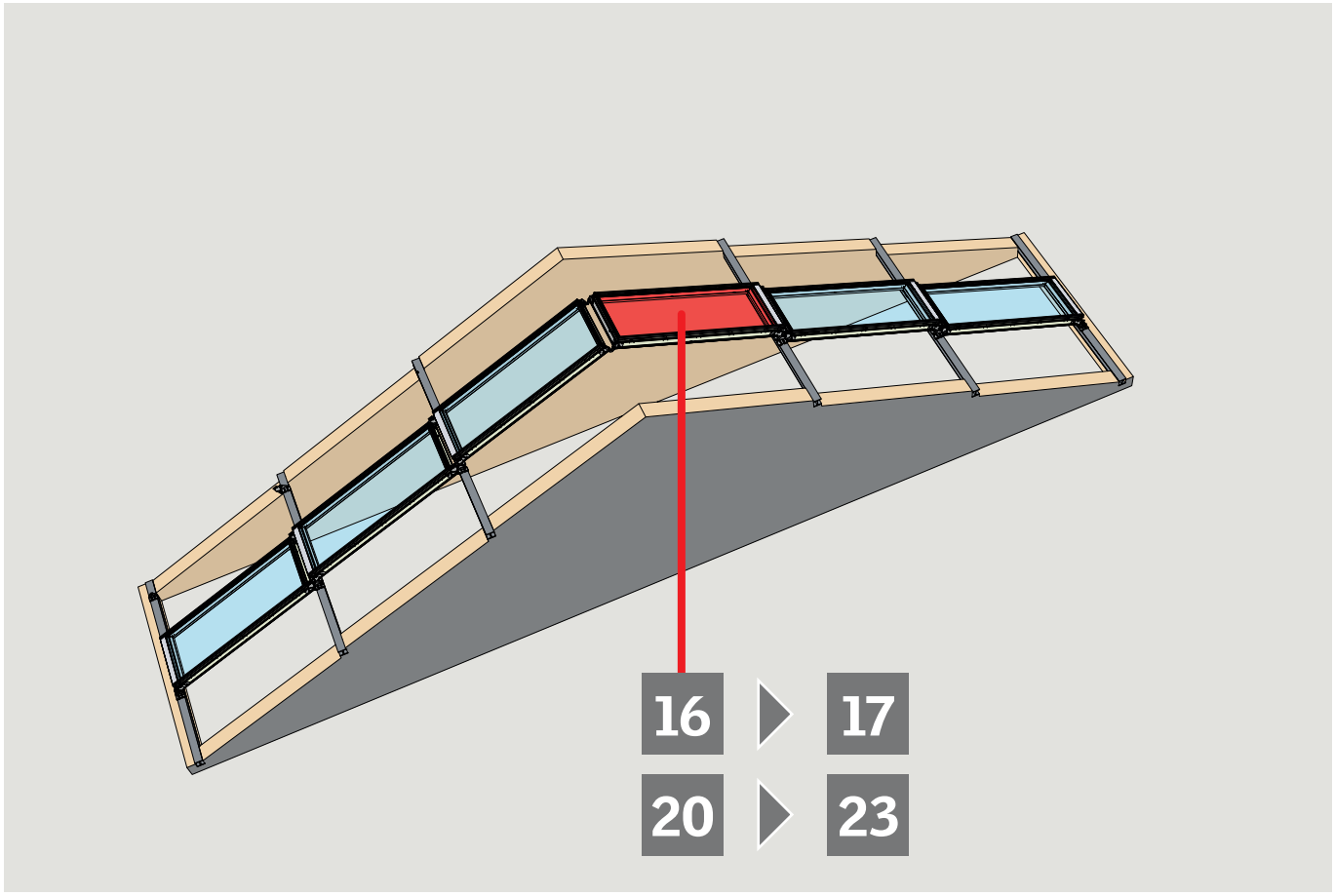
16
17
20
23

16 ▶ 17

20

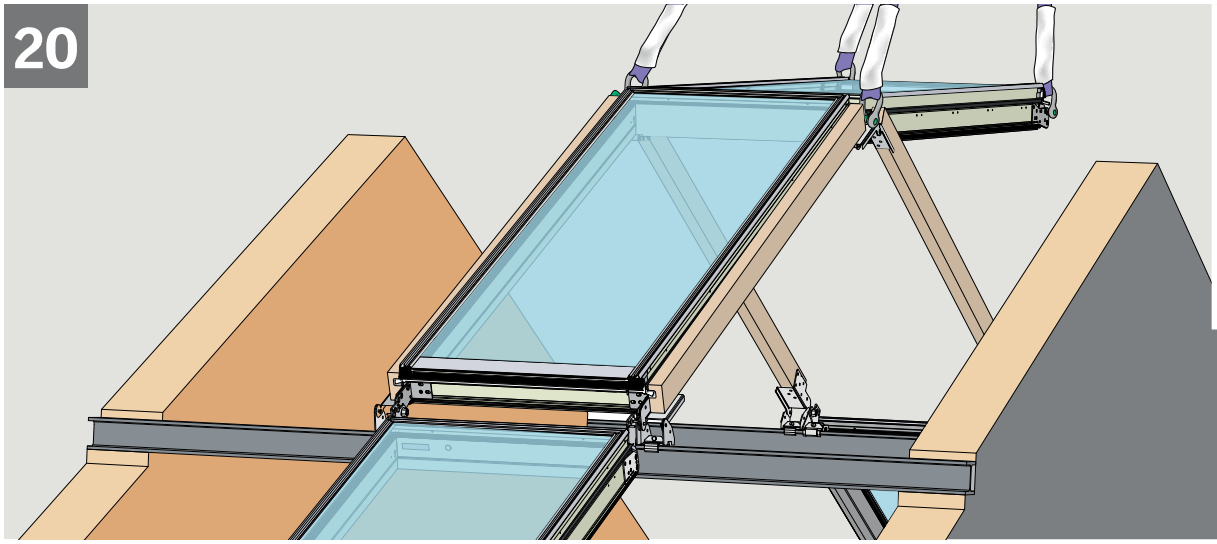

A2-R

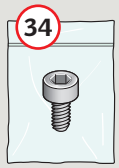

M8 x 10 mm

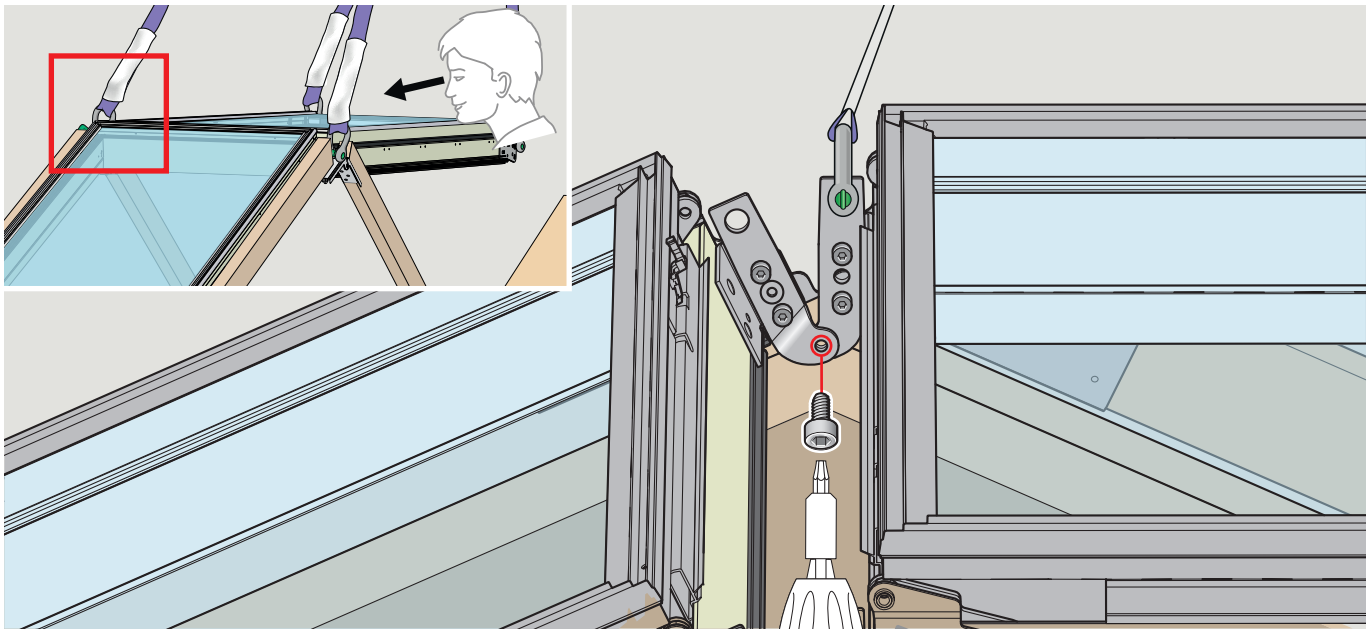

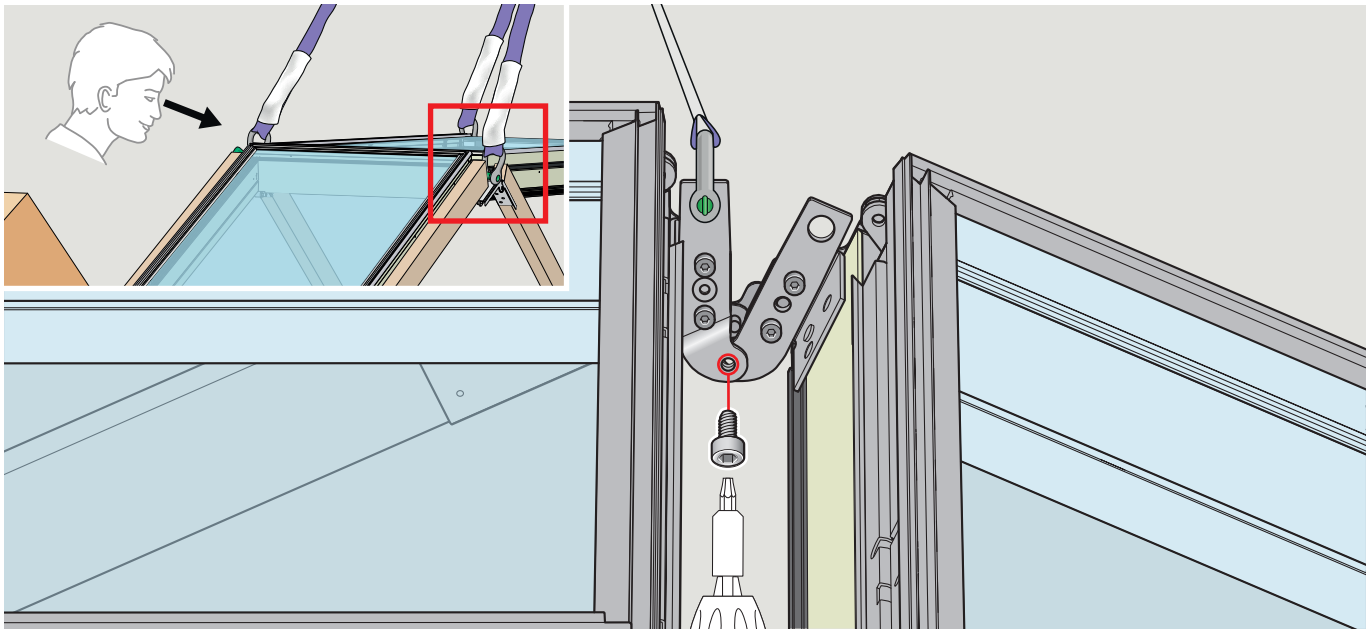

21

A2-R

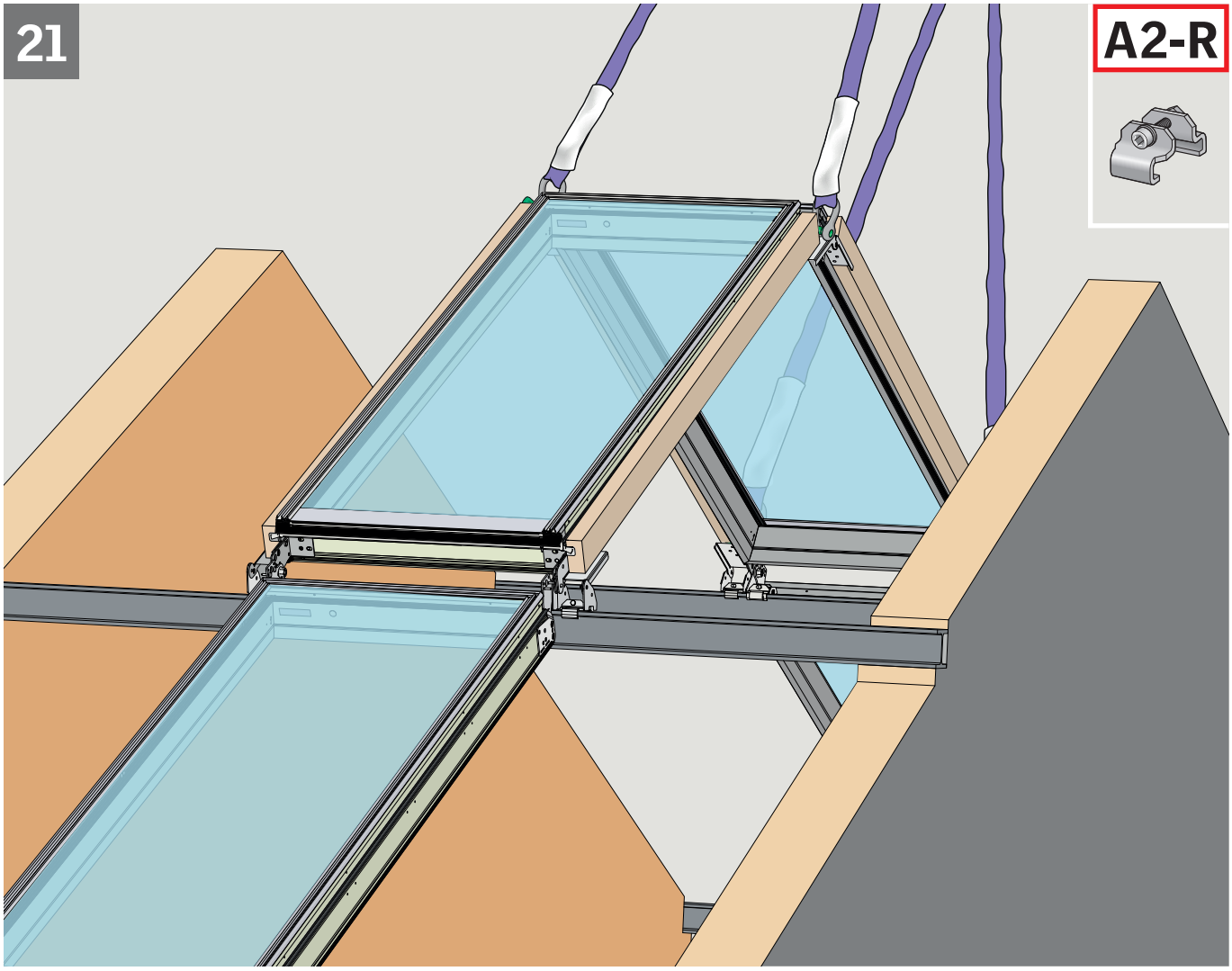

1

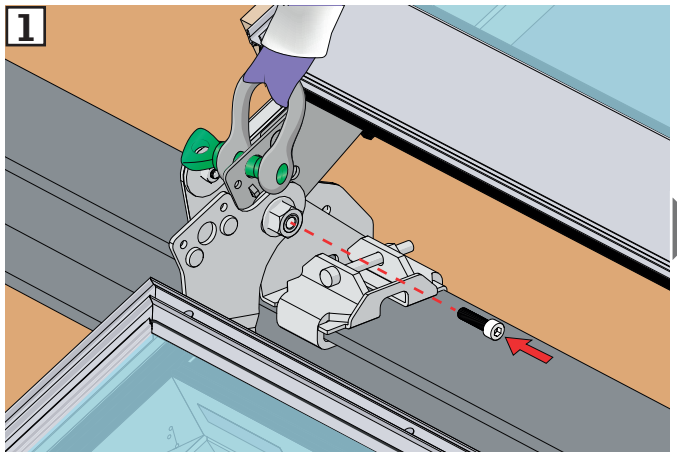

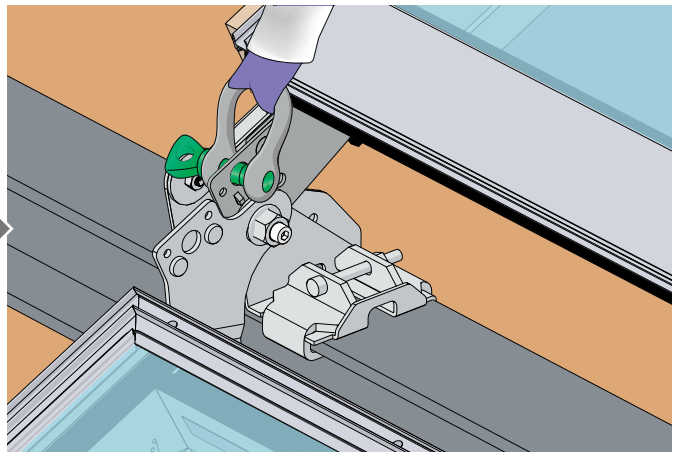

2

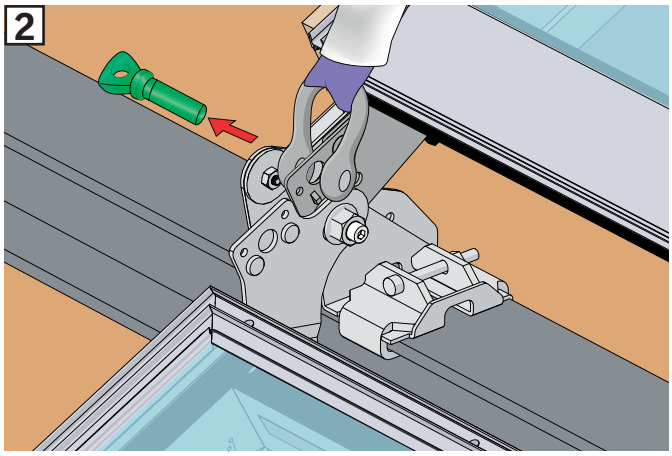

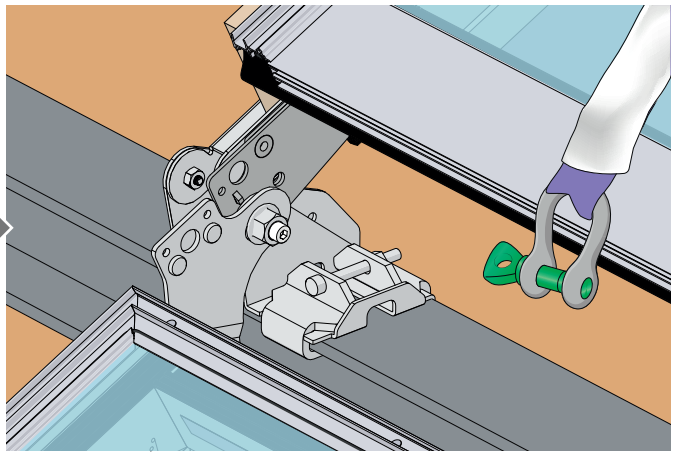

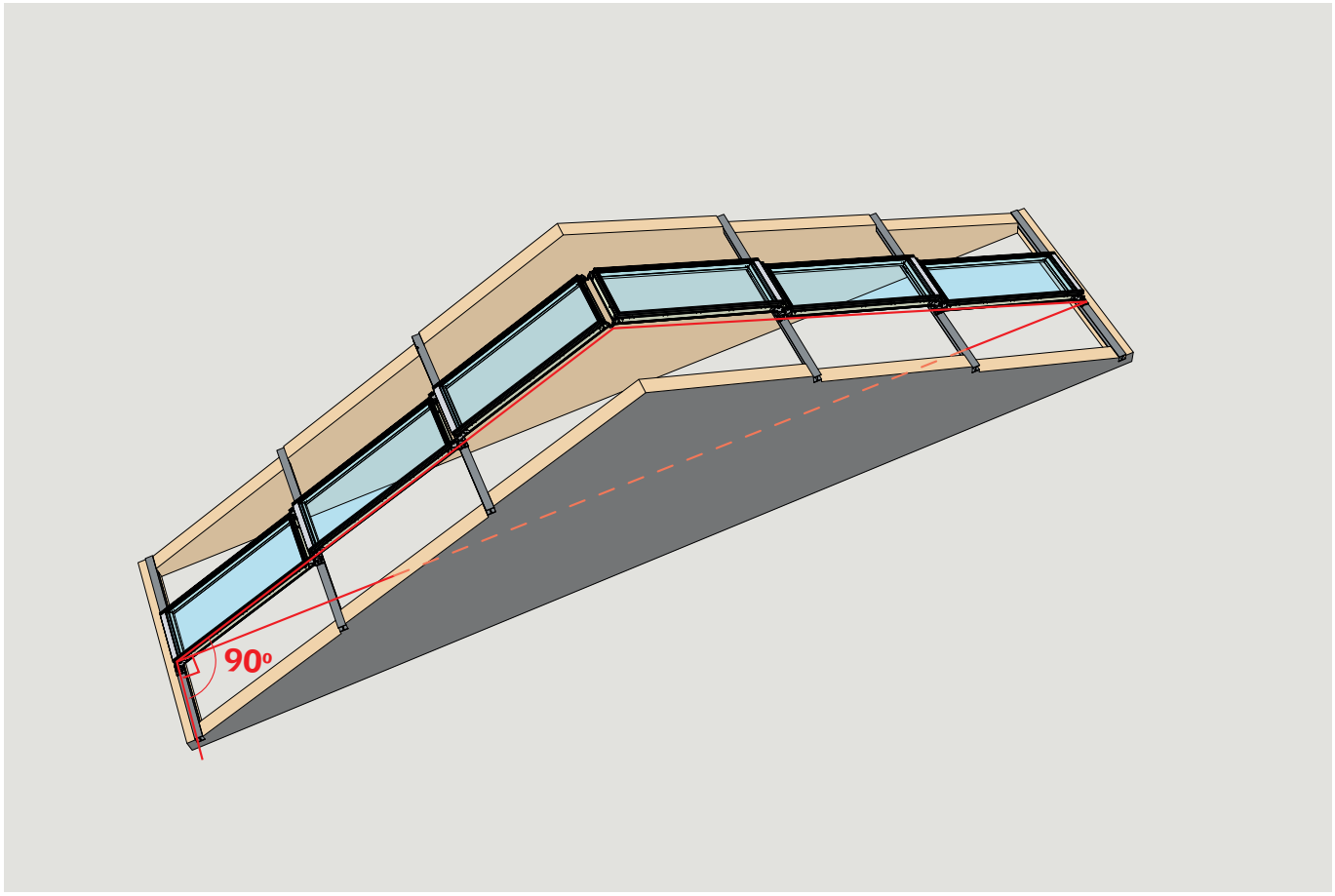
90º

22

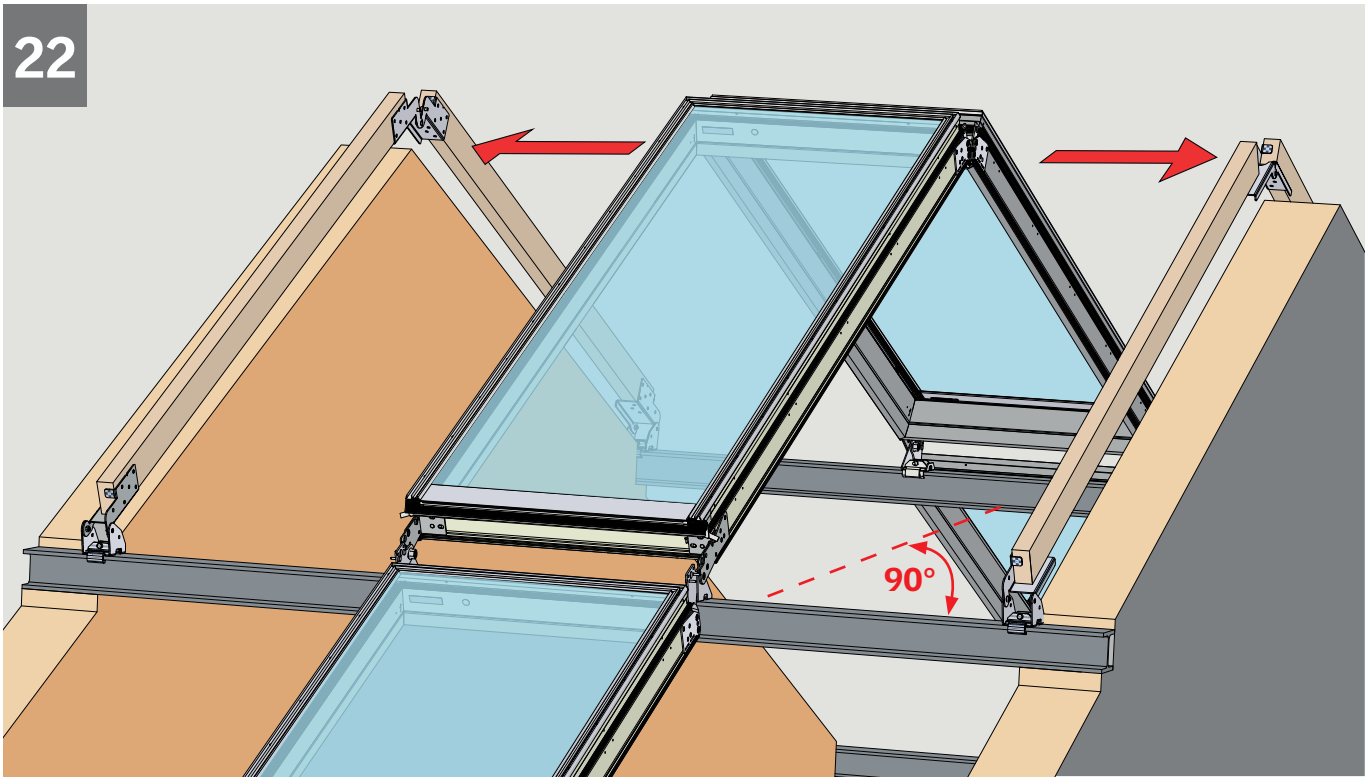

23

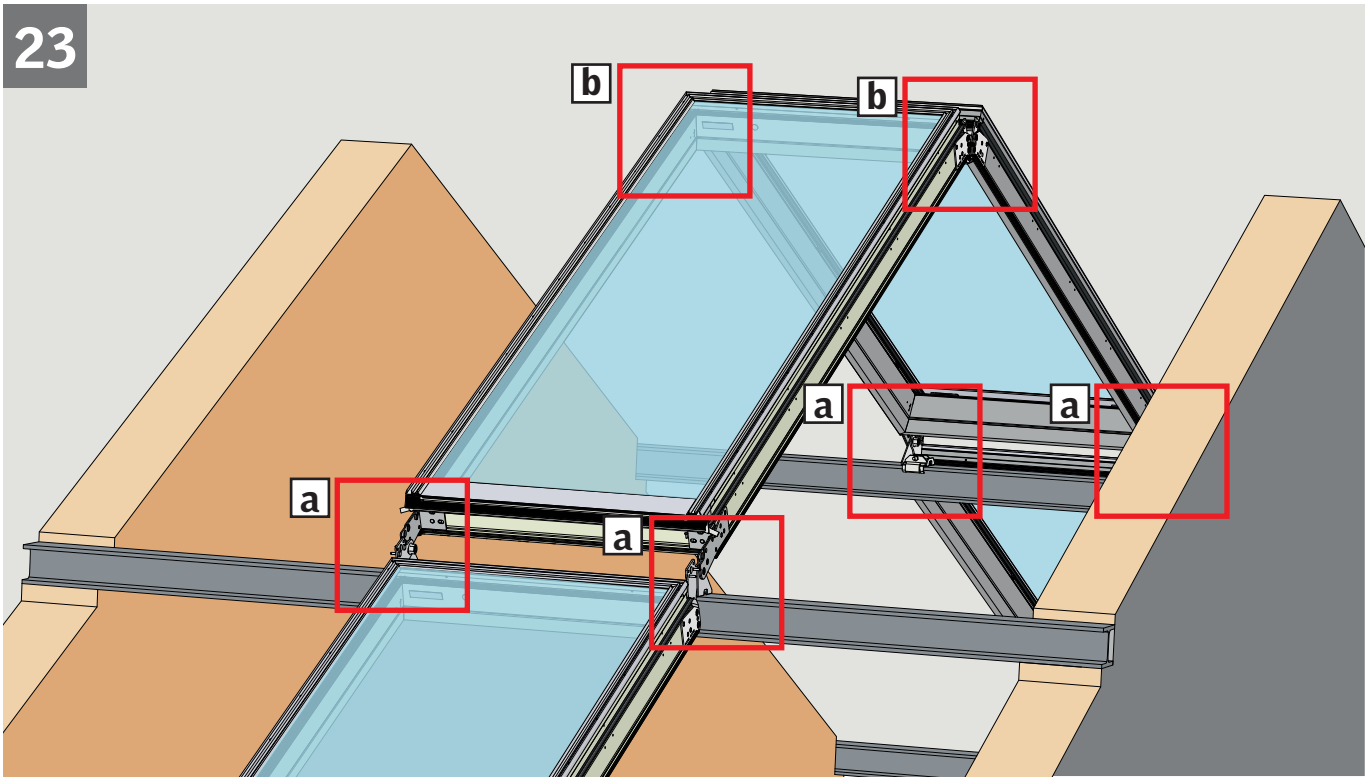

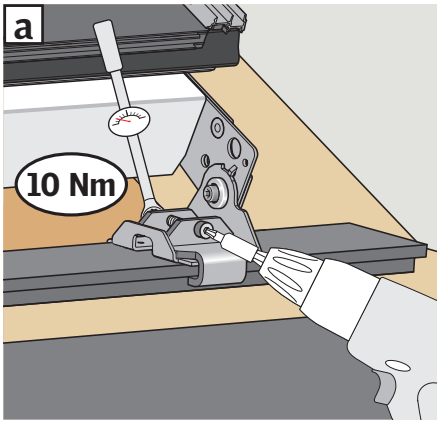

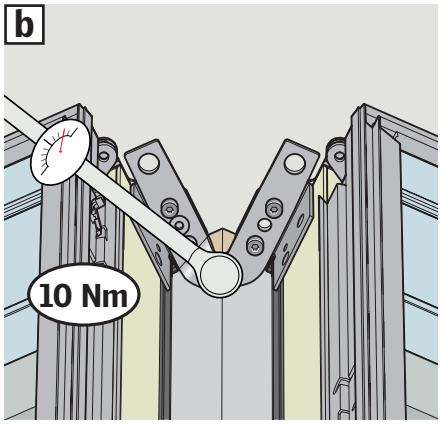

24

A4-R

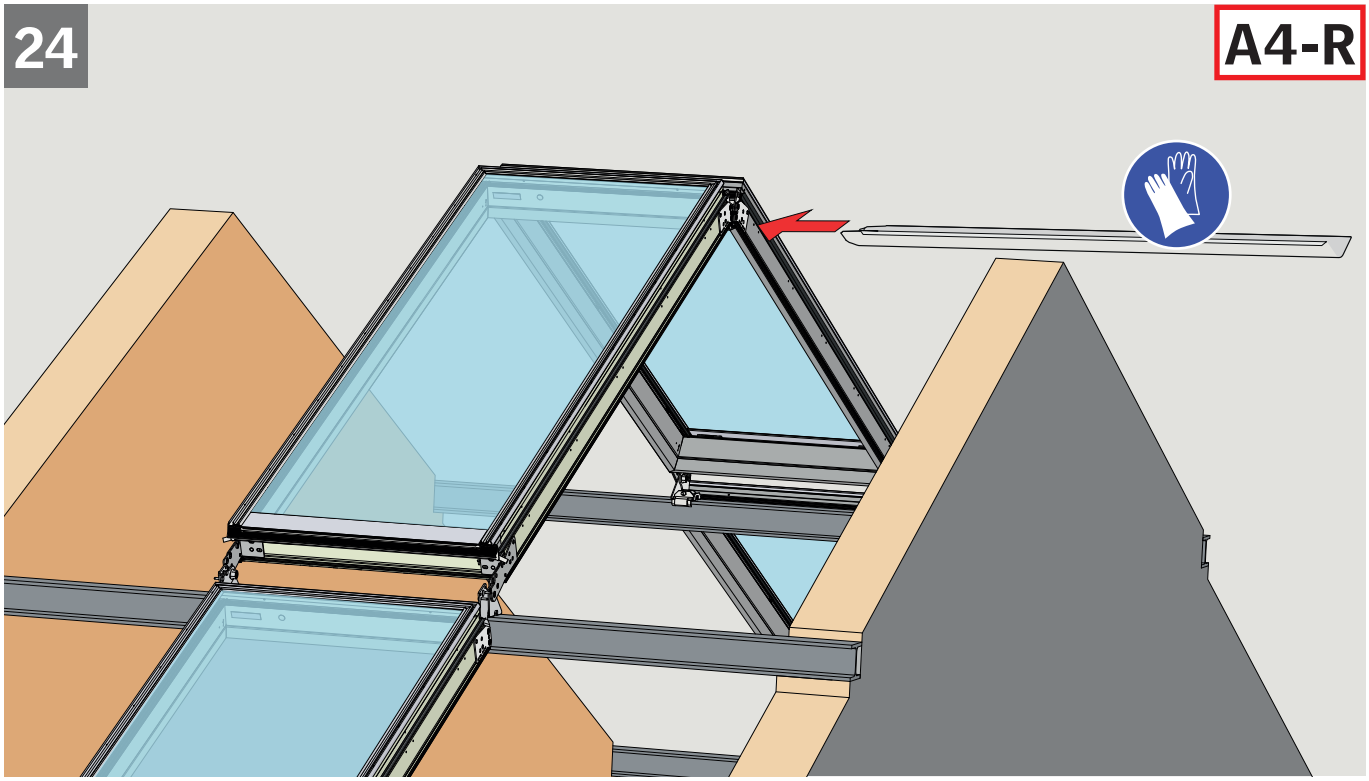

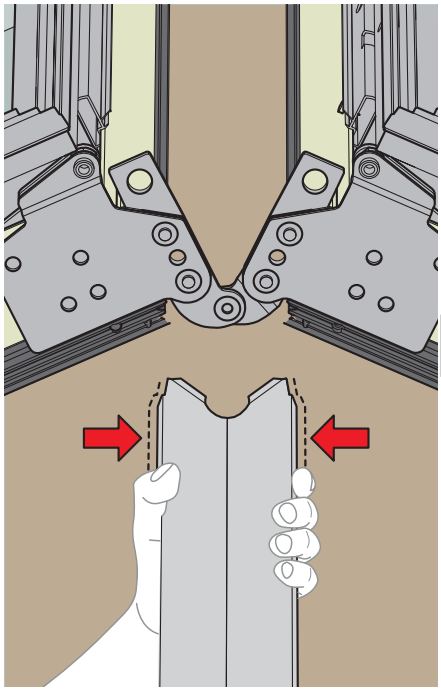

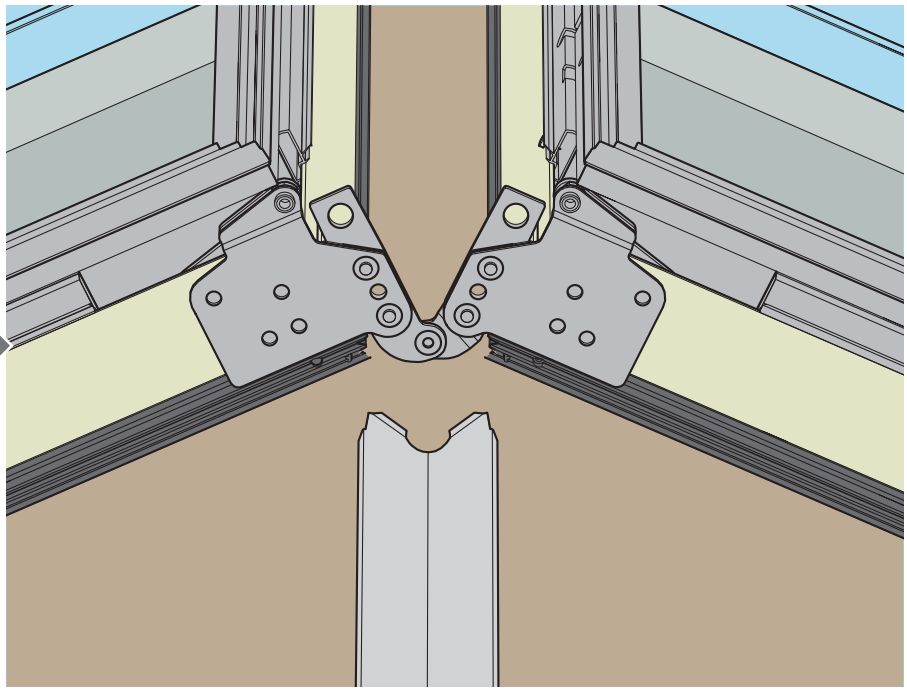

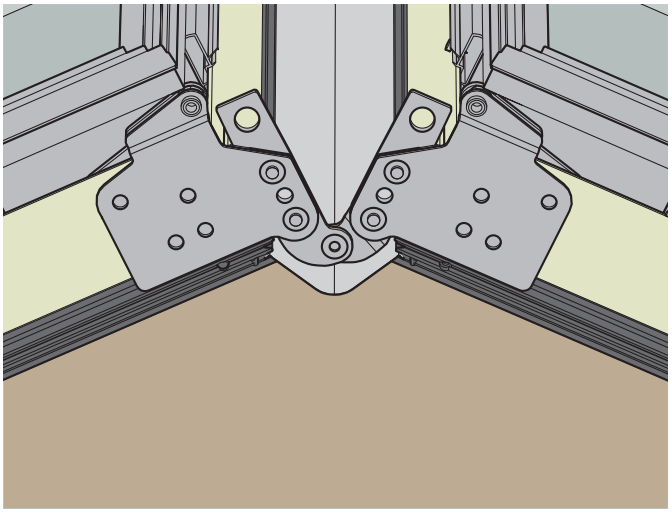

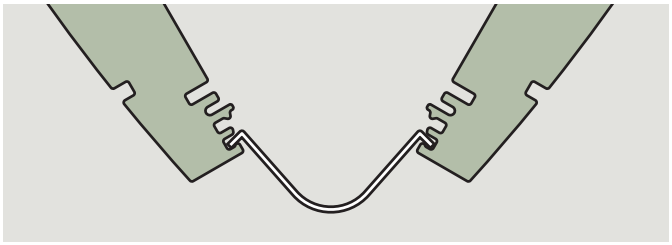

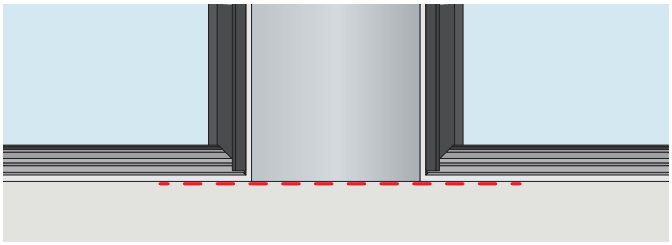

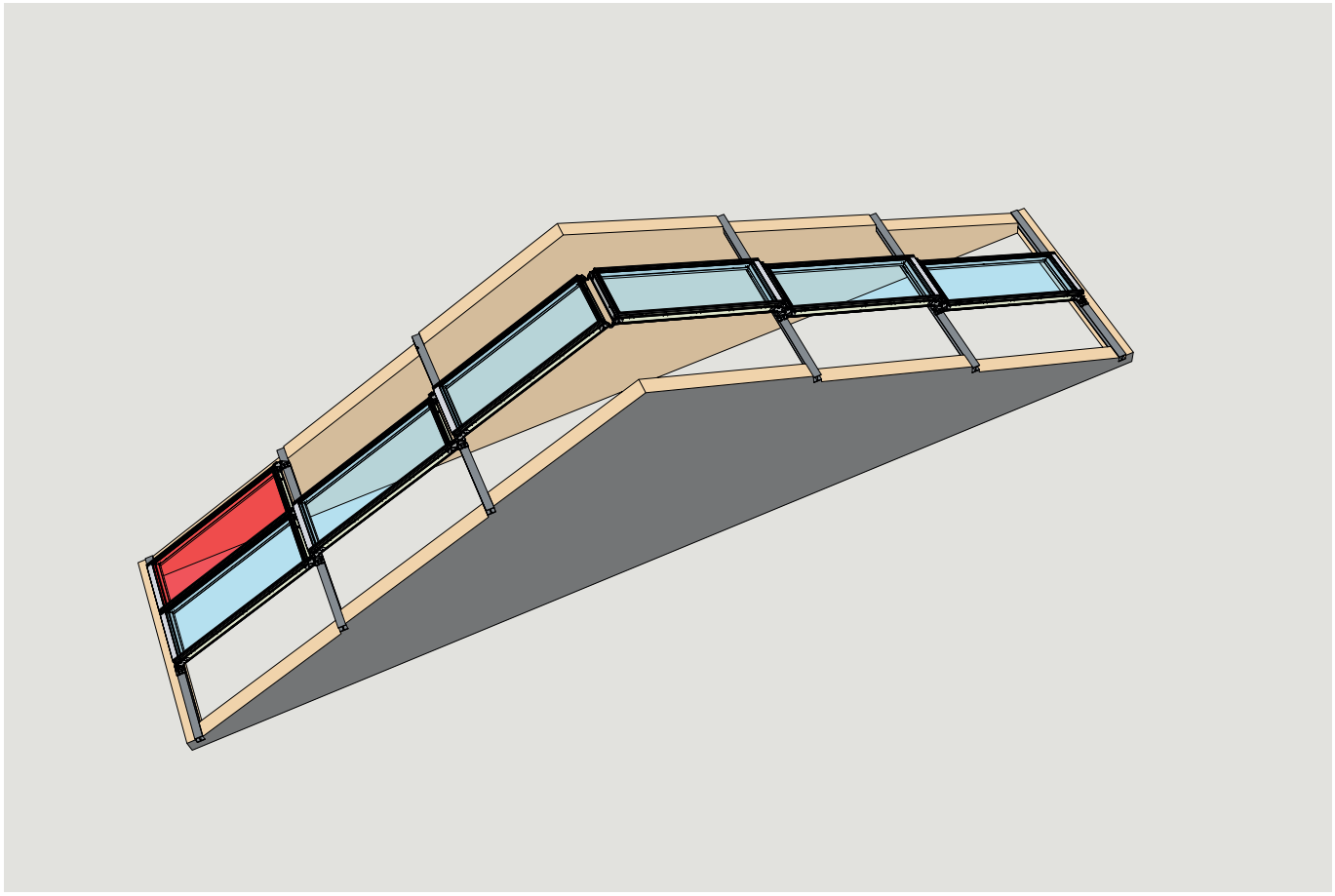

2 ▶ 4

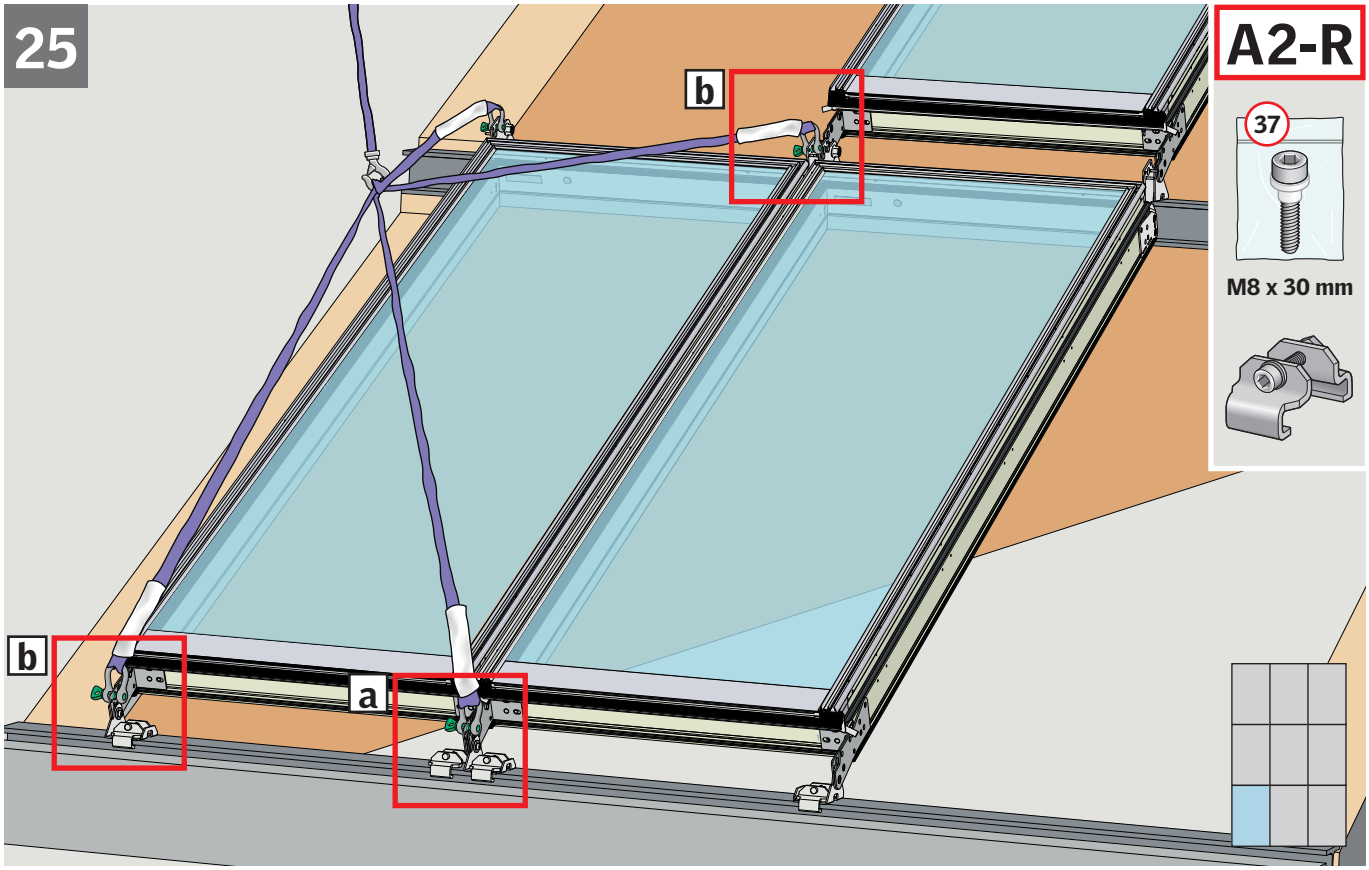

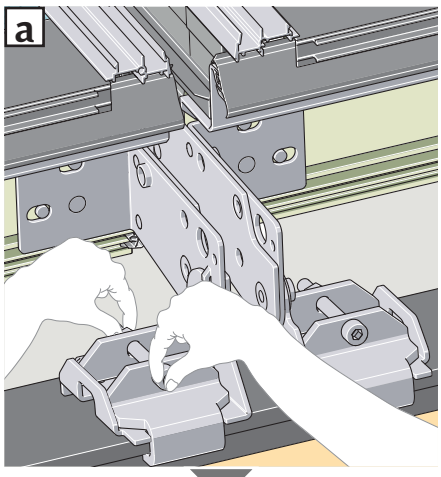

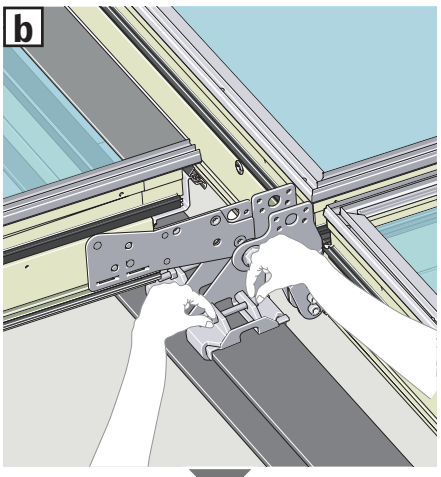

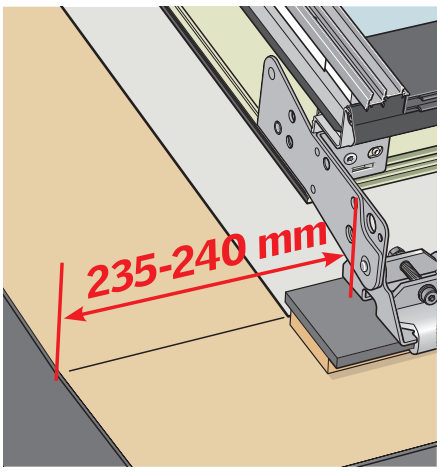

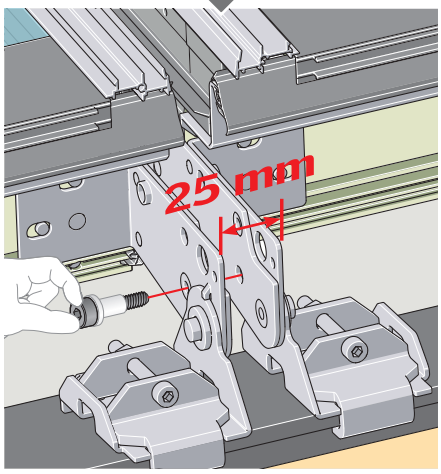

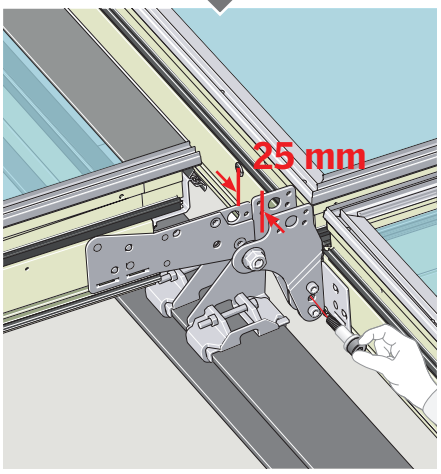

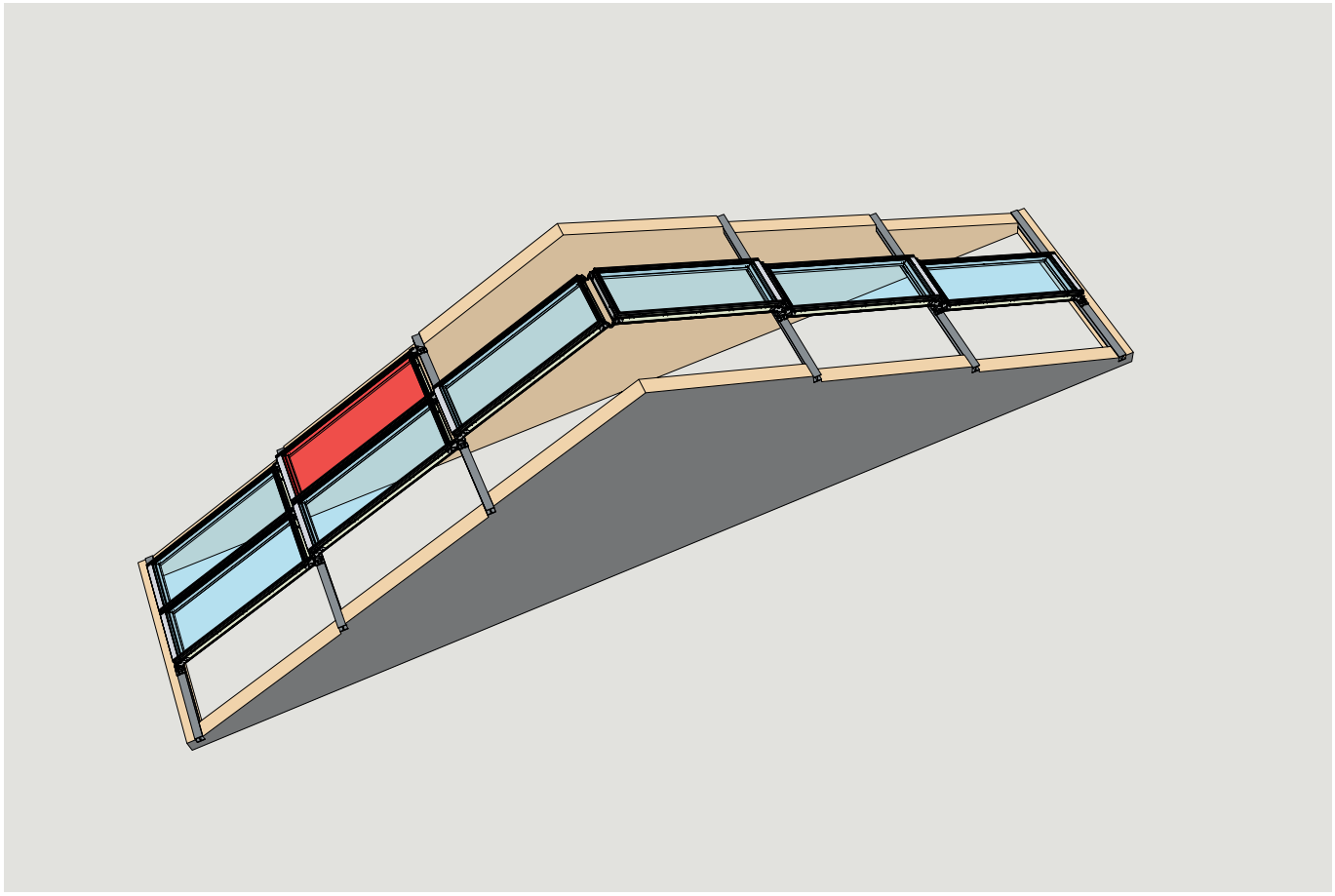

8 ▶ 12

26

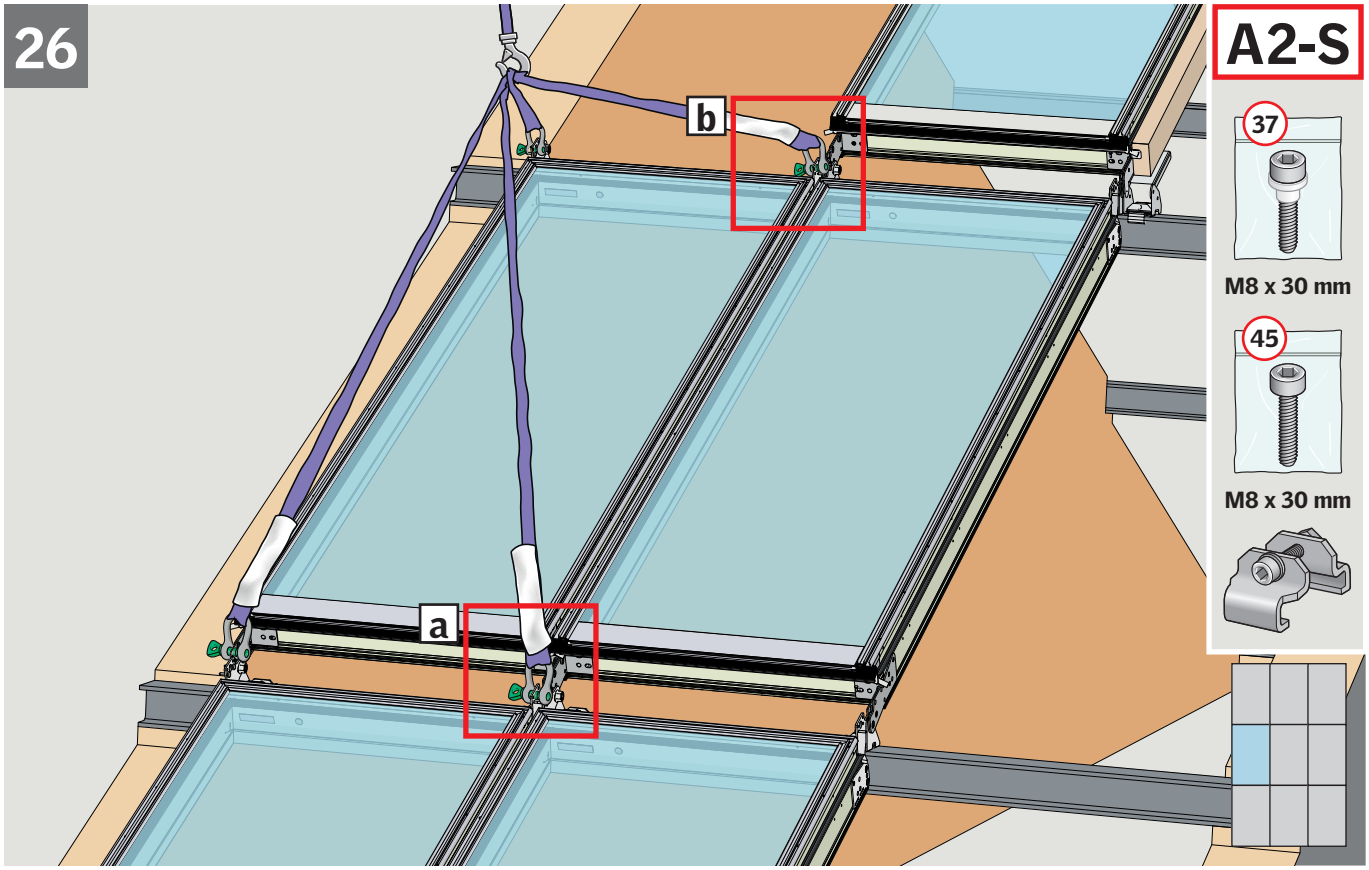

A2-S

M8 x 30 mm

M8 x 30 mm

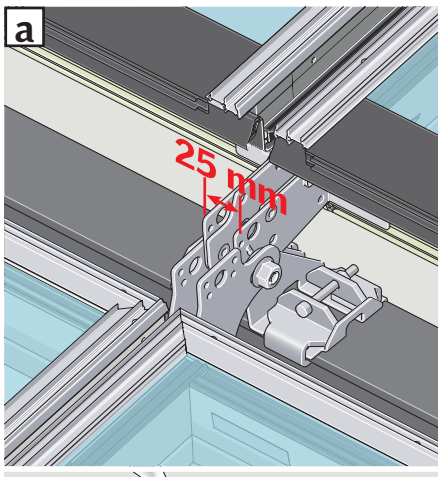

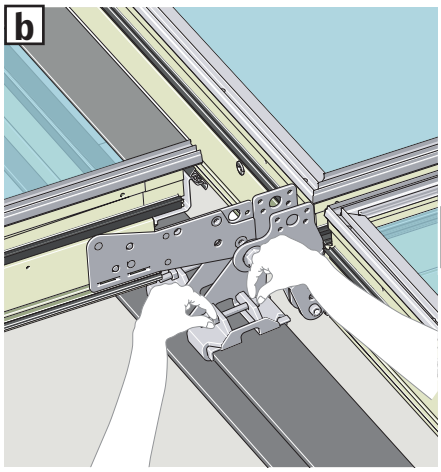

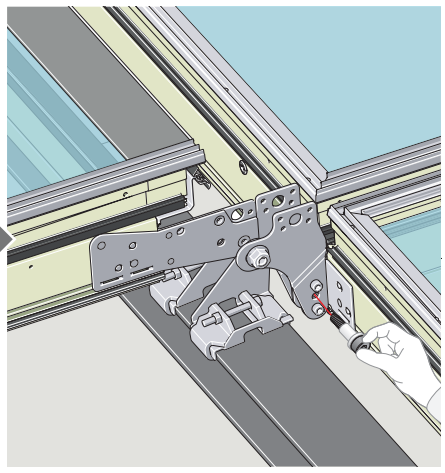

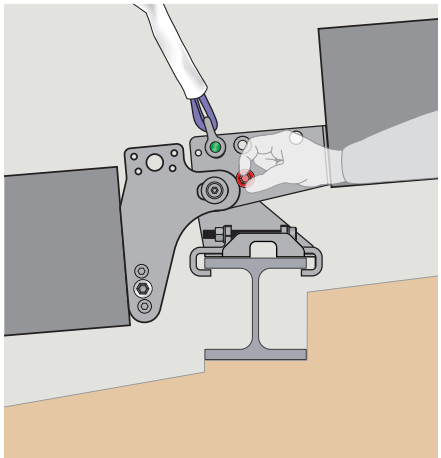

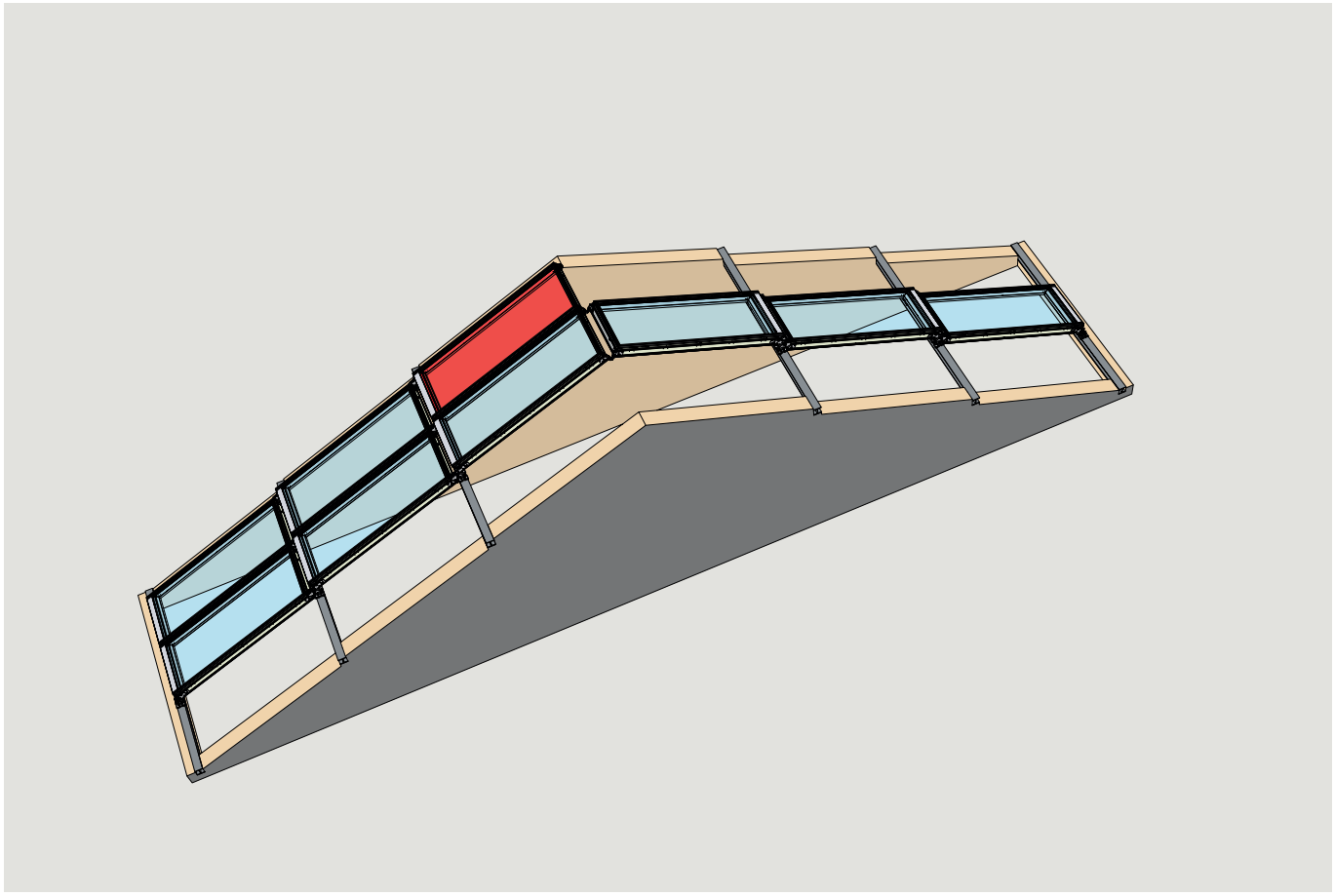

27

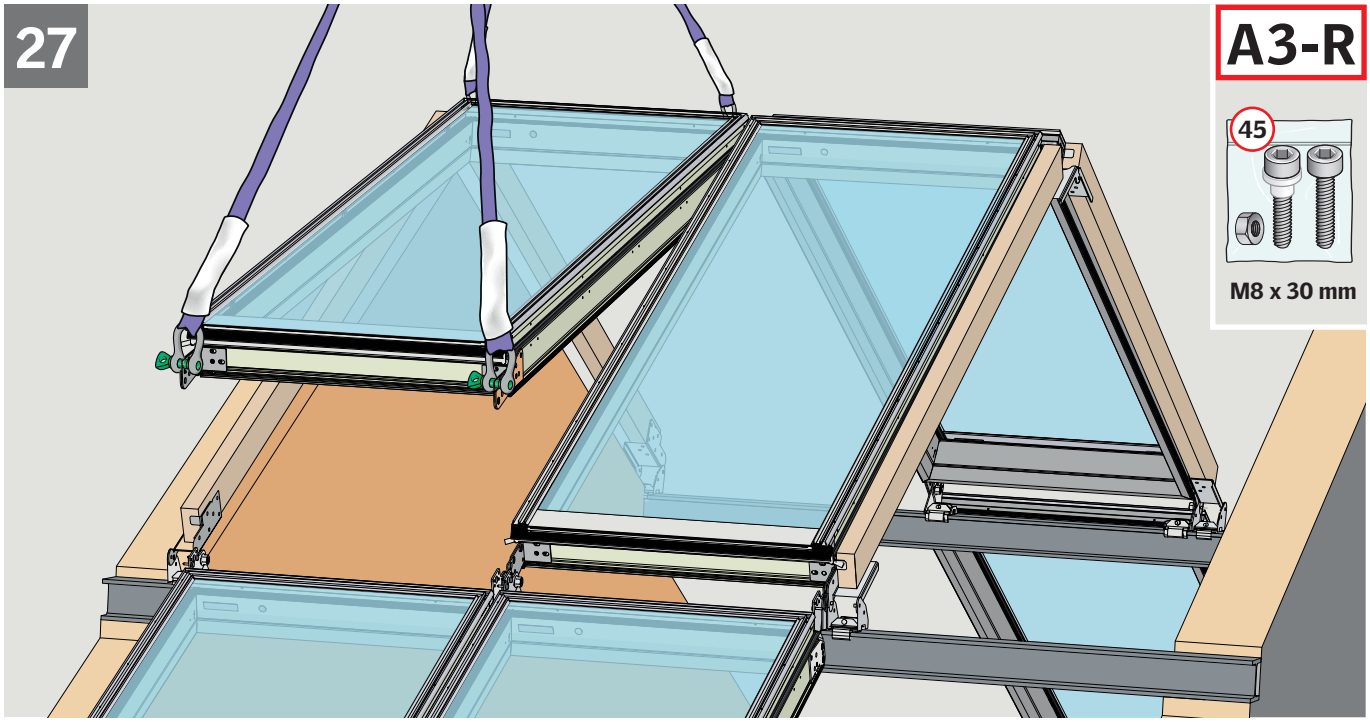

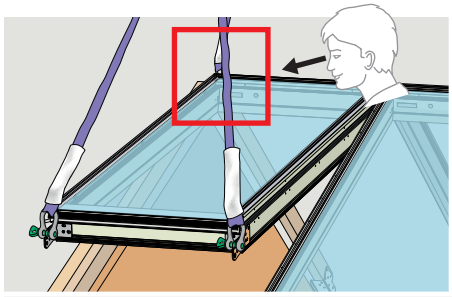

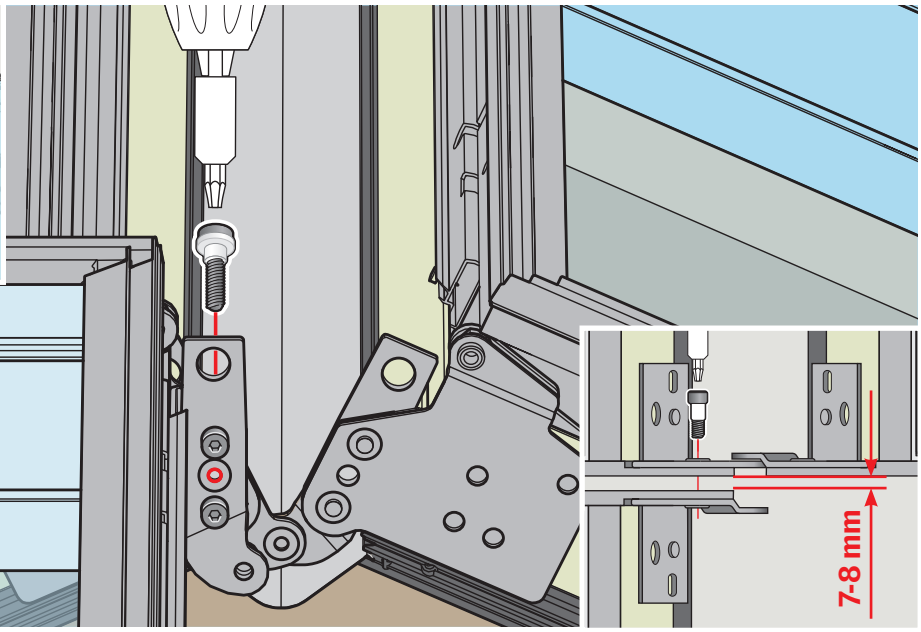

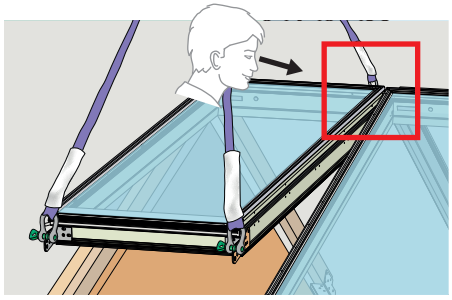

15 ▶ 19

28

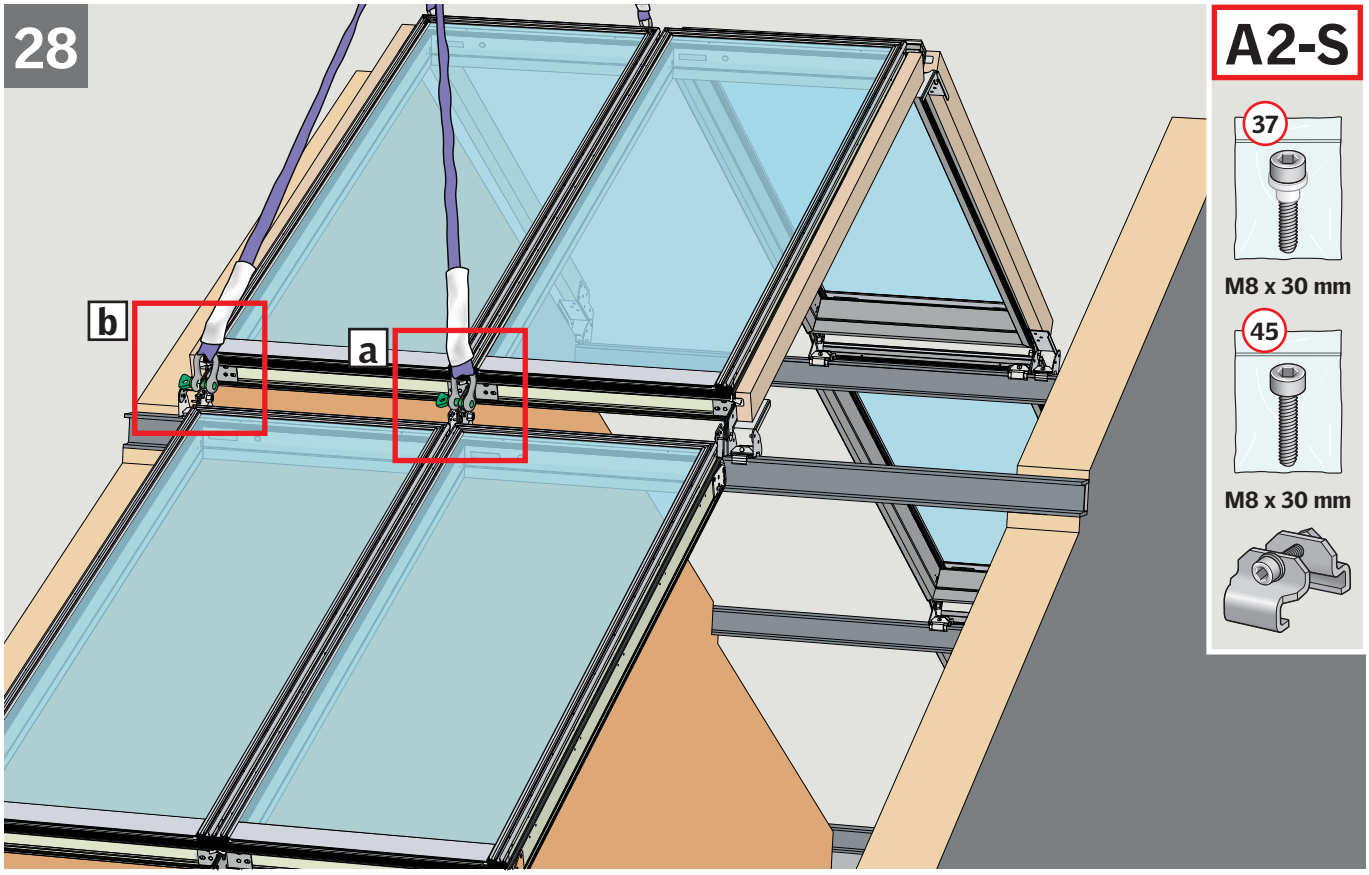

A2-S

M8 x 30 mm

M8 x 30 mm

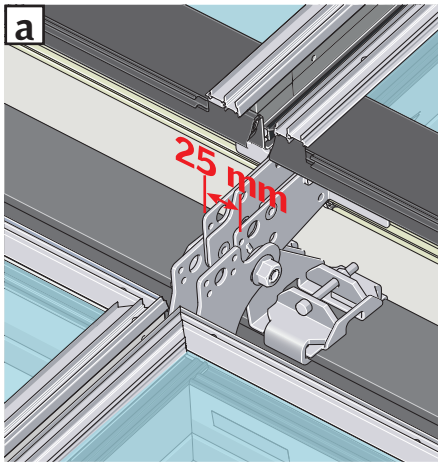

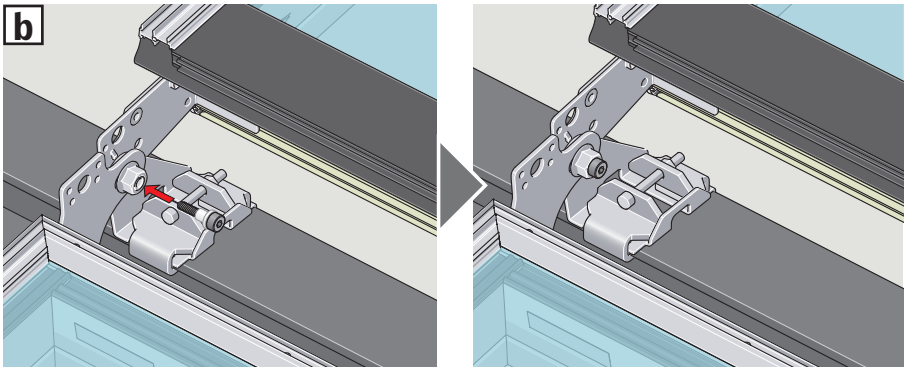

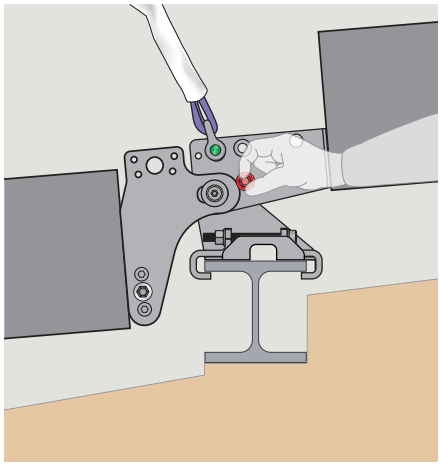

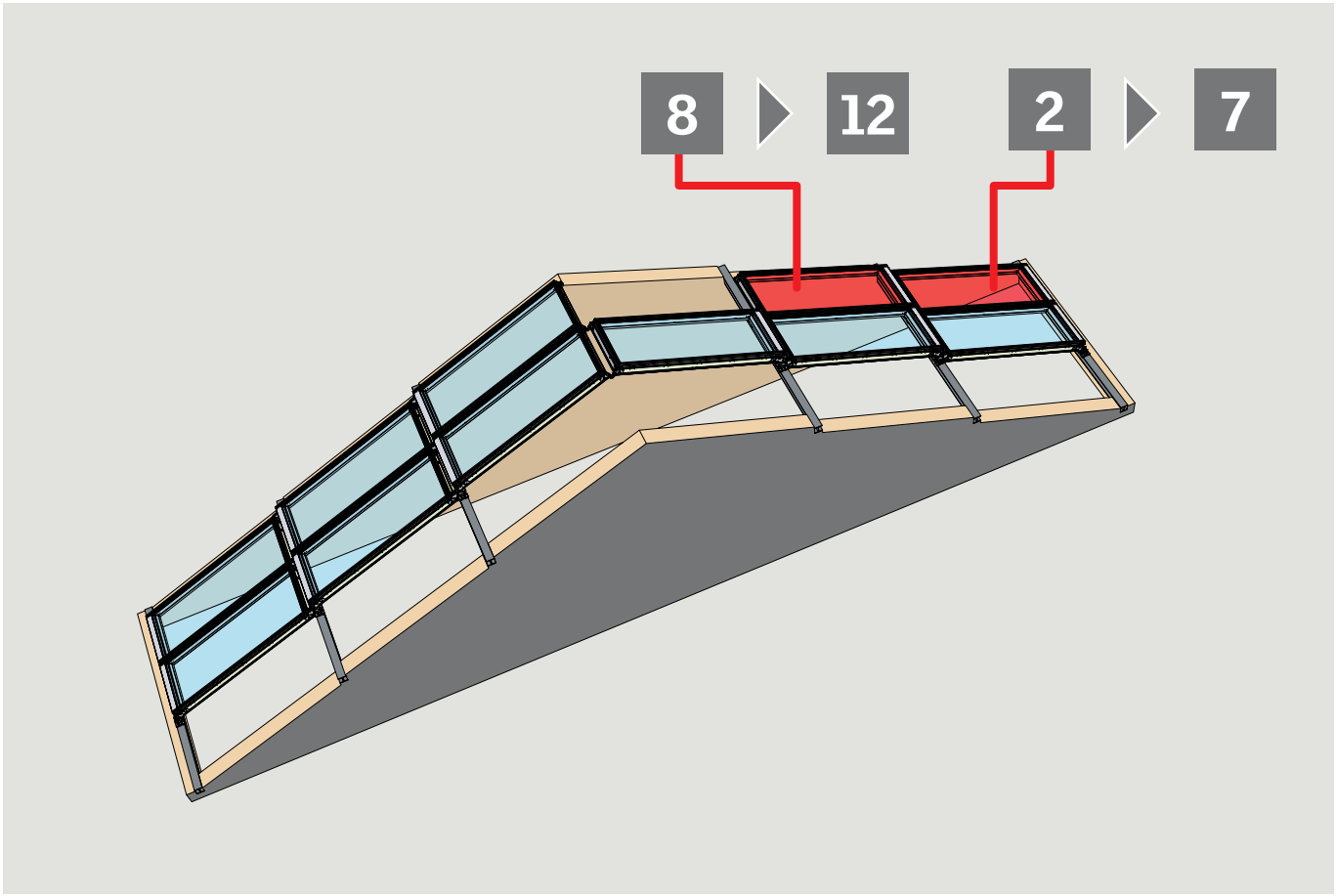
8
12
2
7

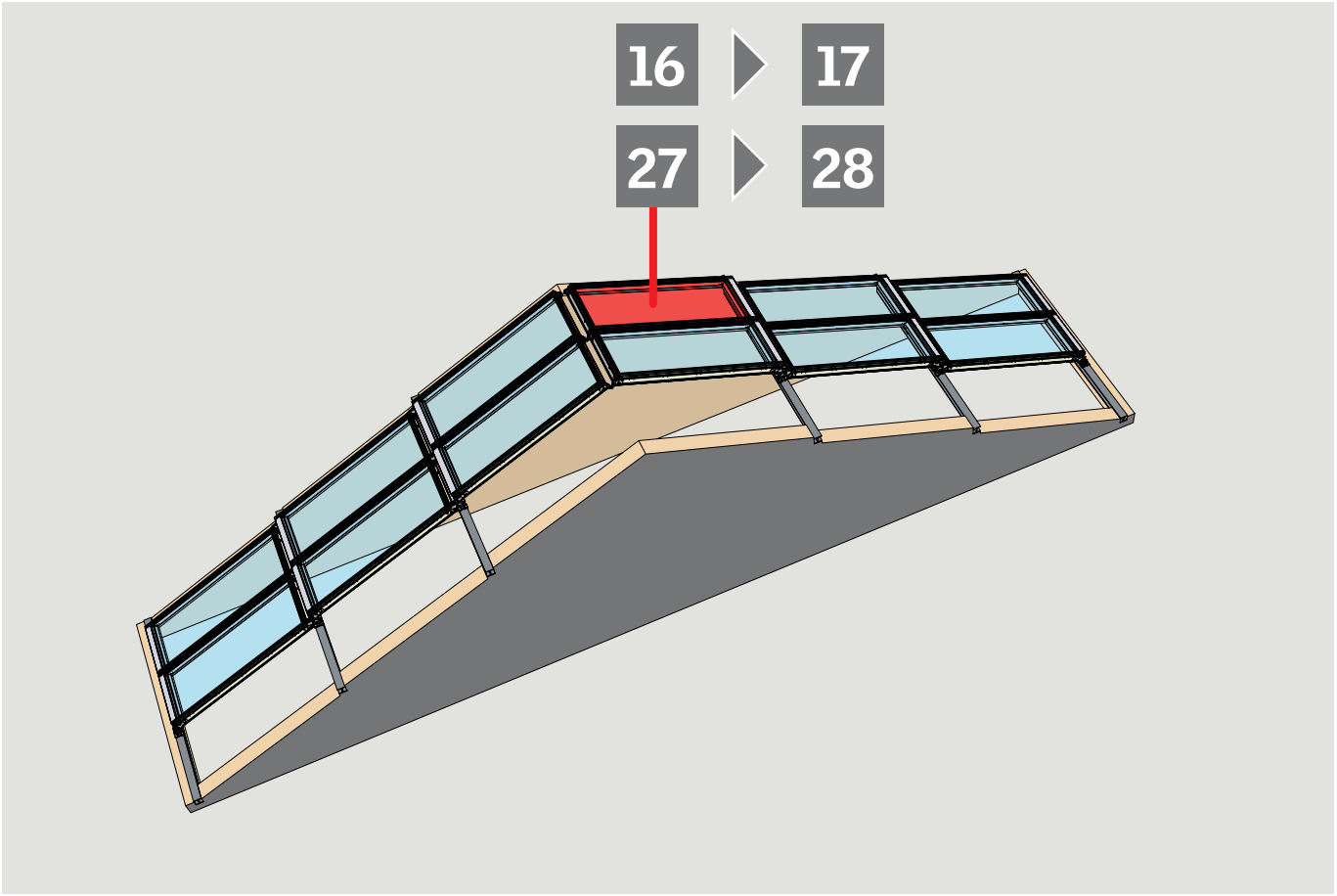
16
17
27
28

27 ▶ 28

29

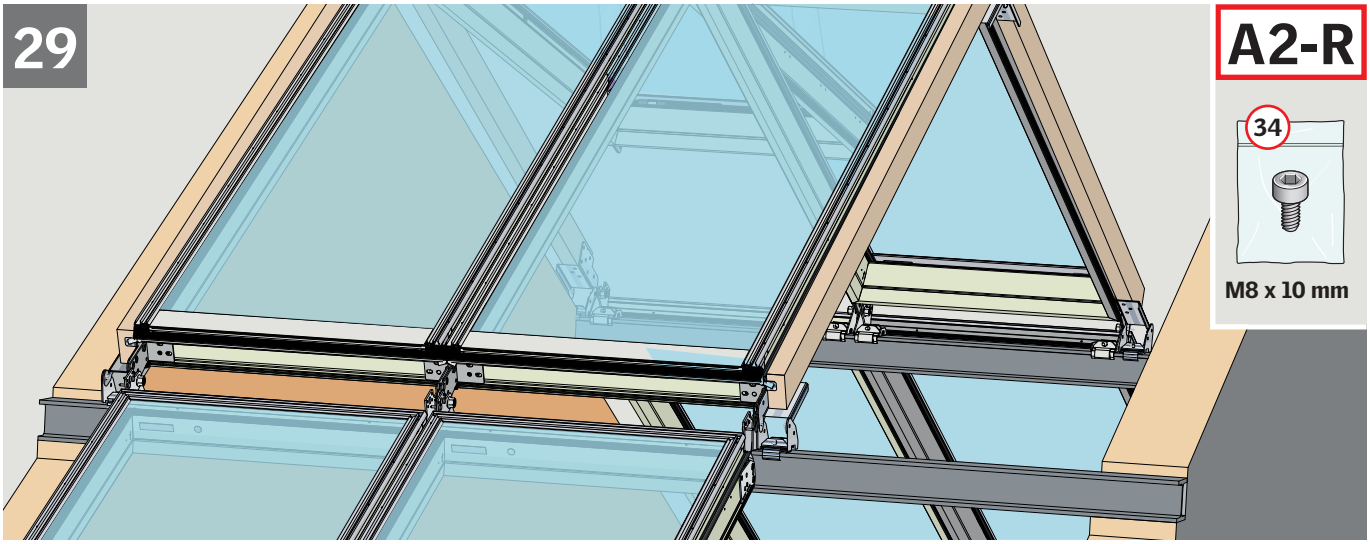

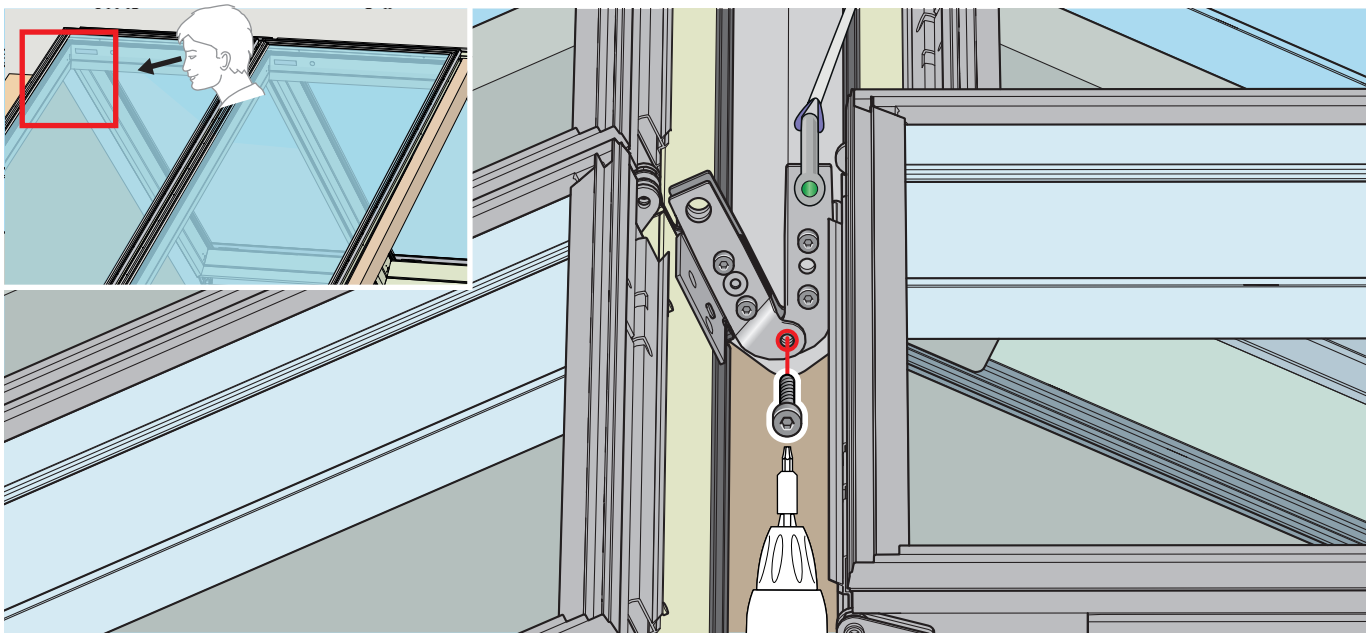

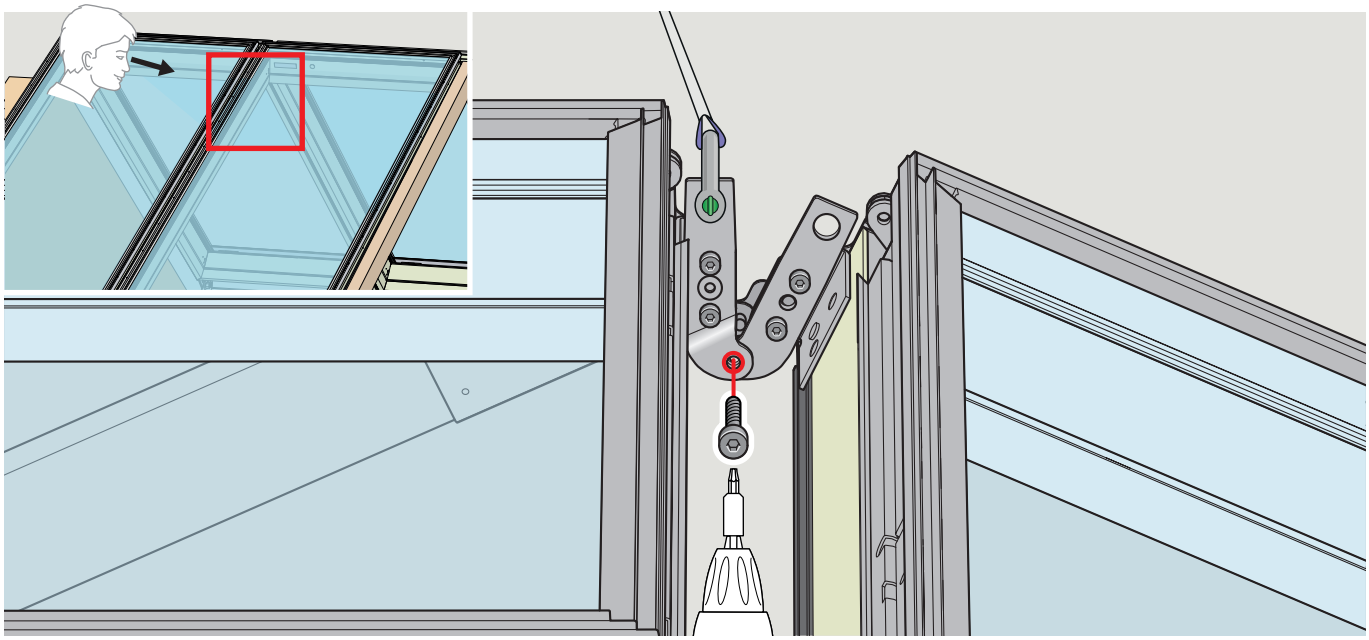

30

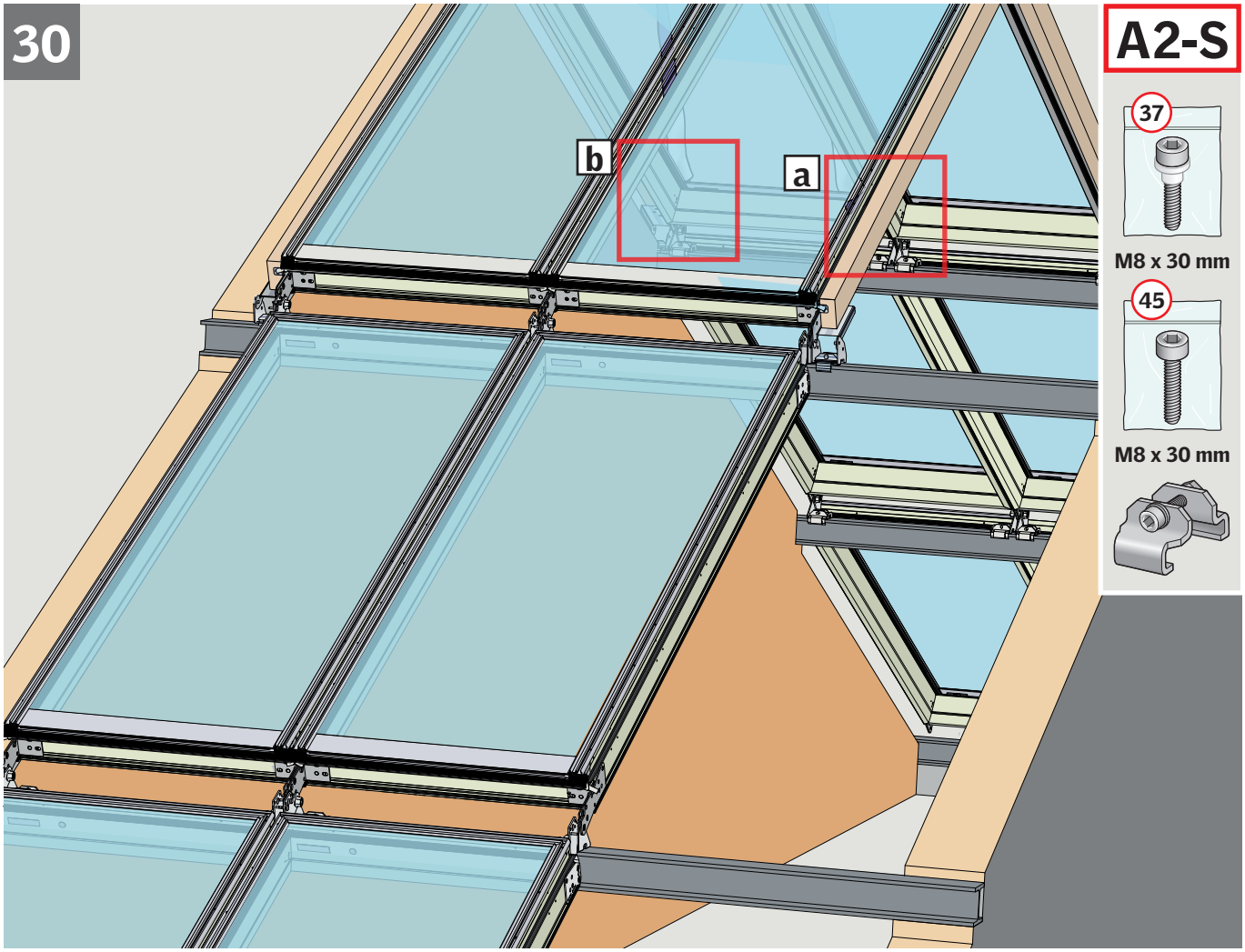

A2-S

M8 x 30 mm

M8 x 30 mm

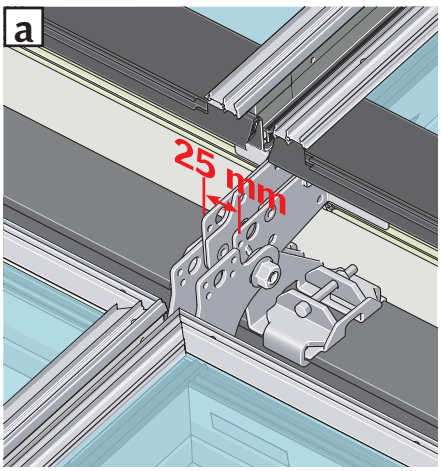

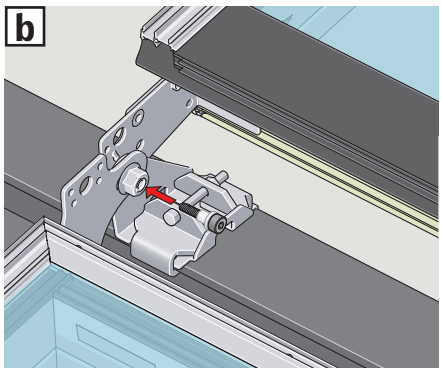

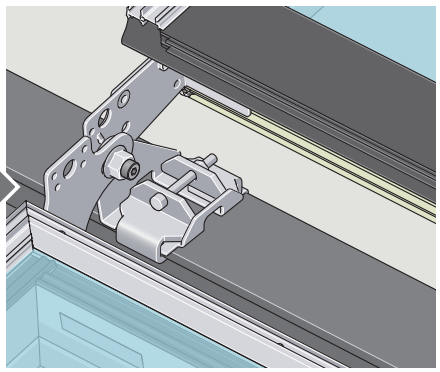

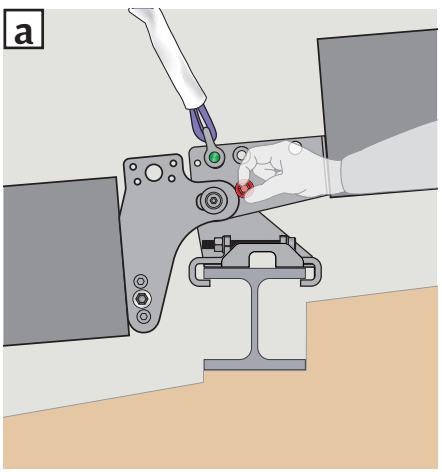

31

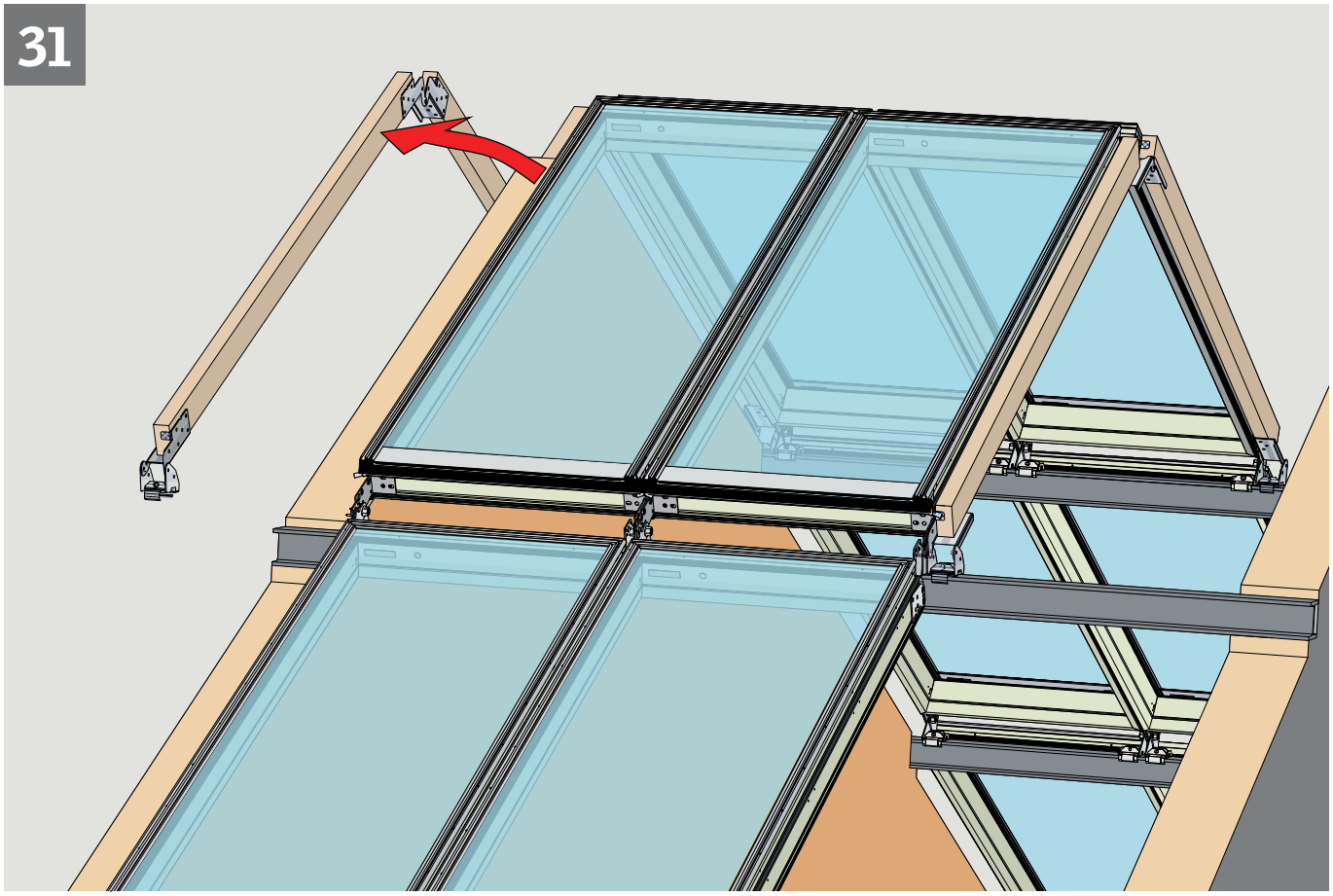

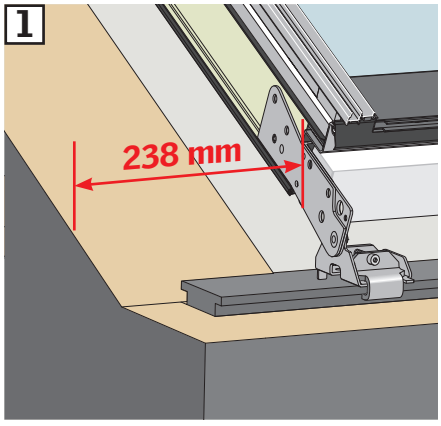

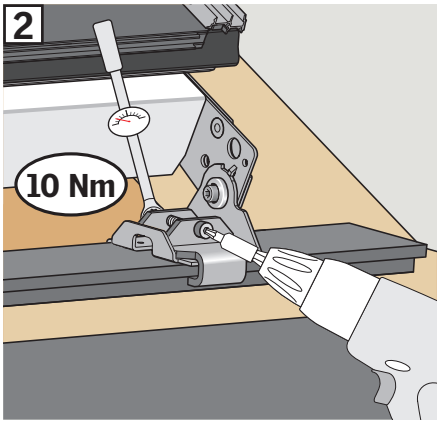

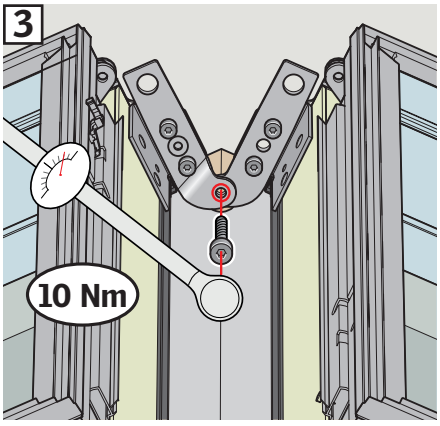

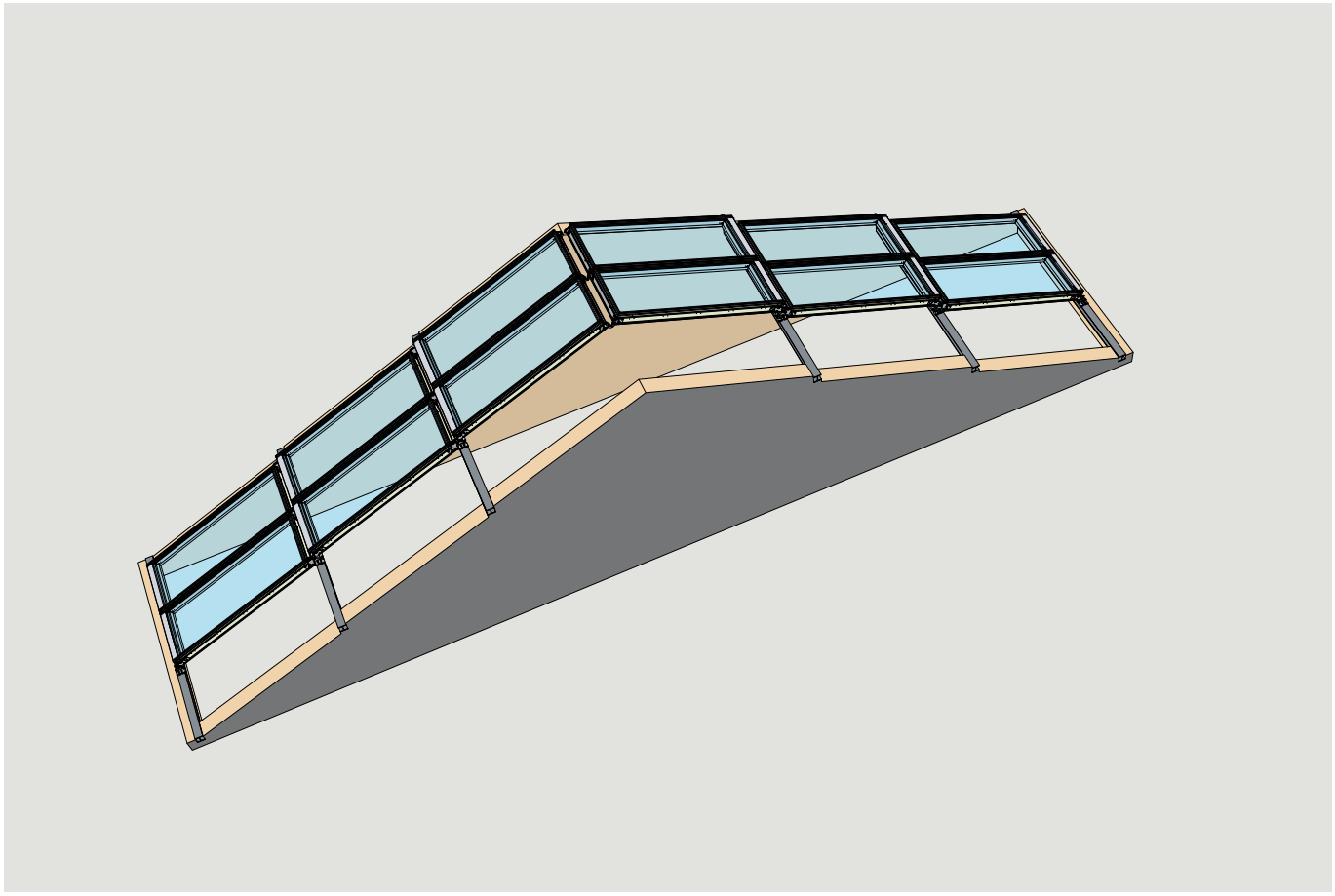

32

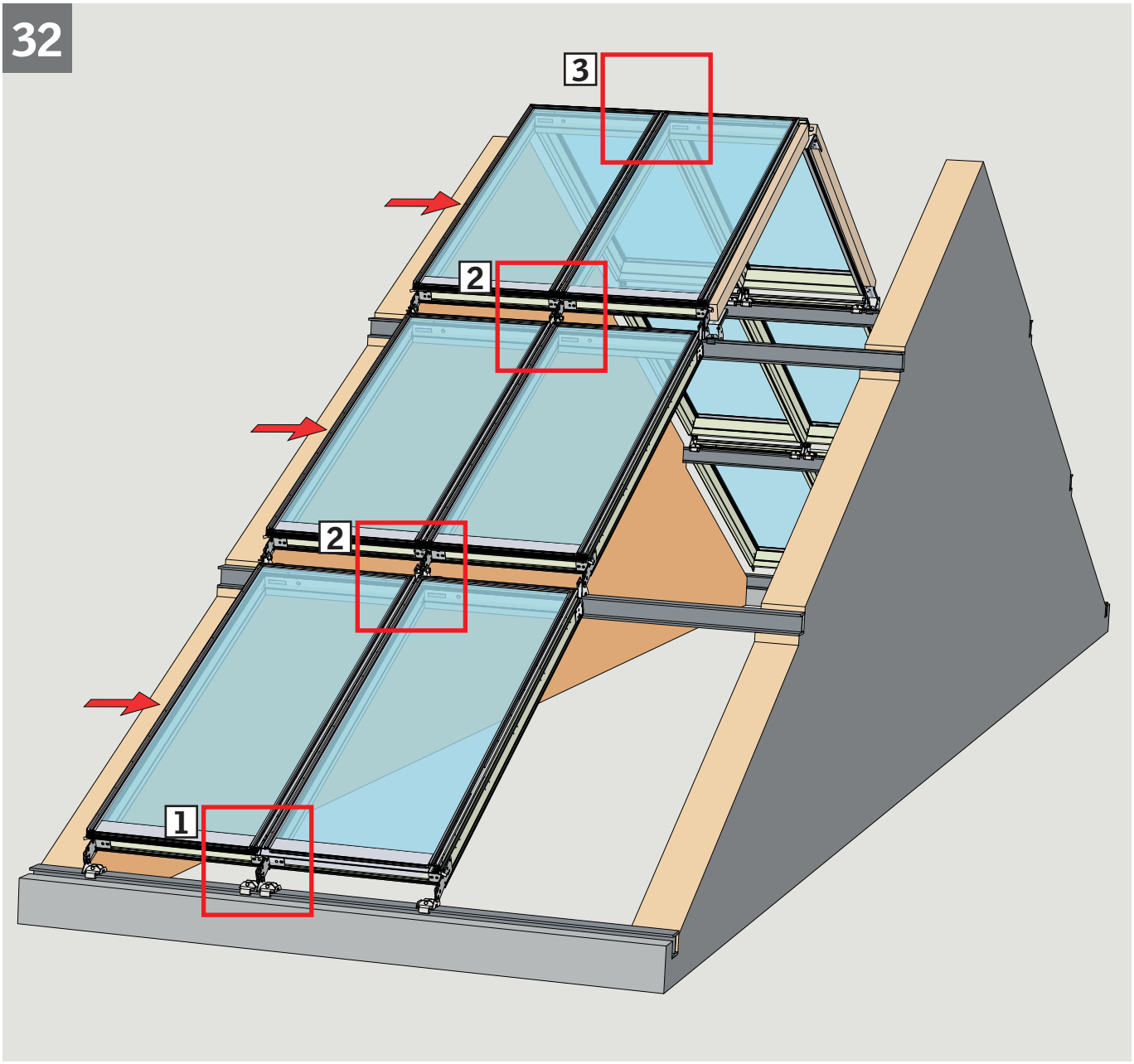

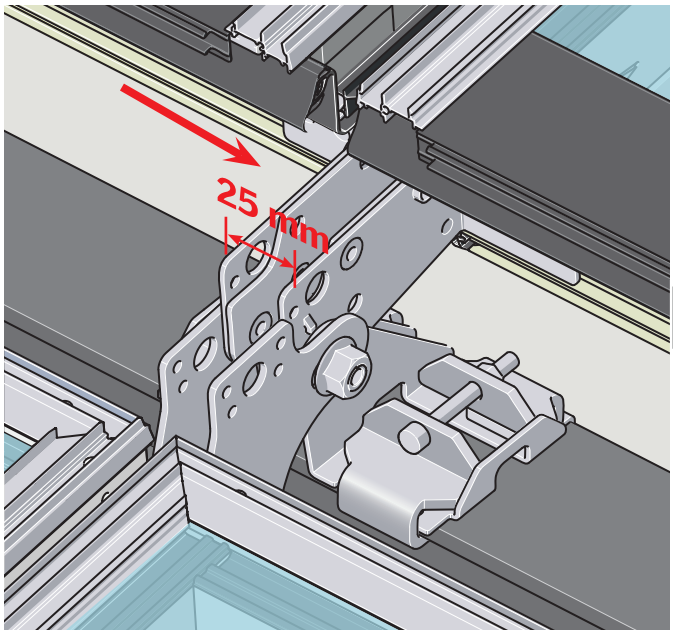

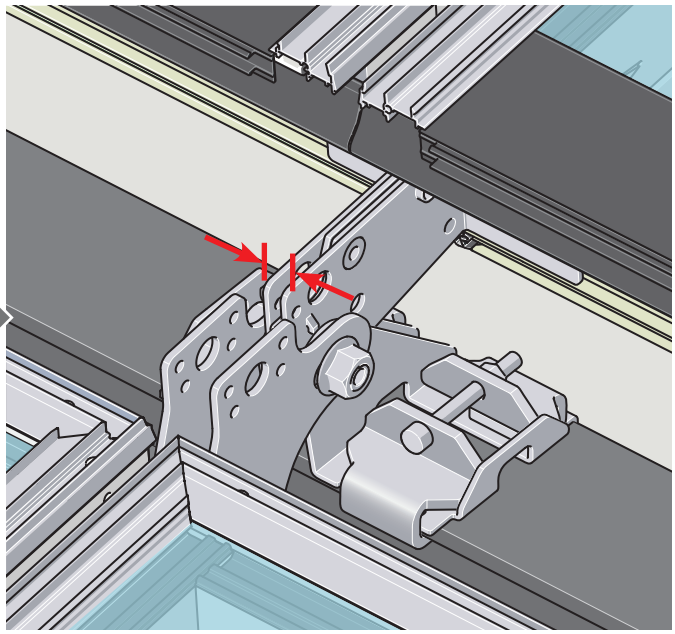

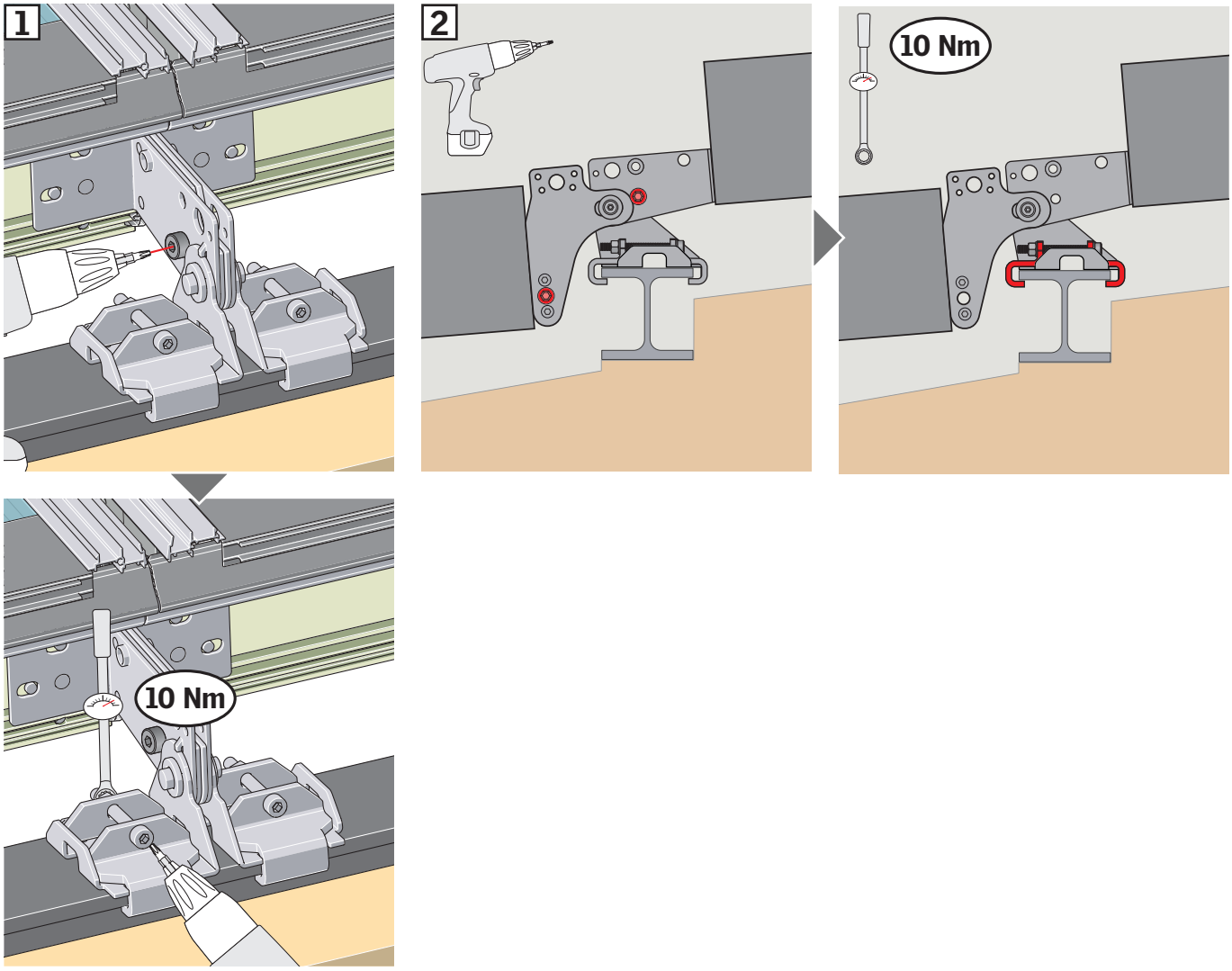
1
2
10 Nm
10 Nm

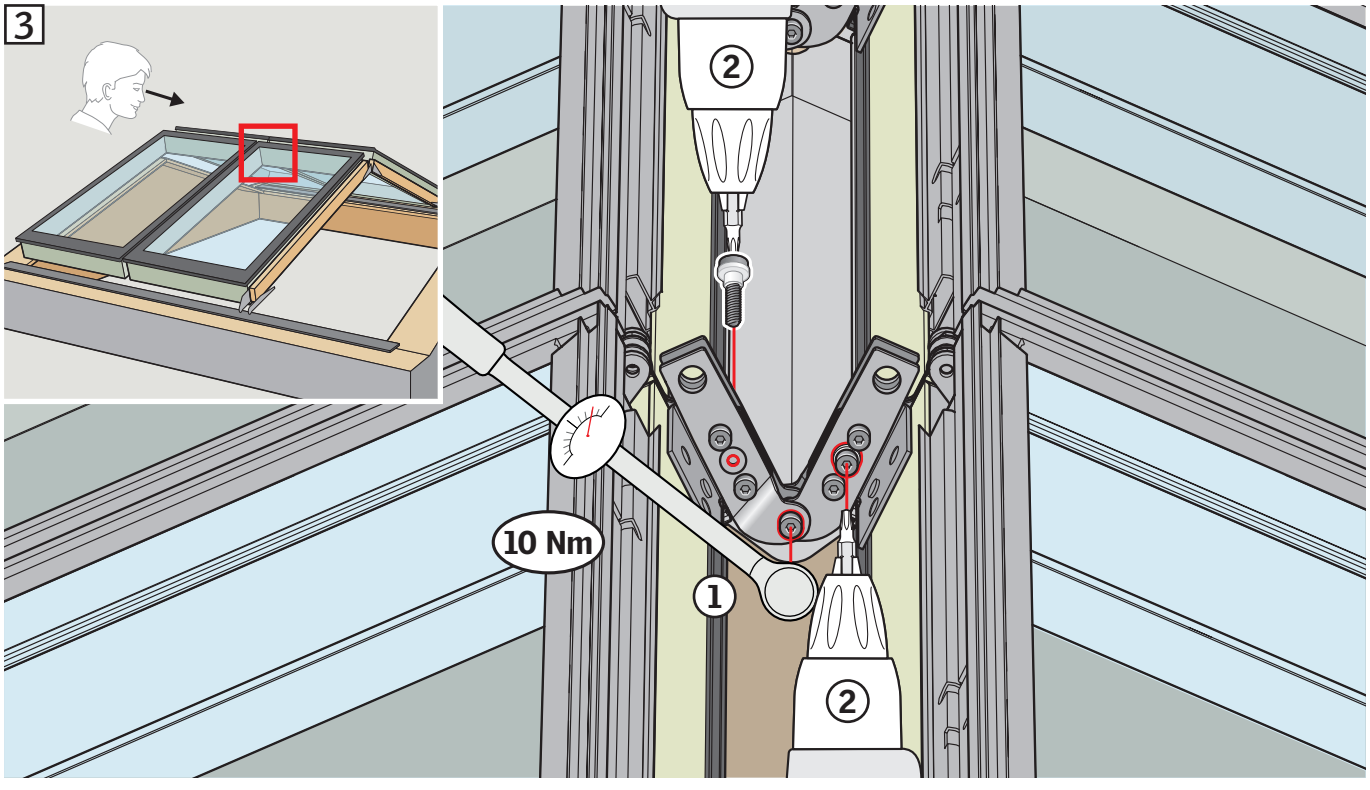
3
2
10 Nm
1
2

33

A4-R

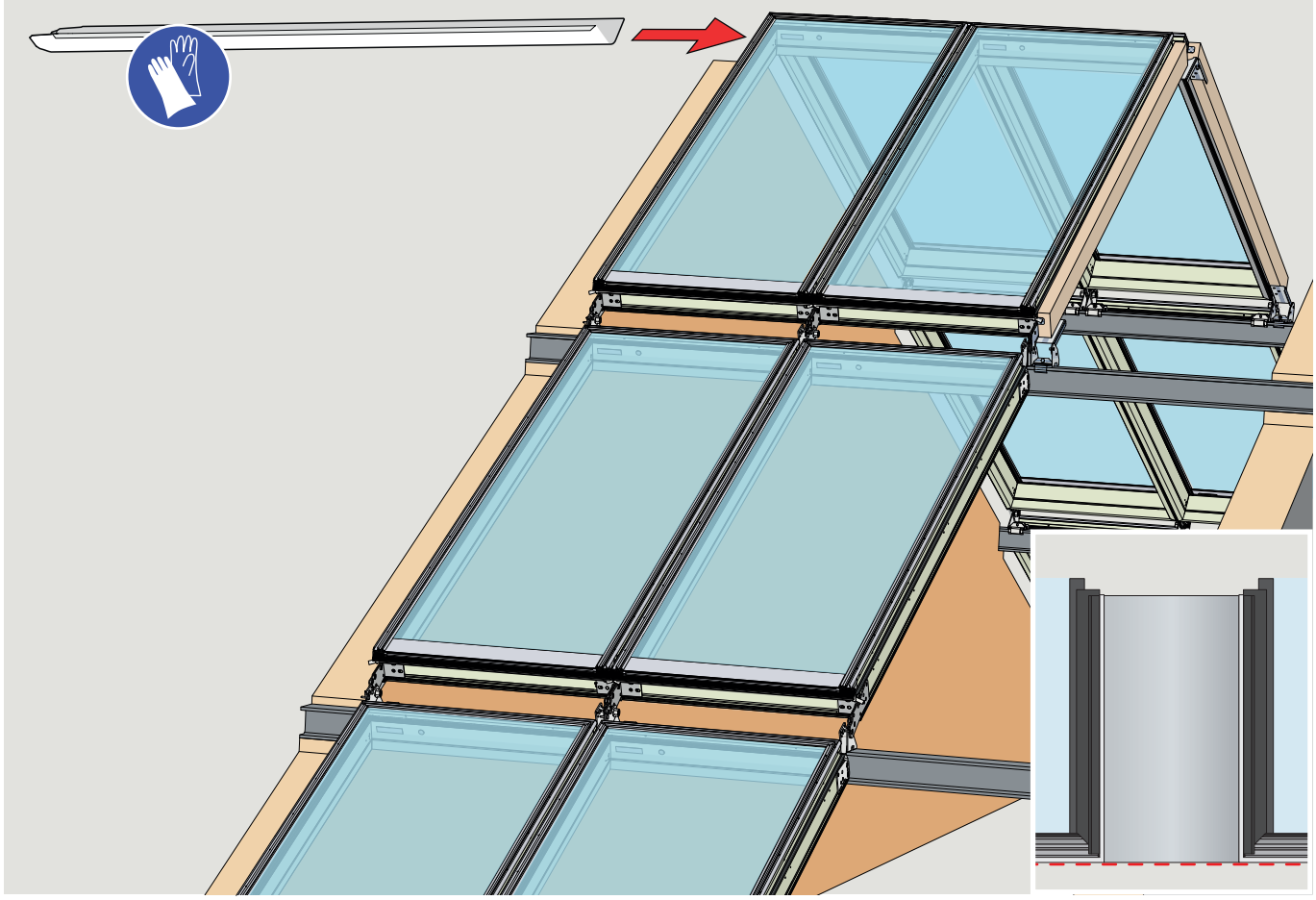

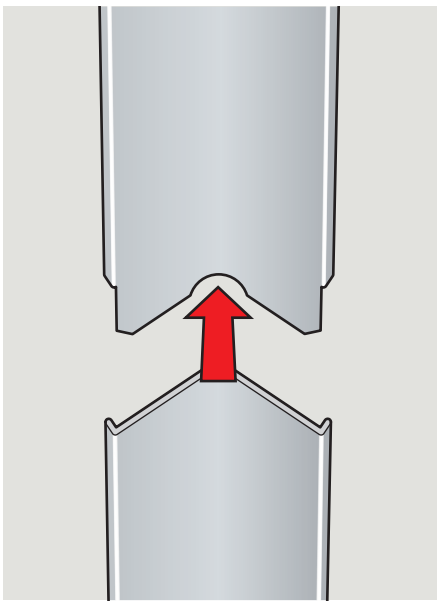

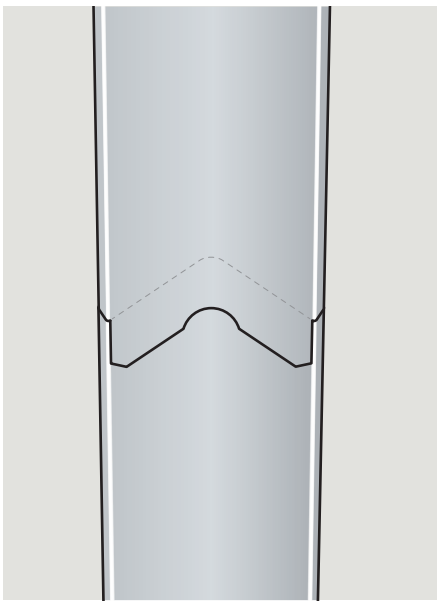

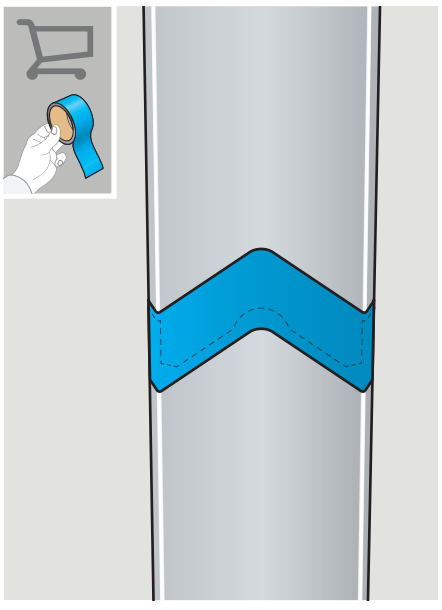

34

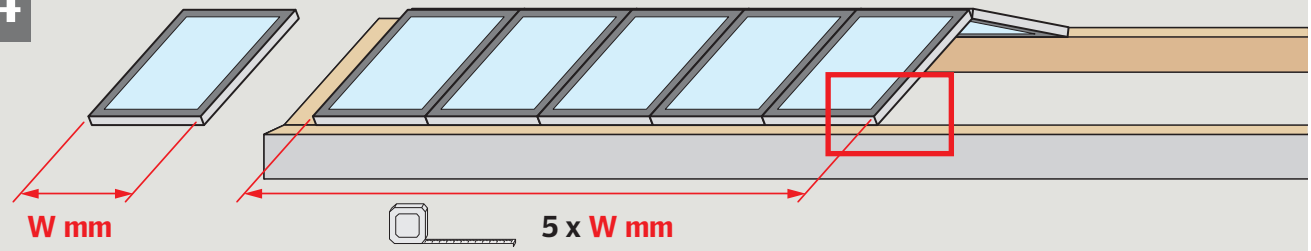

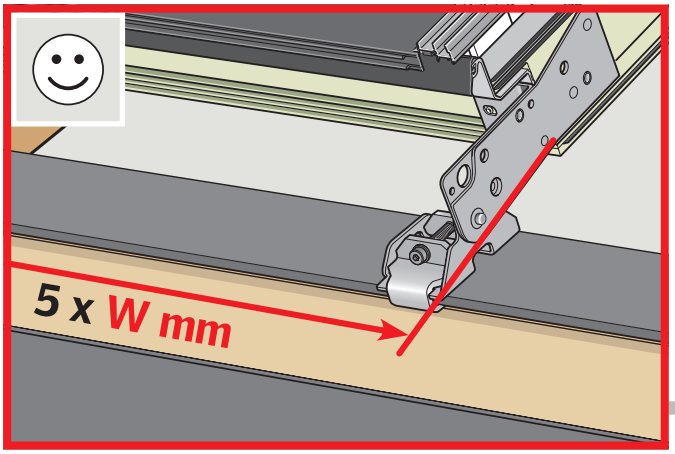

24

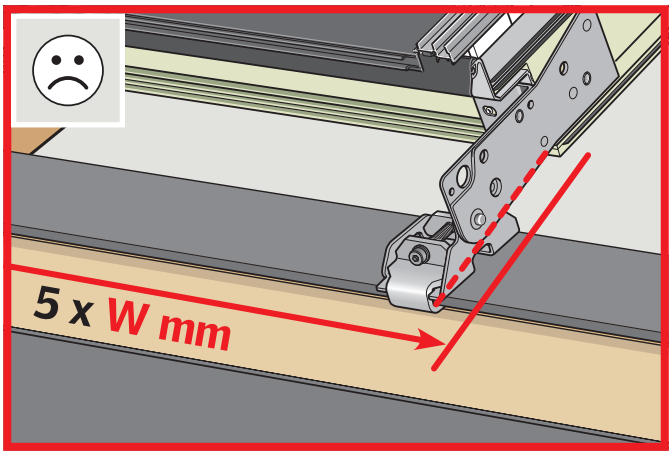

A2-R

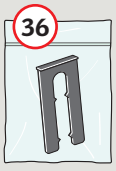

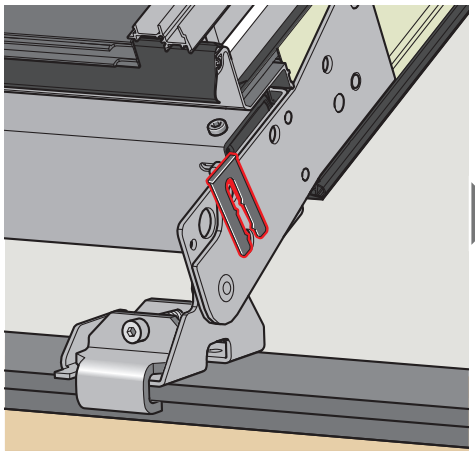

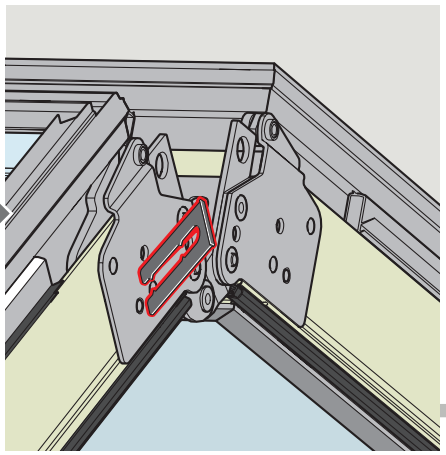

24

25 ▶ 33

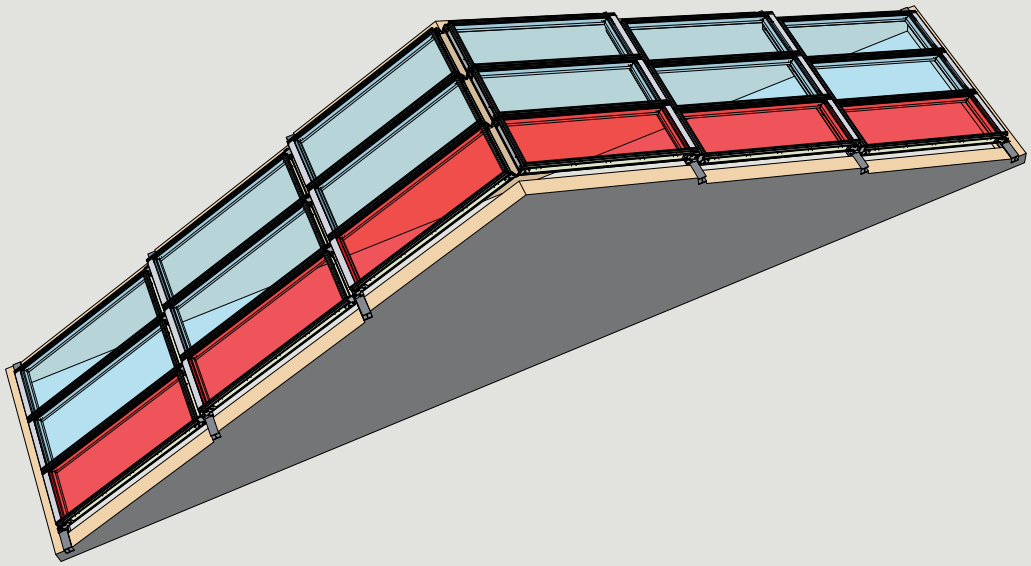

35

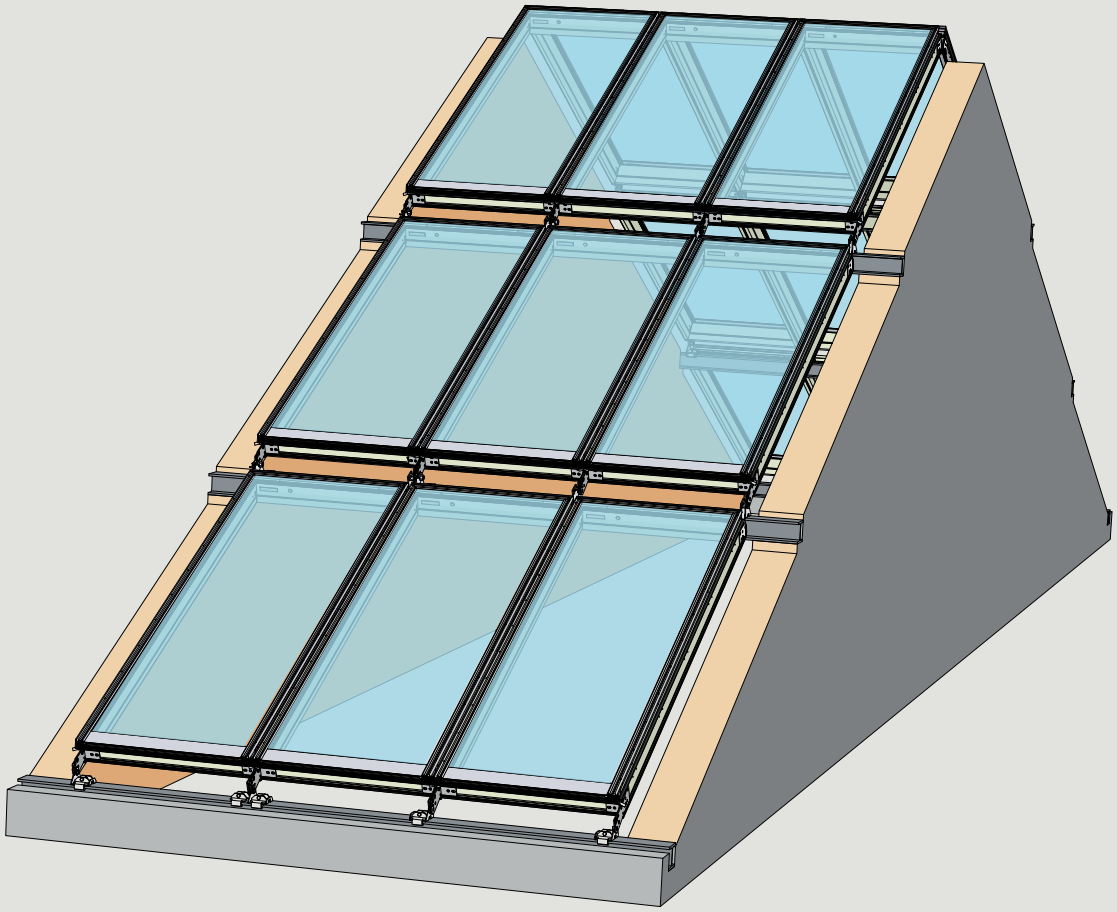

36

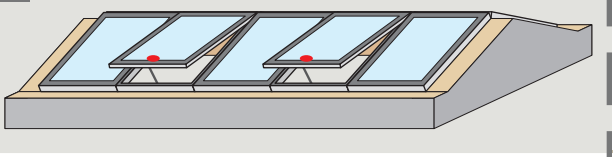

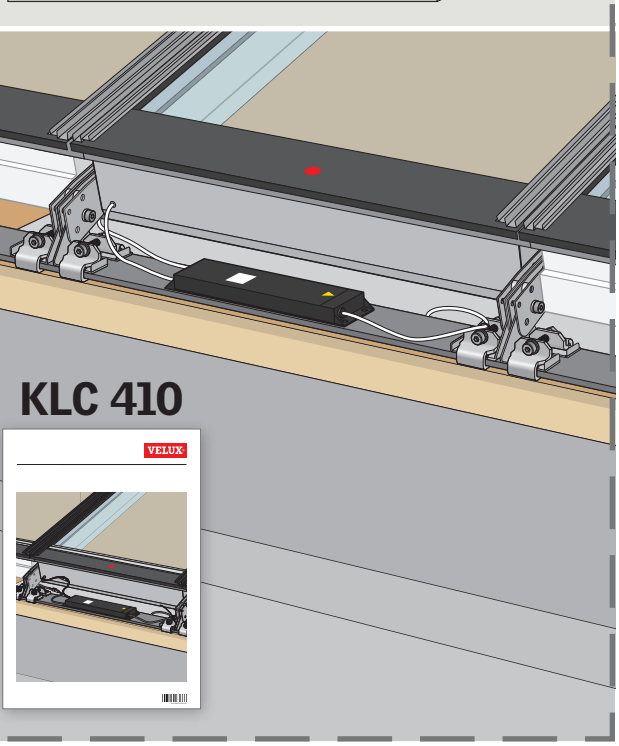
KLC 410
VELUX

BCX

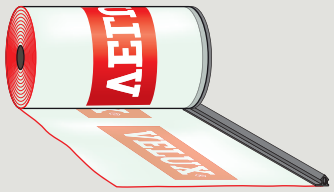
VELUX

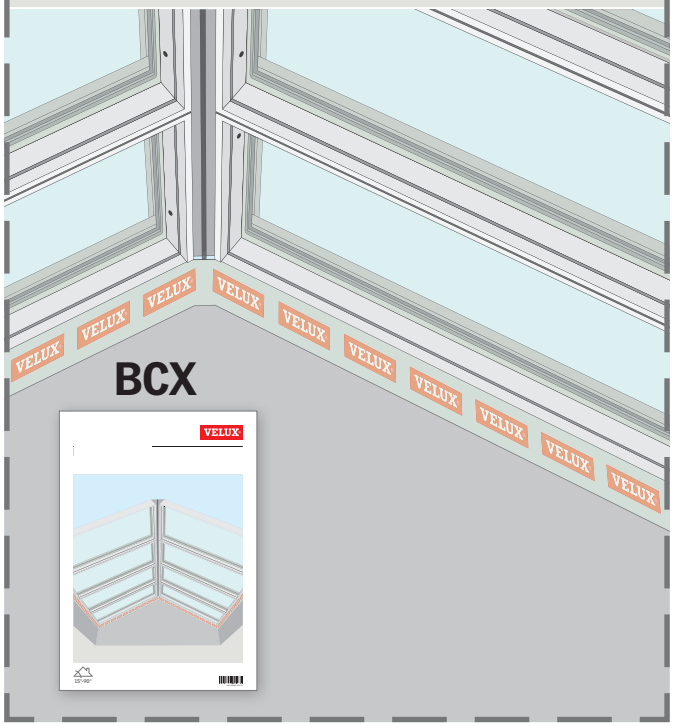
VELUX
VELUX
VELUX
VELUX
VELUX
VELUX
VELUX
VELUX
VELUX
VELUX
BCX
VELUX

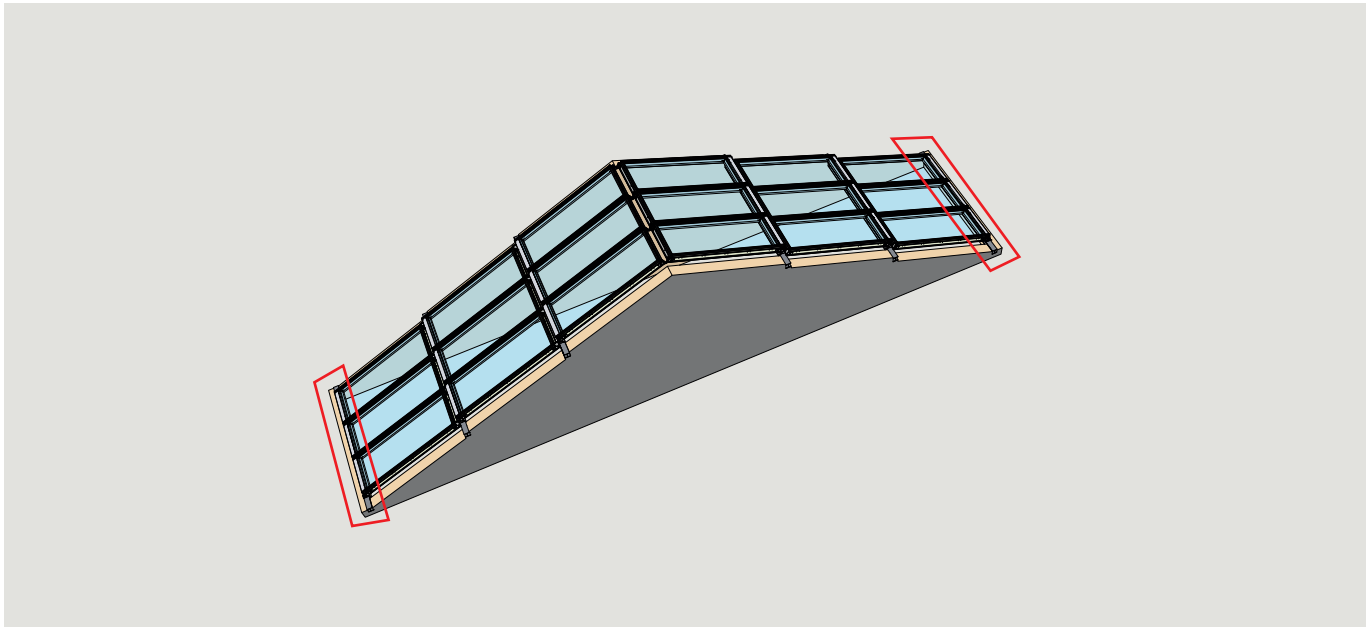

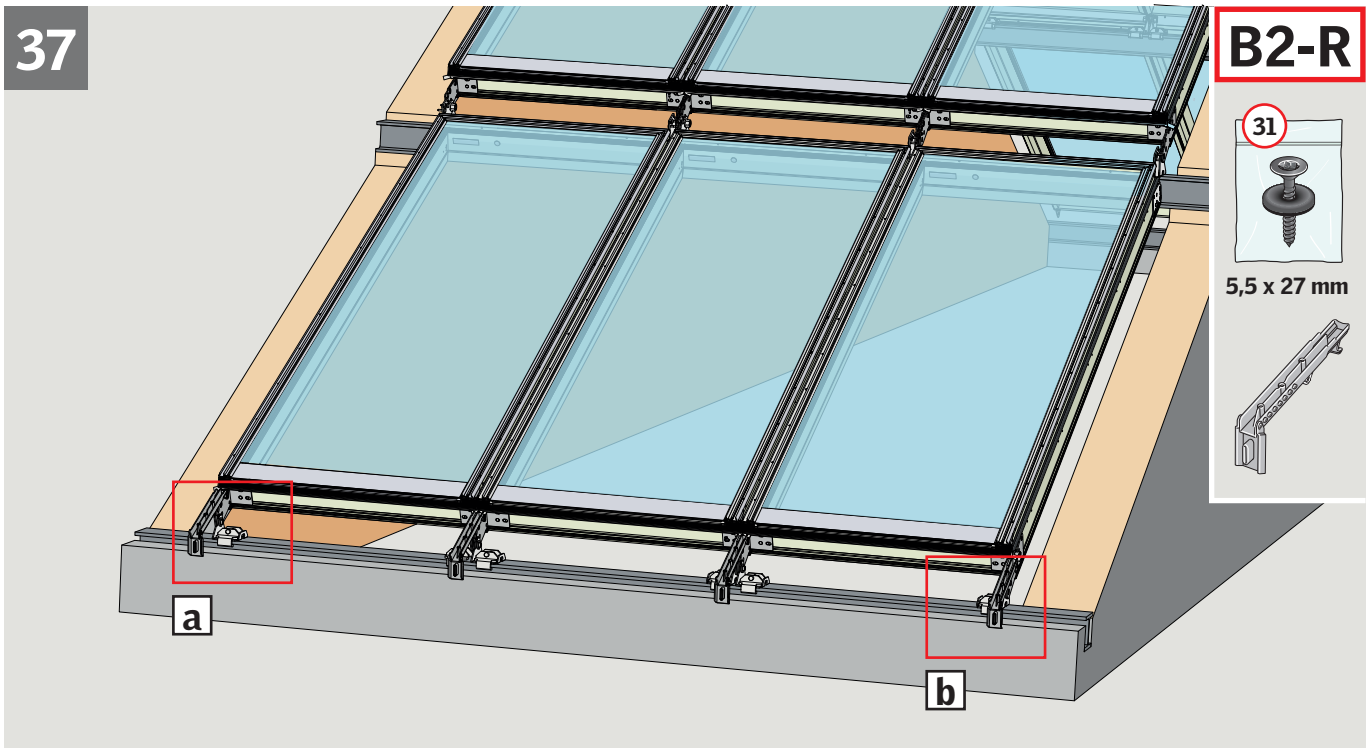
37
B2-R
31
5,5 x 27 mm
a
b

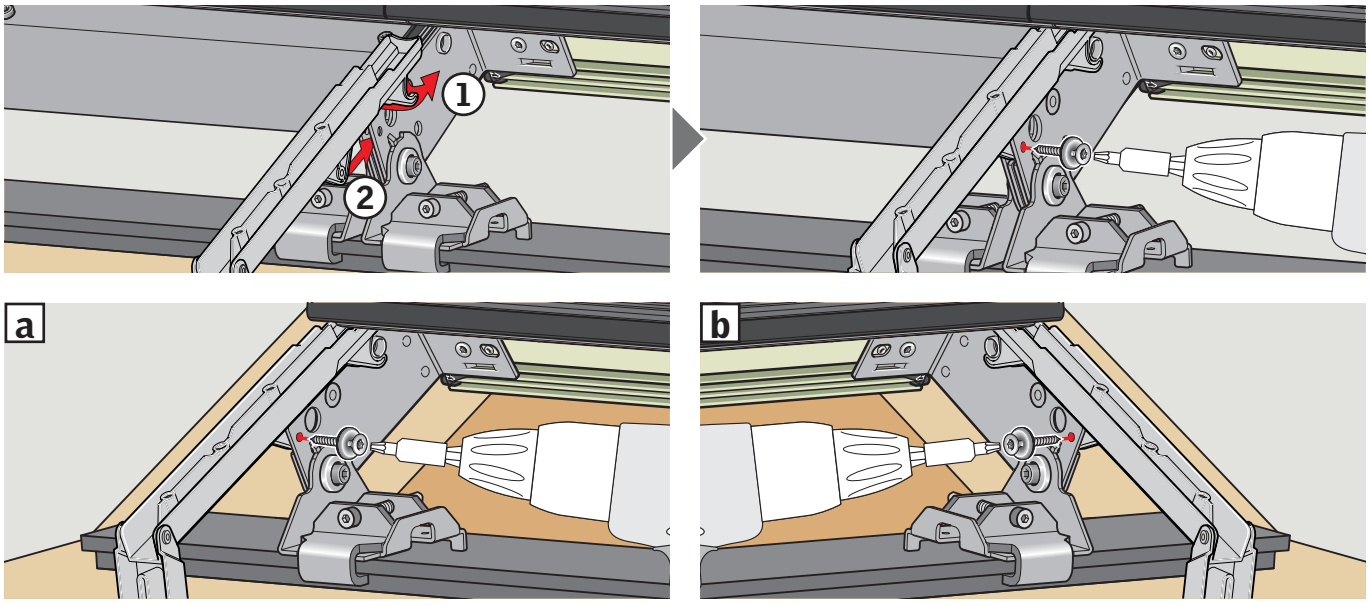
1
2
a
b

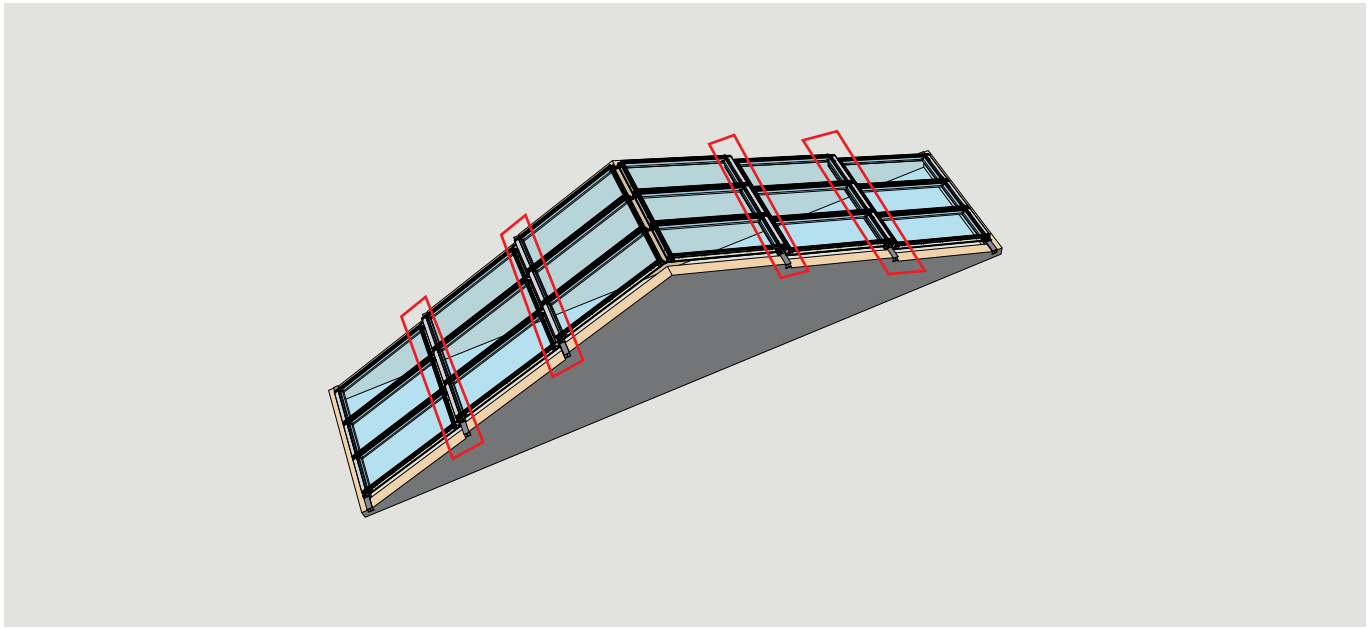

38

B2-S



5,5 x 27 mm

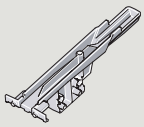

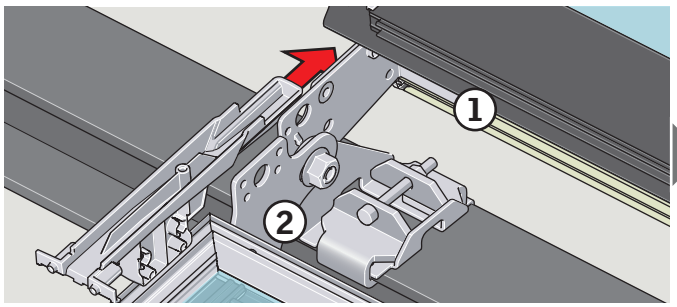

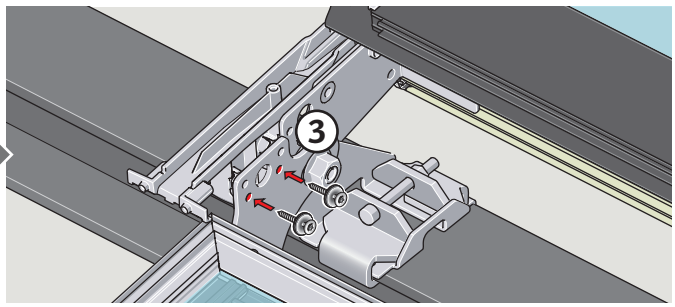

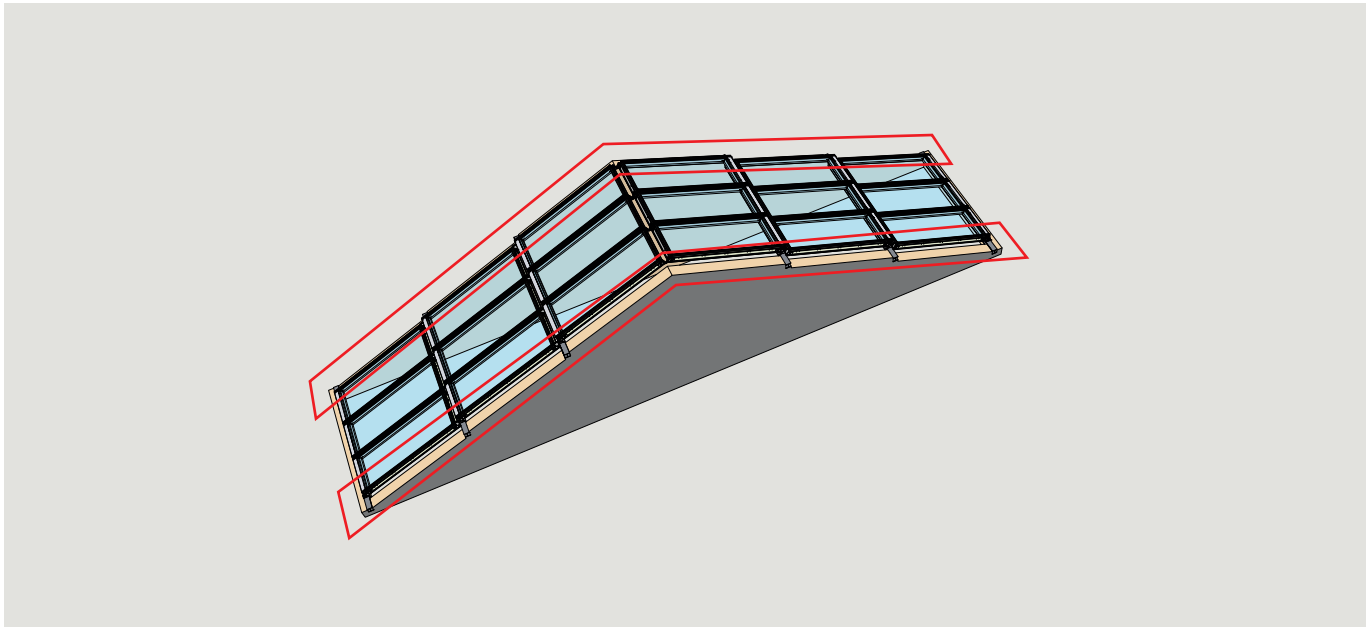

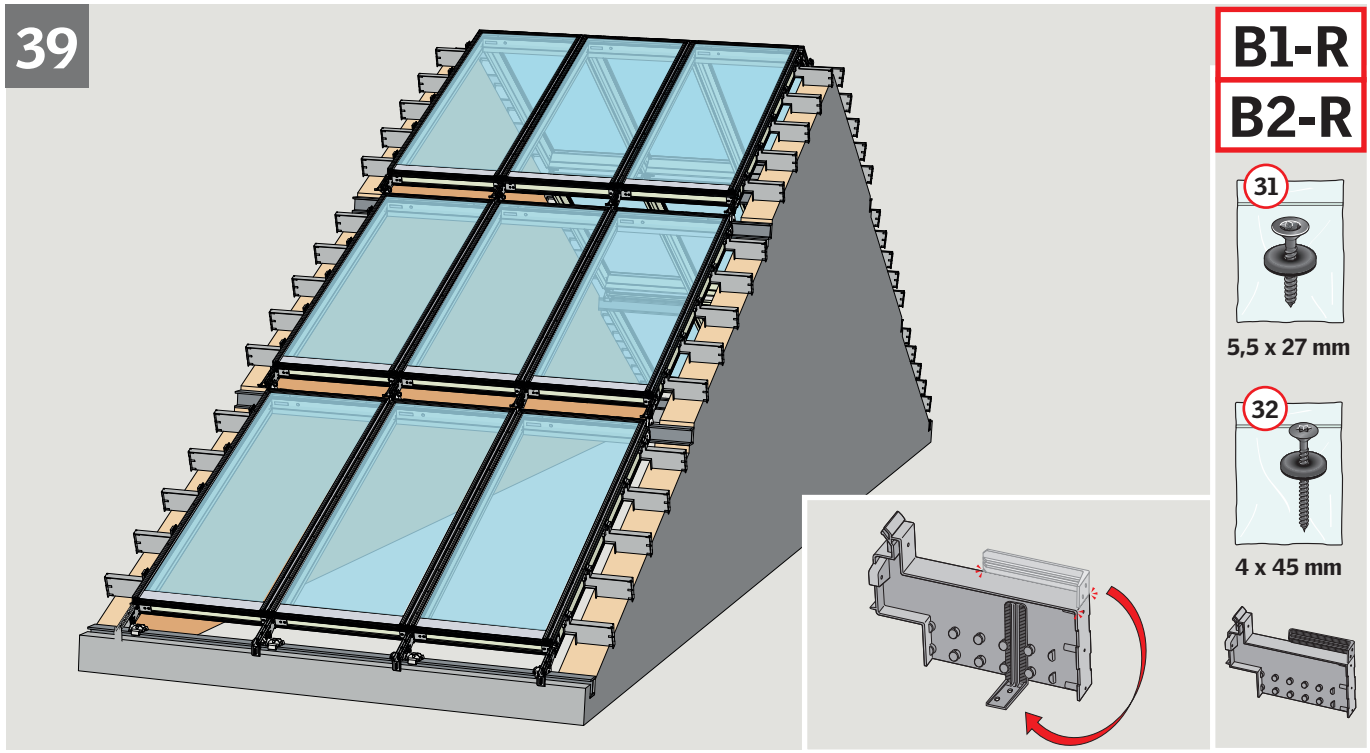
39
B1-R
B2-R
31
5,5 x 27 mm
32
4 x 45 mm

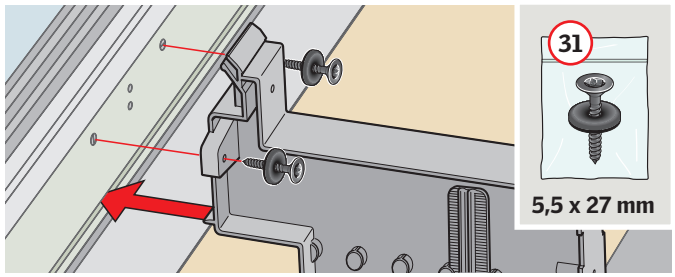
31
5,5 x 27 mm

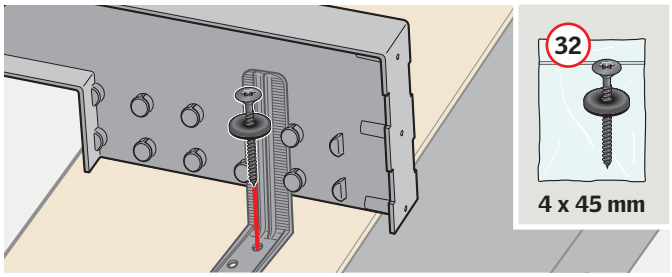
32
4 x 45 mm

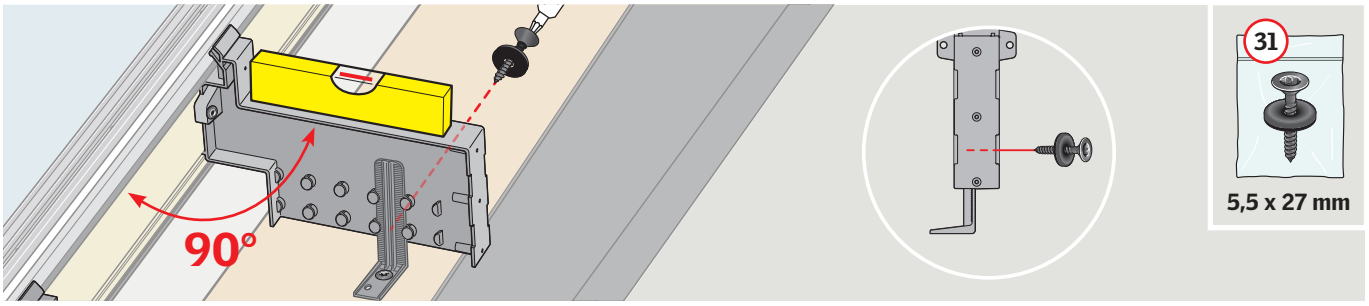
90°
31
5,5 x 27 mm

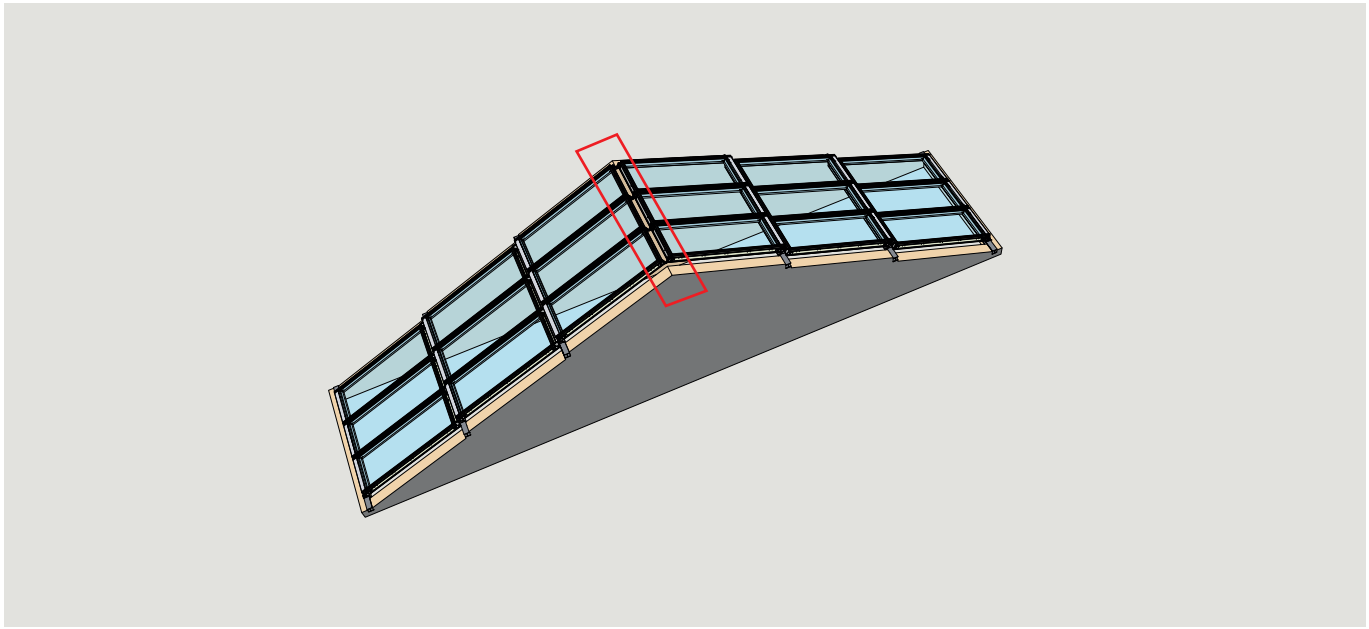

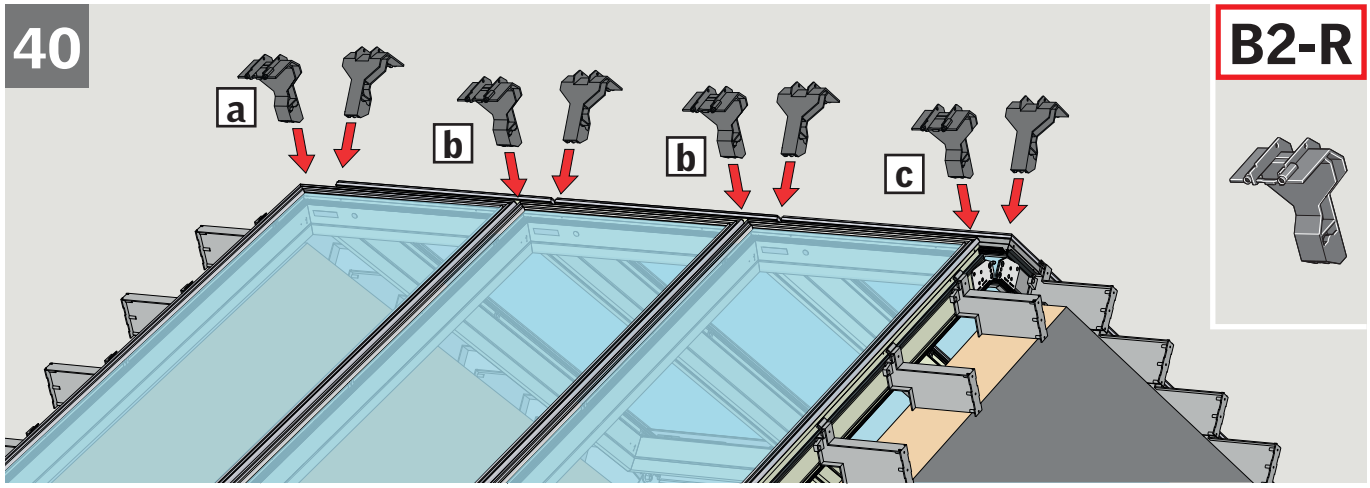
40
a
b
b
c
B2-R

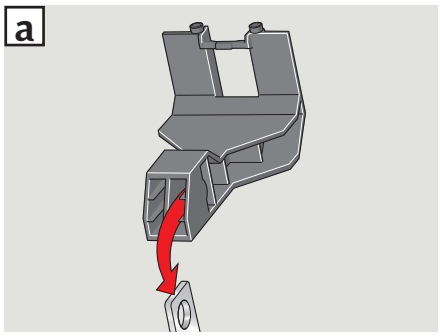
a

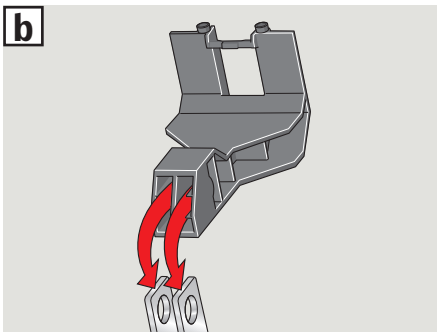
b

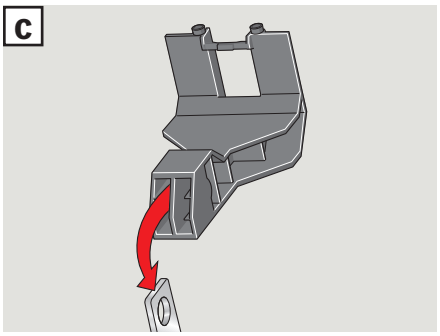
c

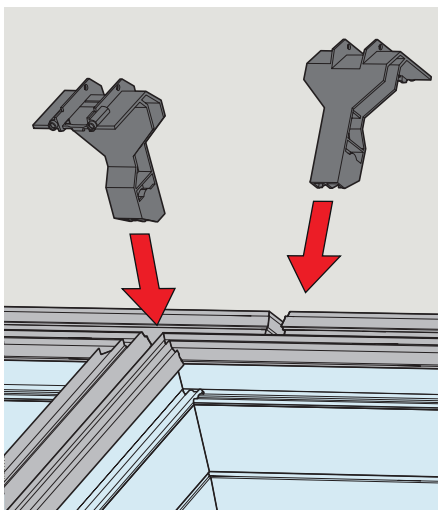

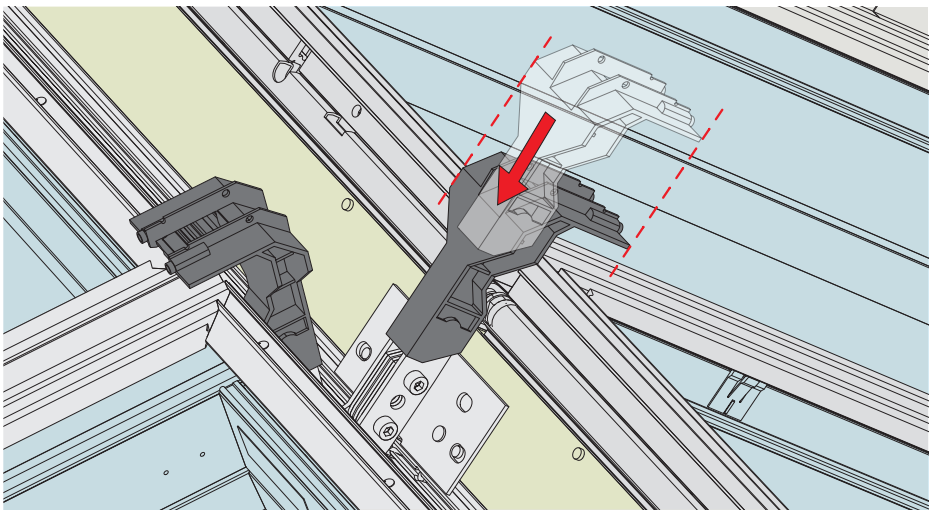

41

B1-R

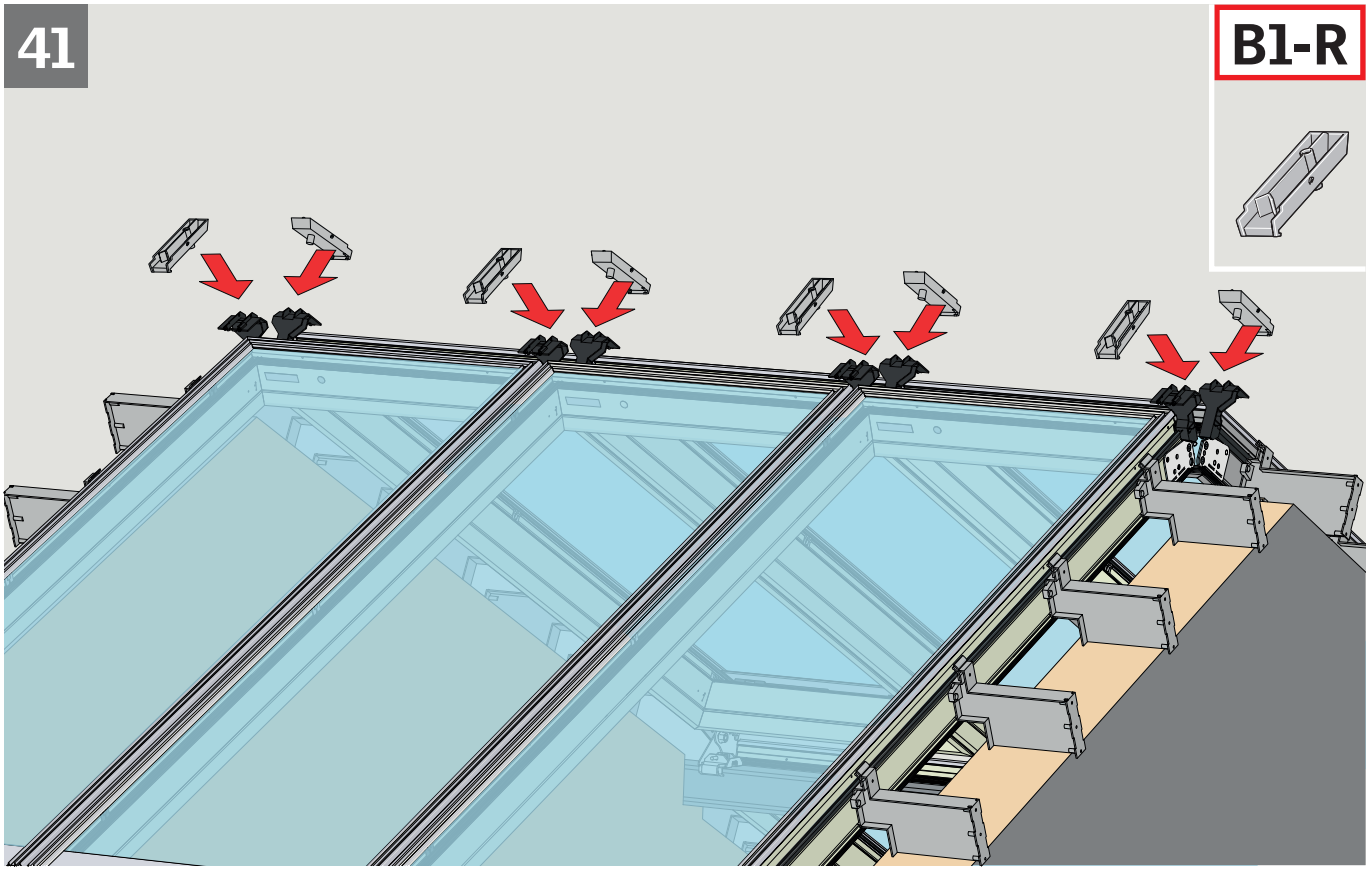

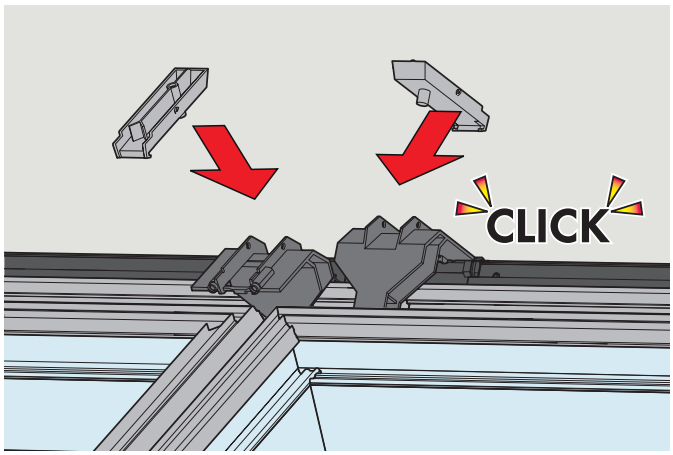

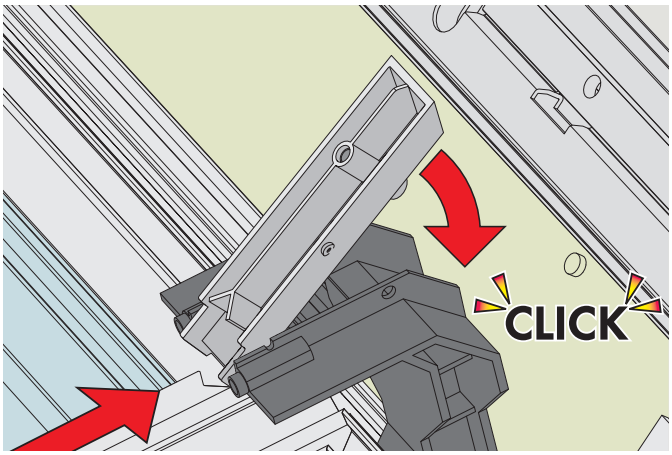

42

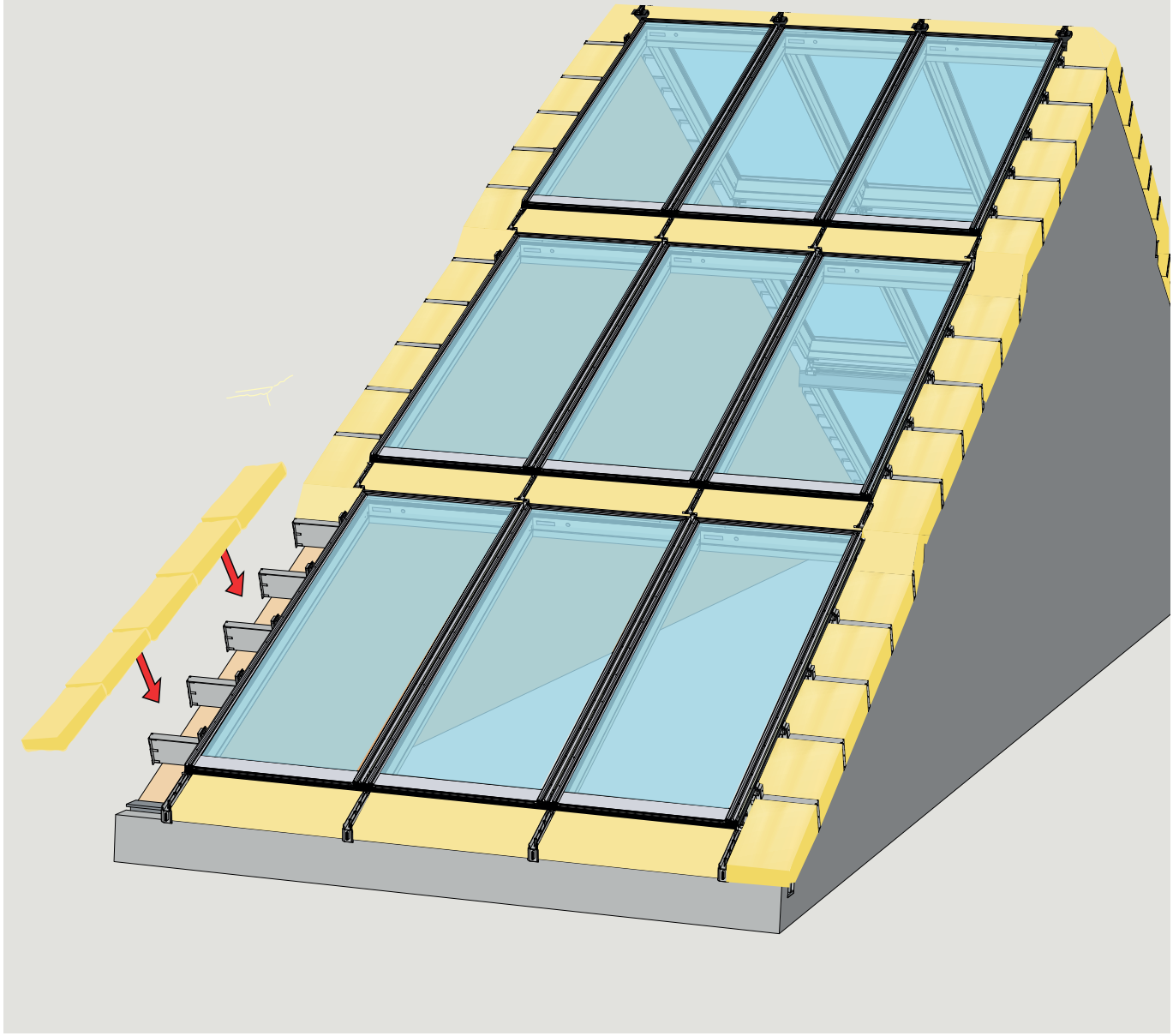

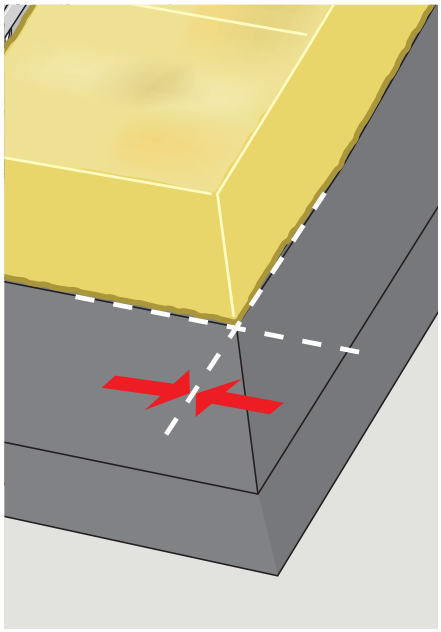

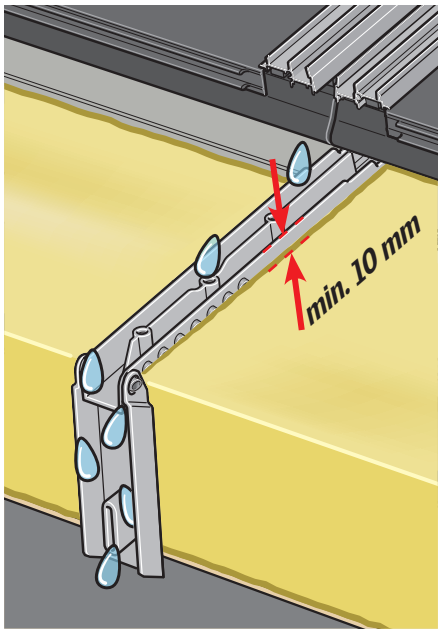

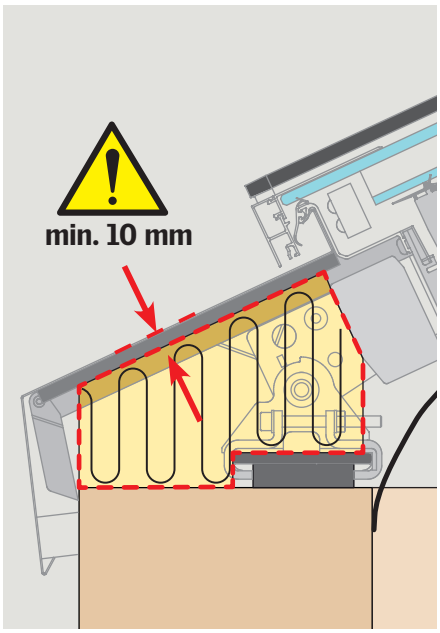

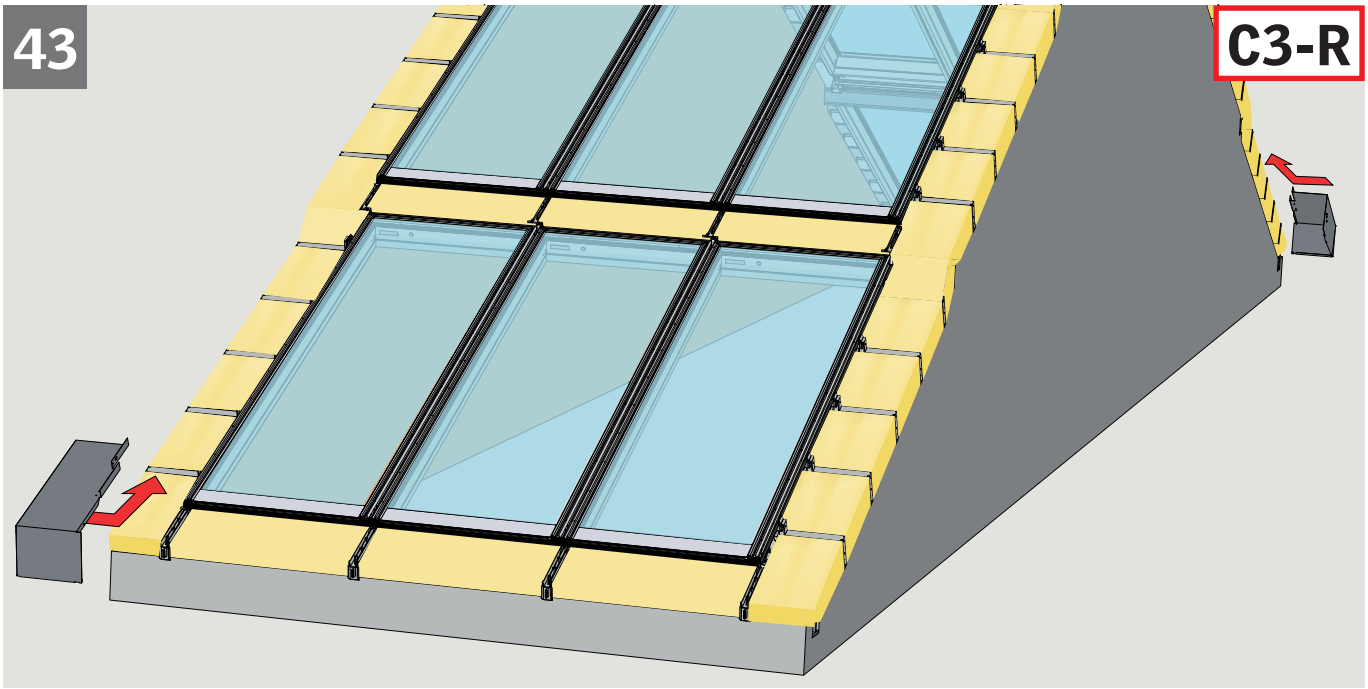
43
C3-R

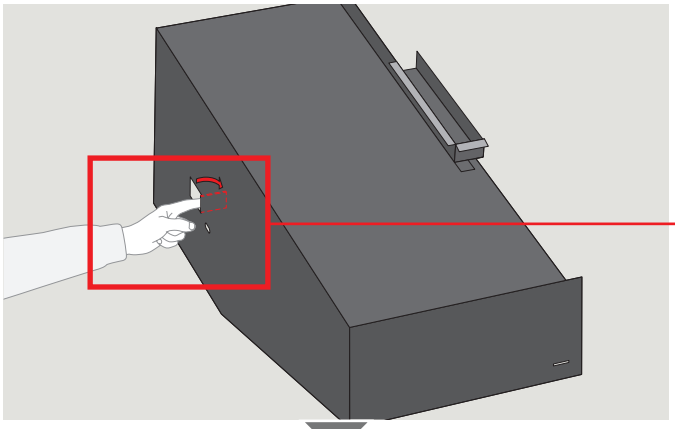

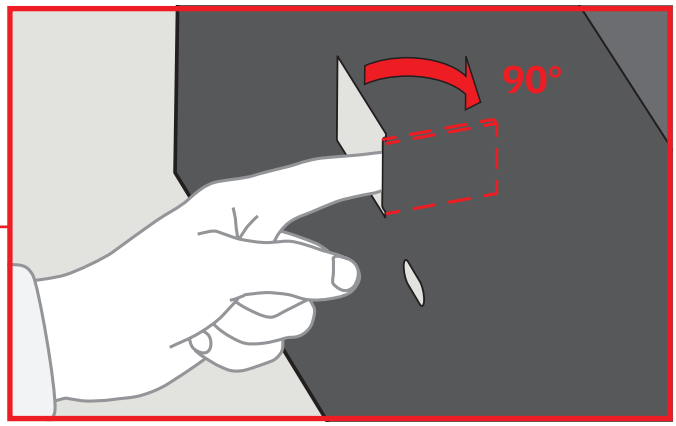
90°

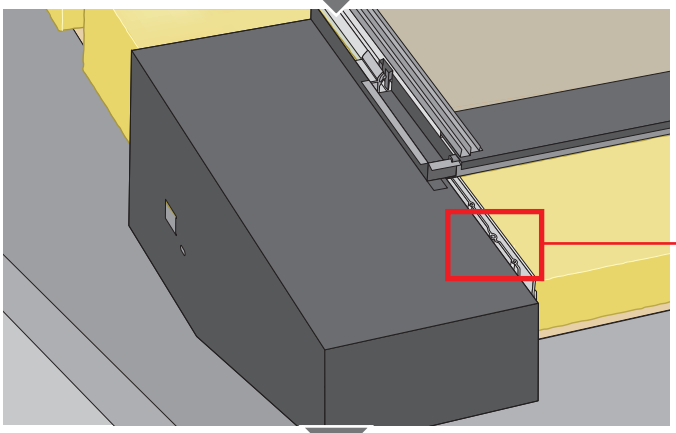

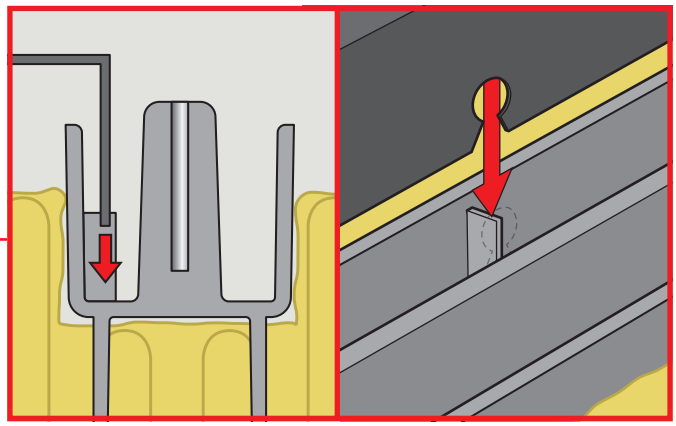

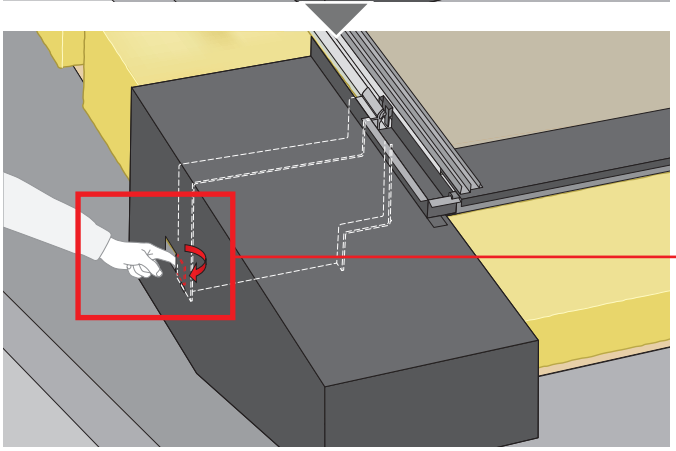

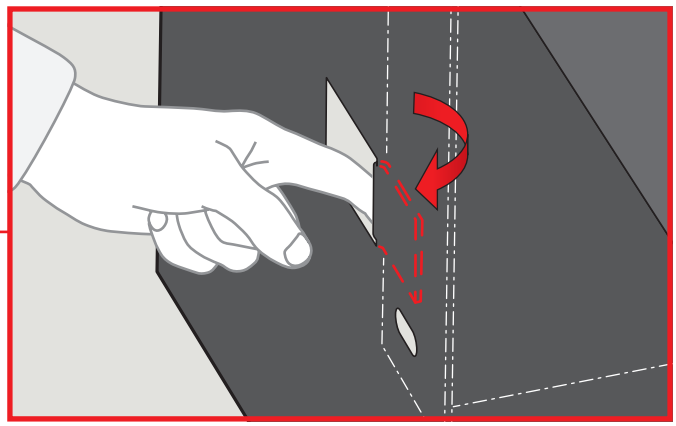

44

C1-R B1-R

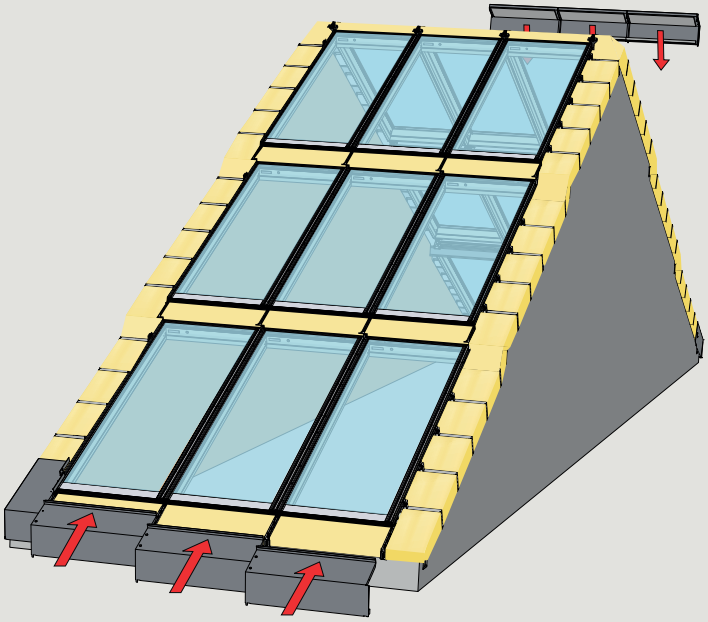

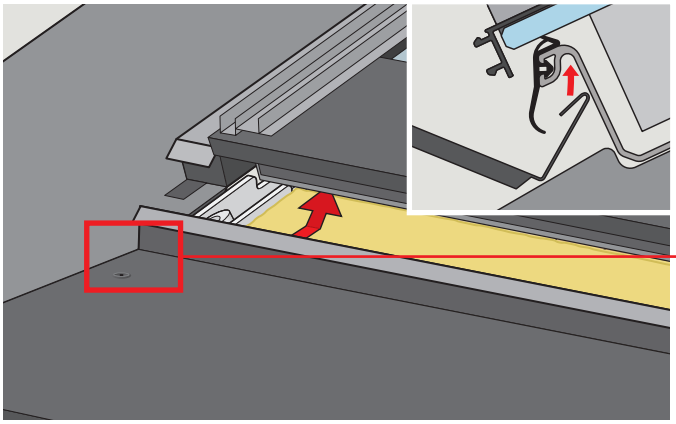

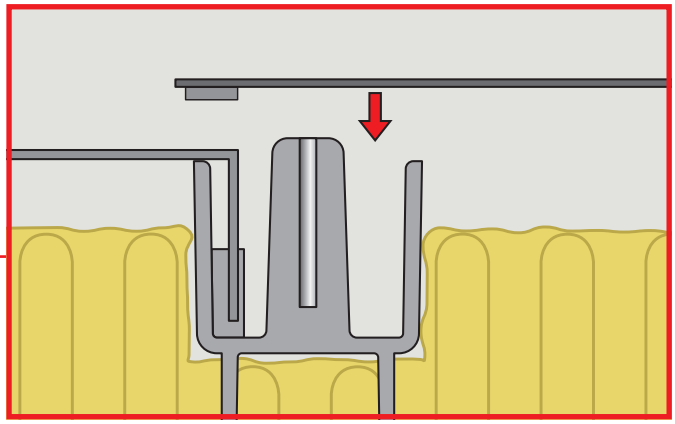

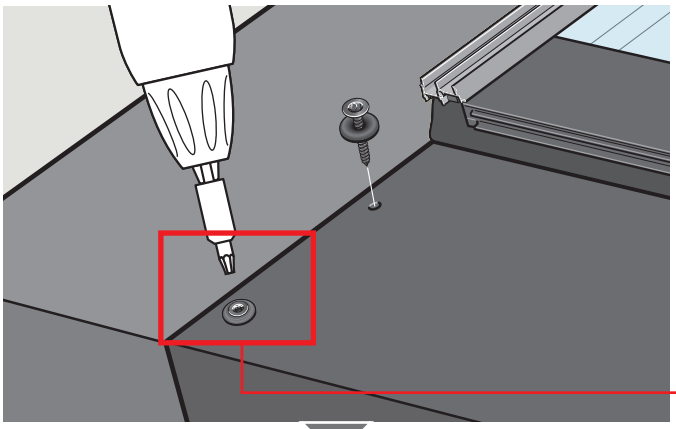

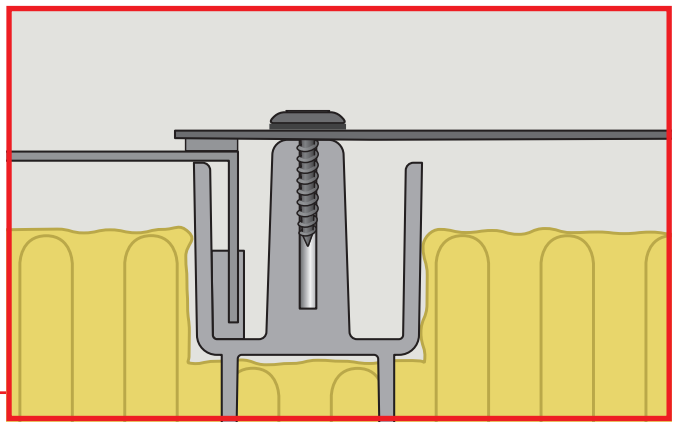

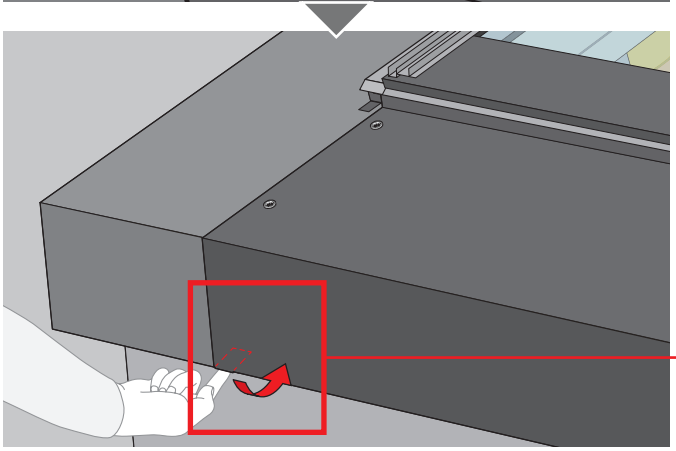

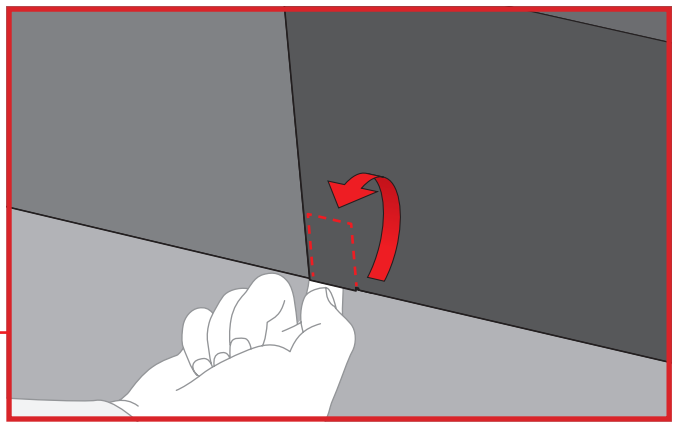



5,5 x 27 mm

45

C3-R B2-R

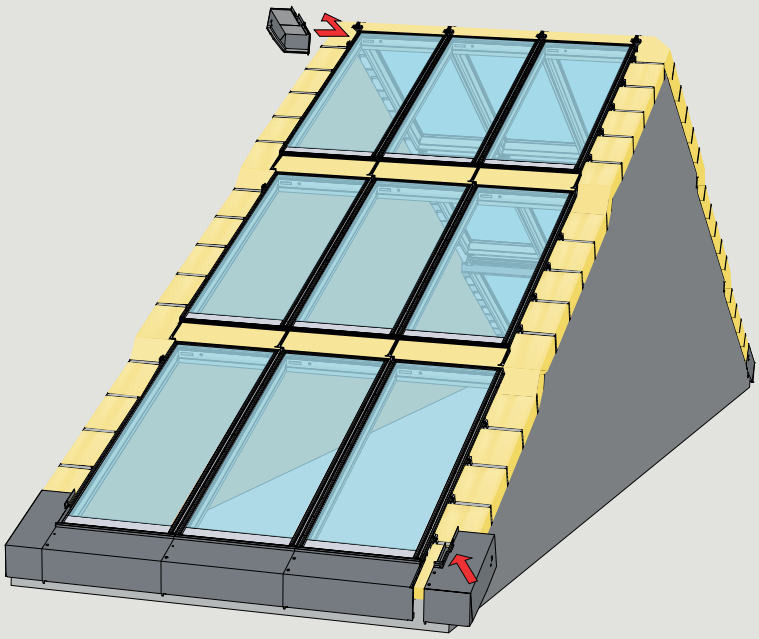

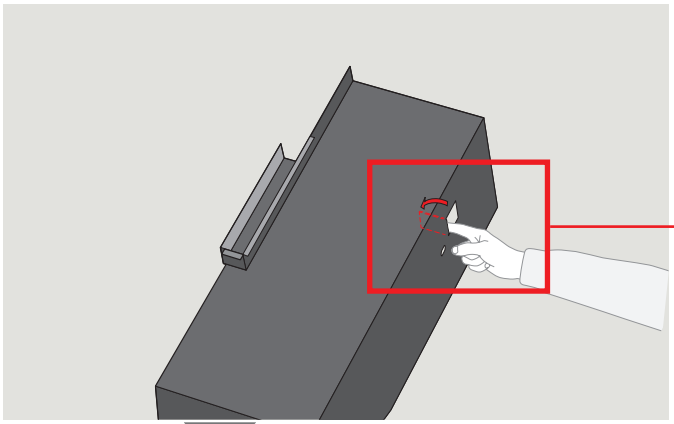

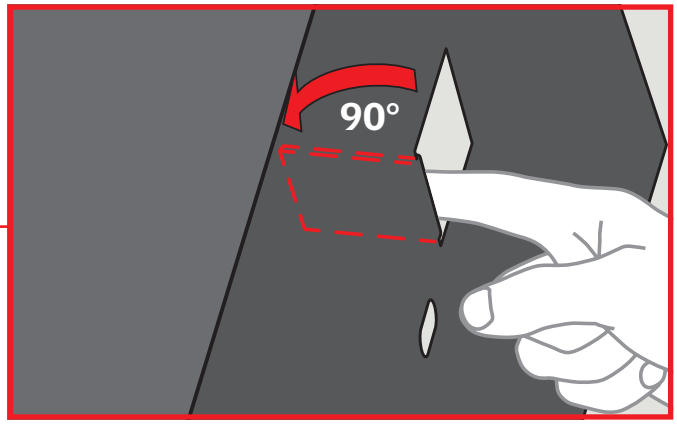

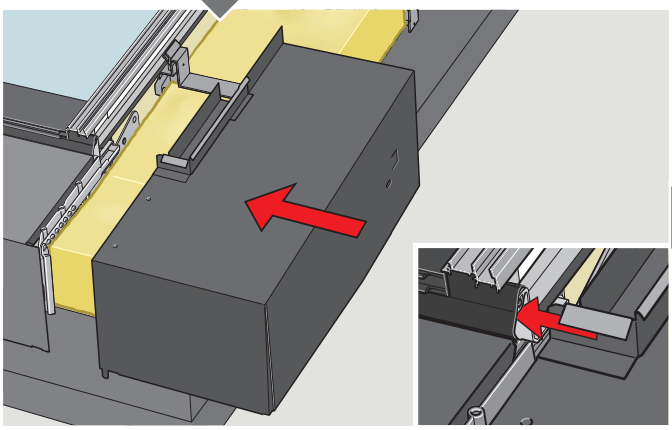

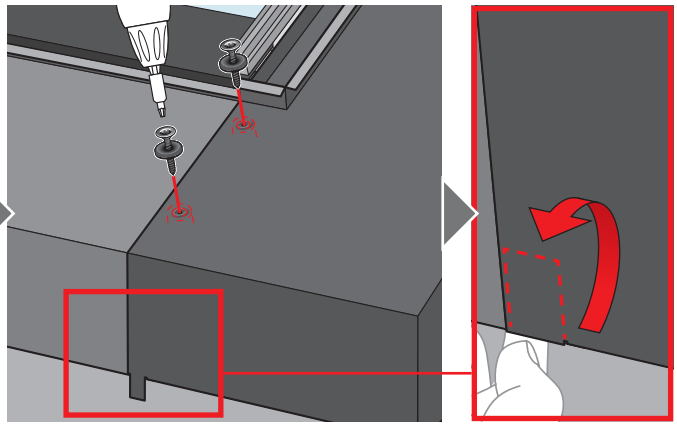

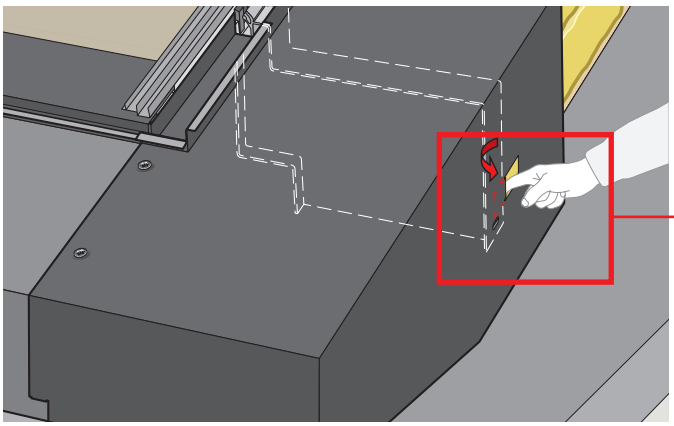

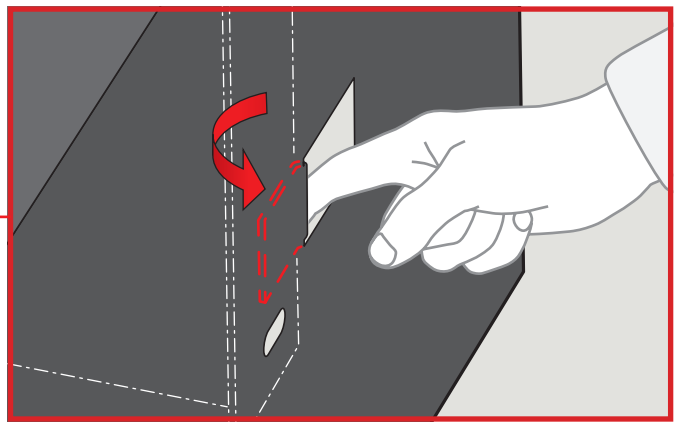

46

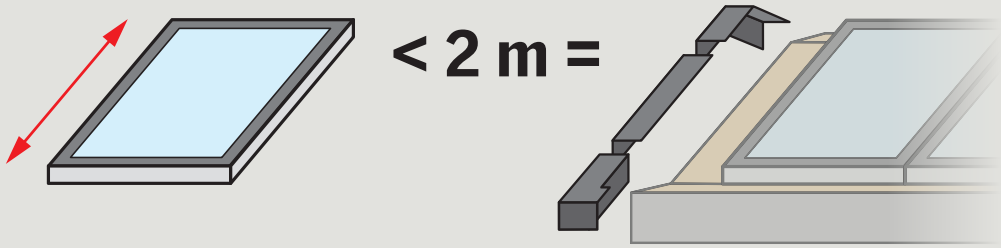

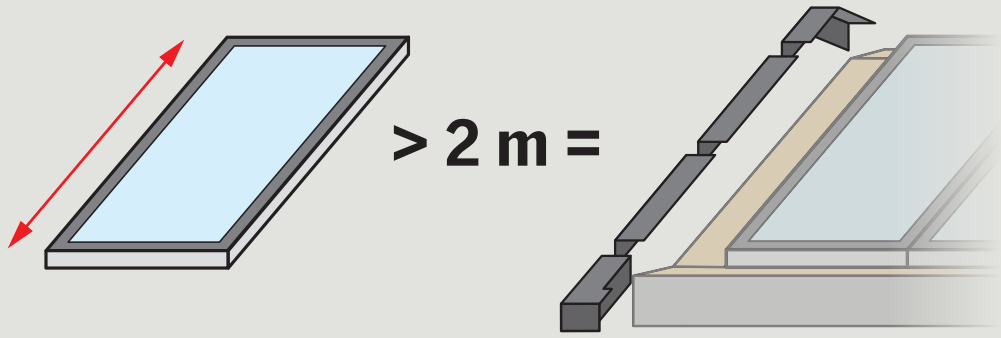

47

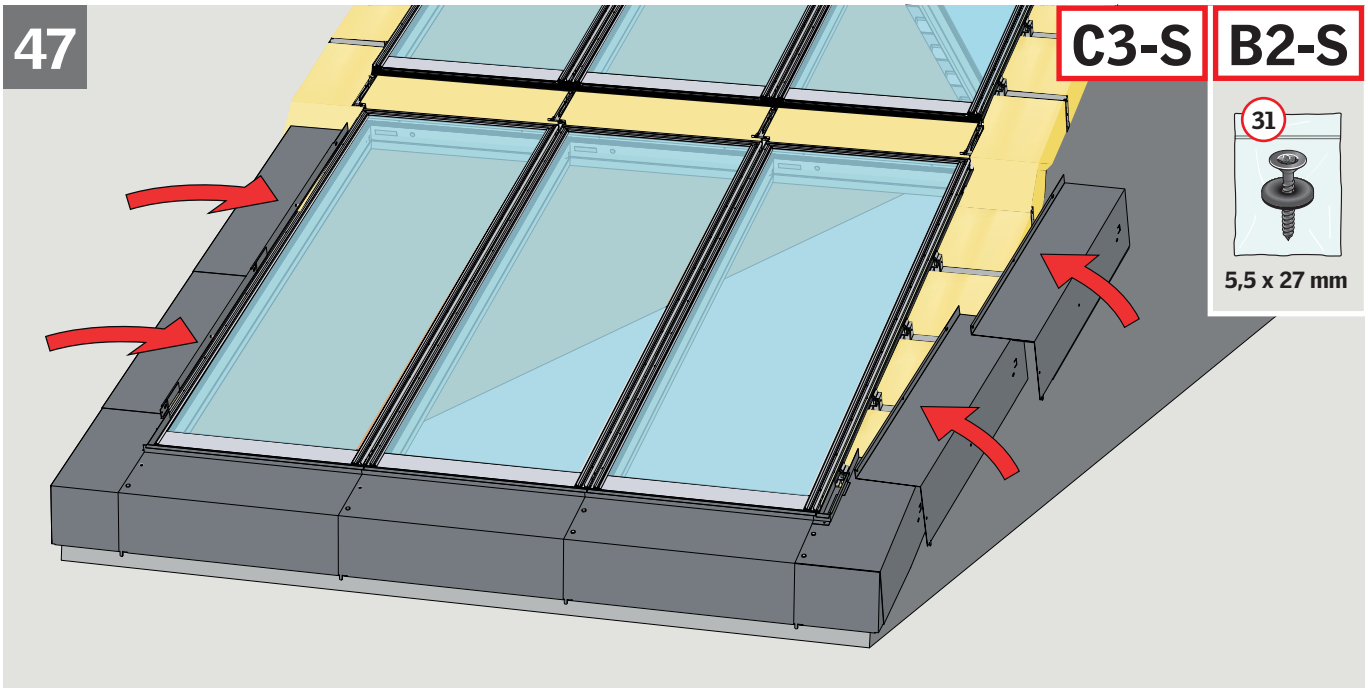

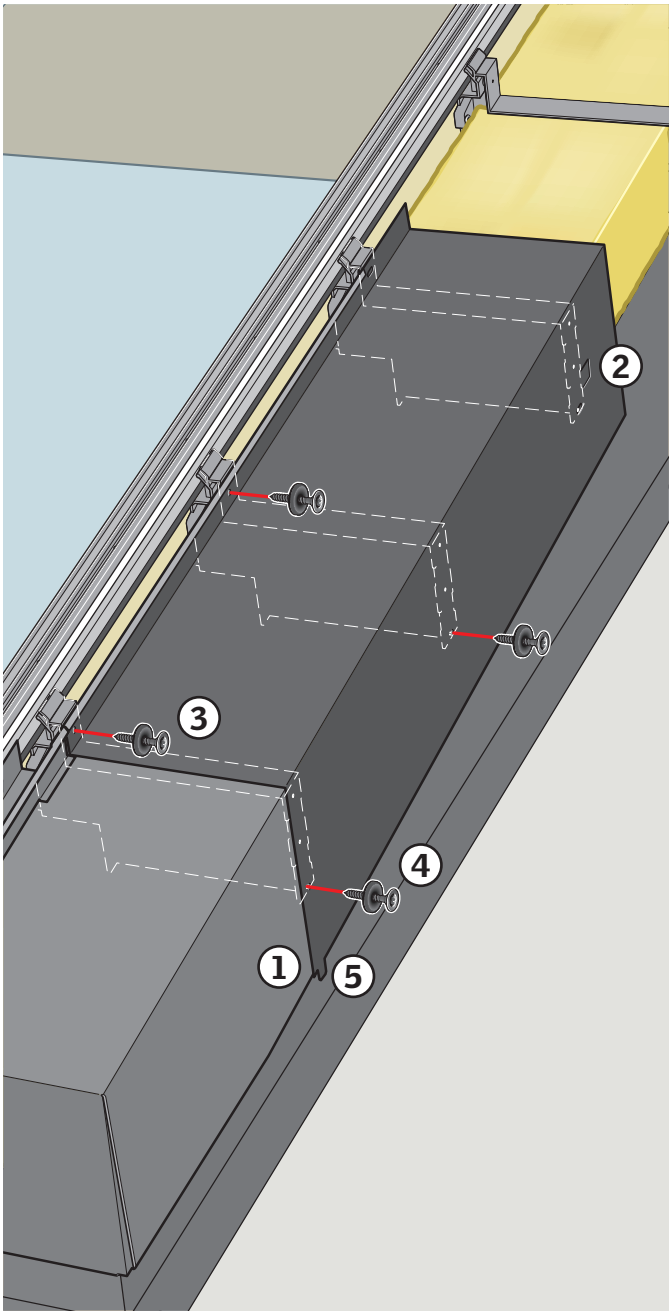

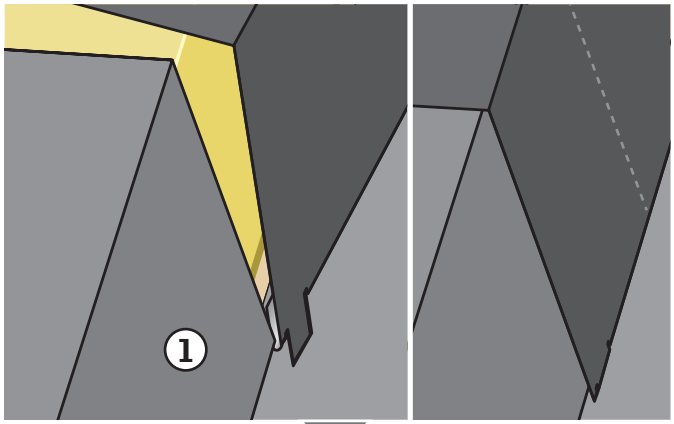

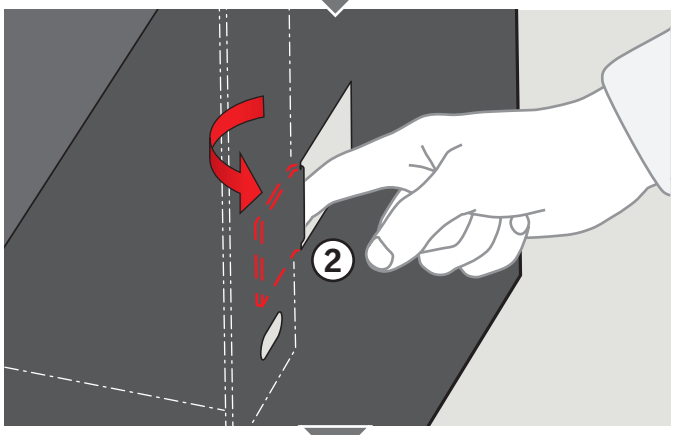

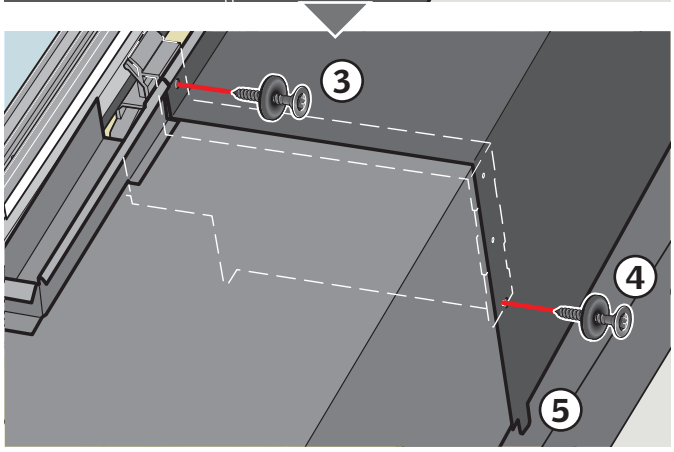

48

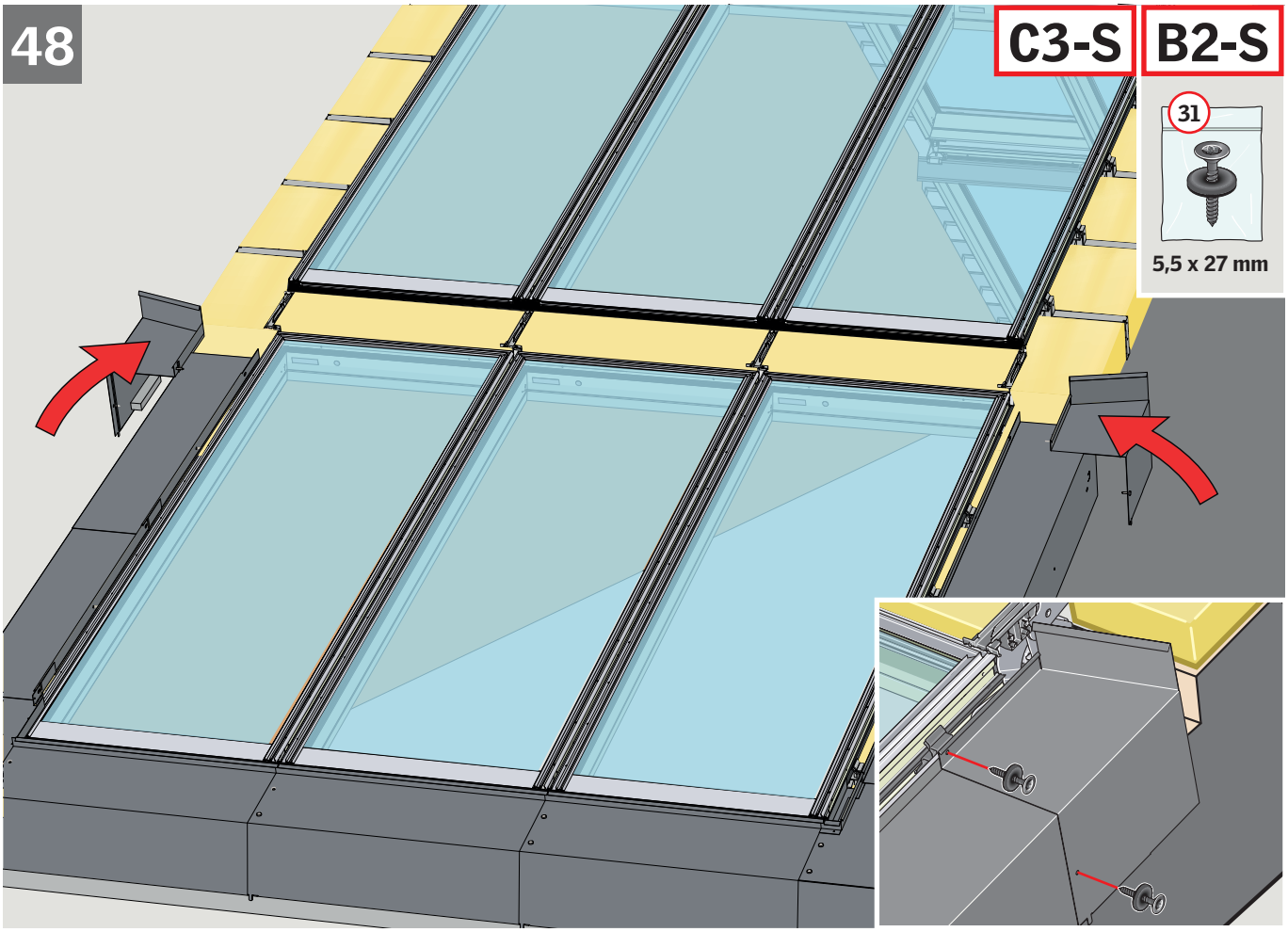

49

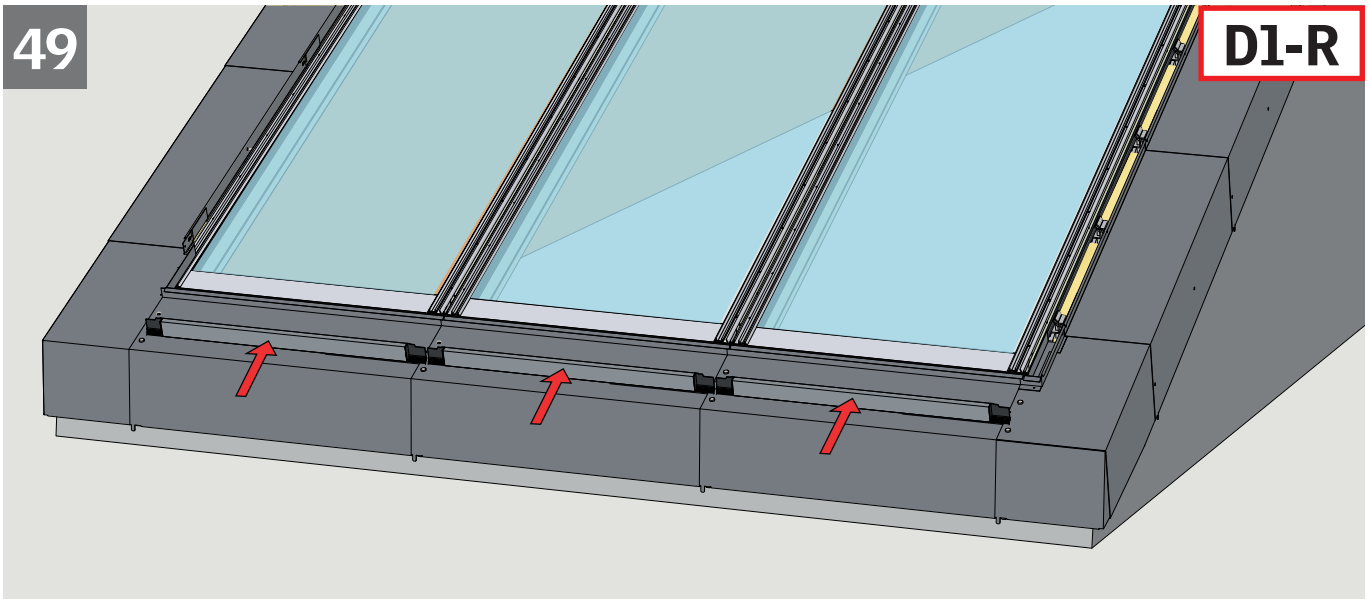

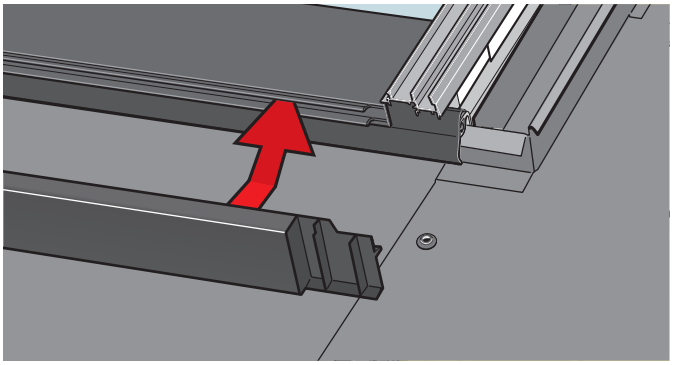

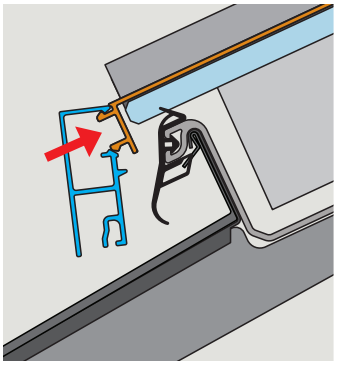

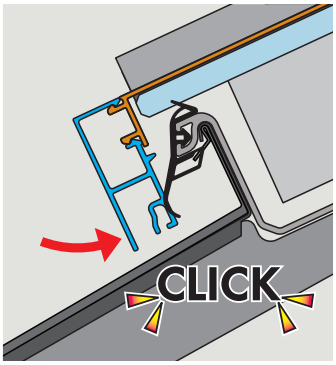

50

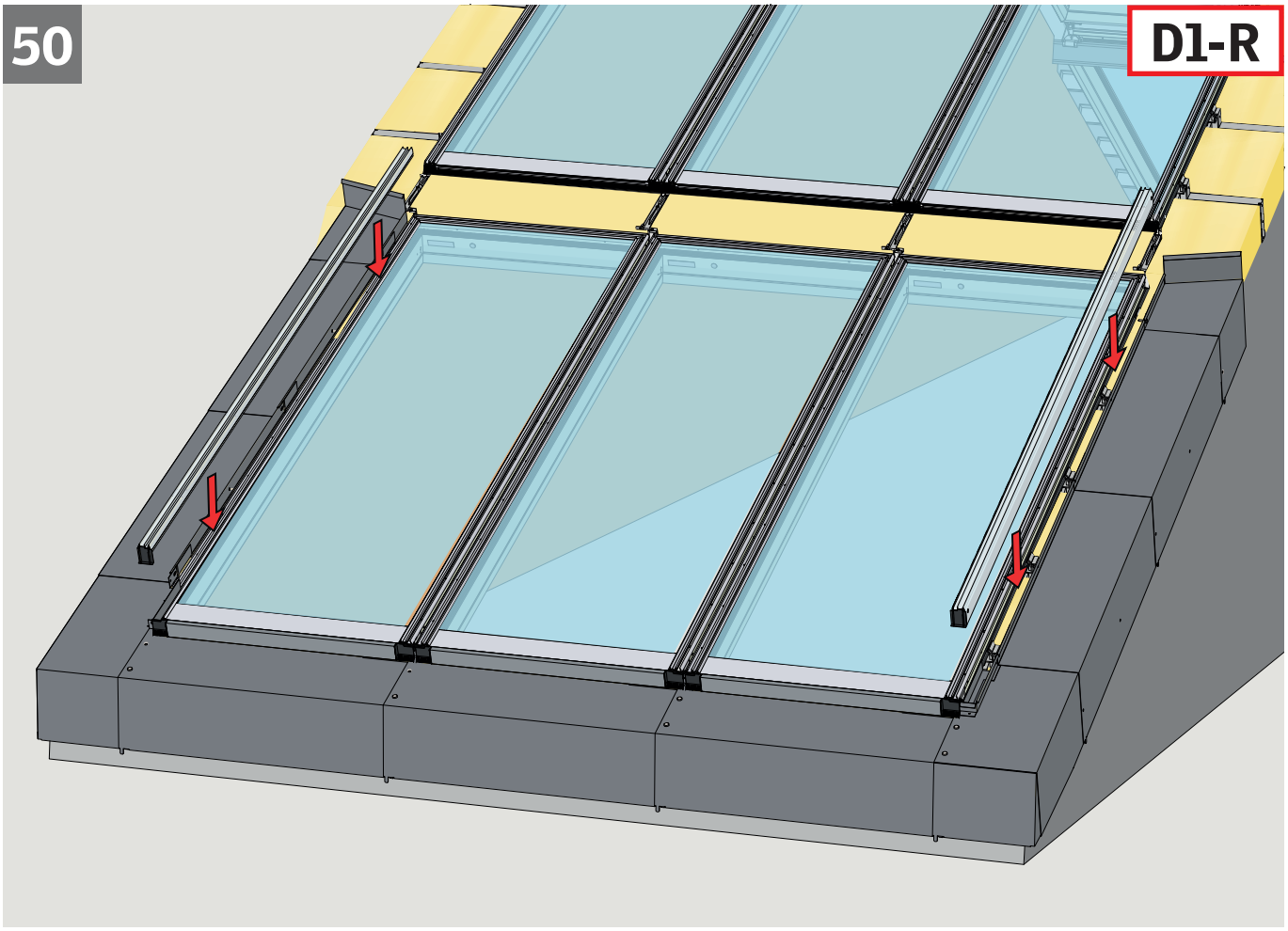

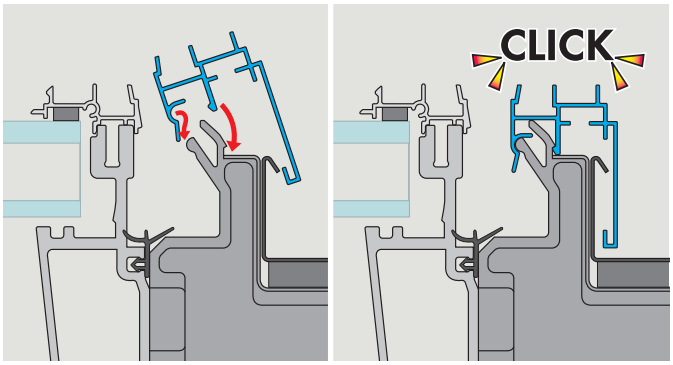

51

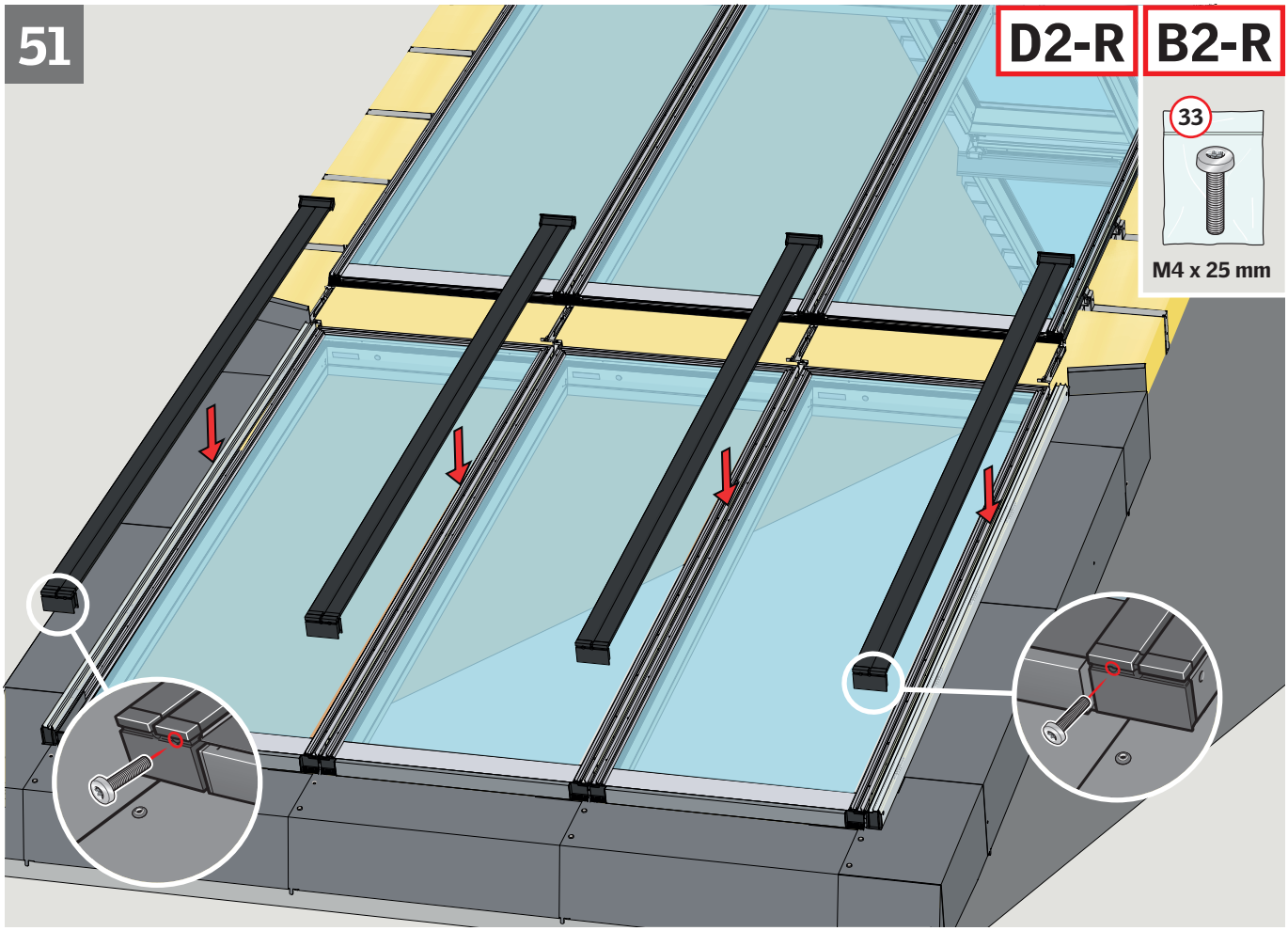

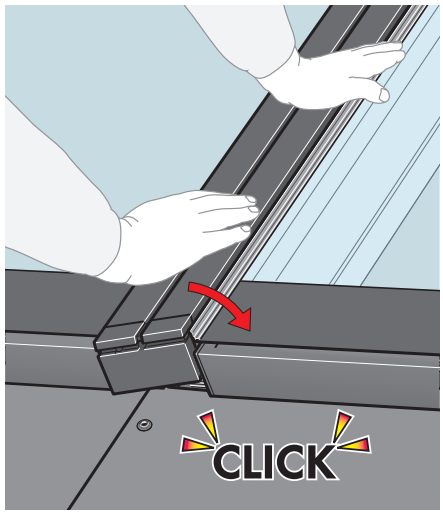

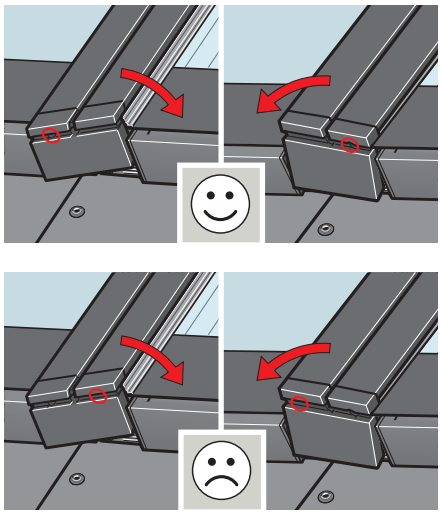

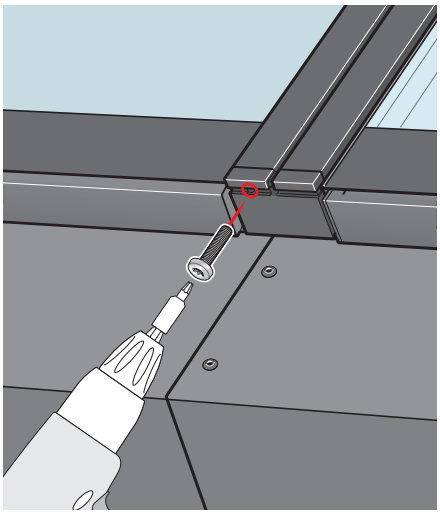

52

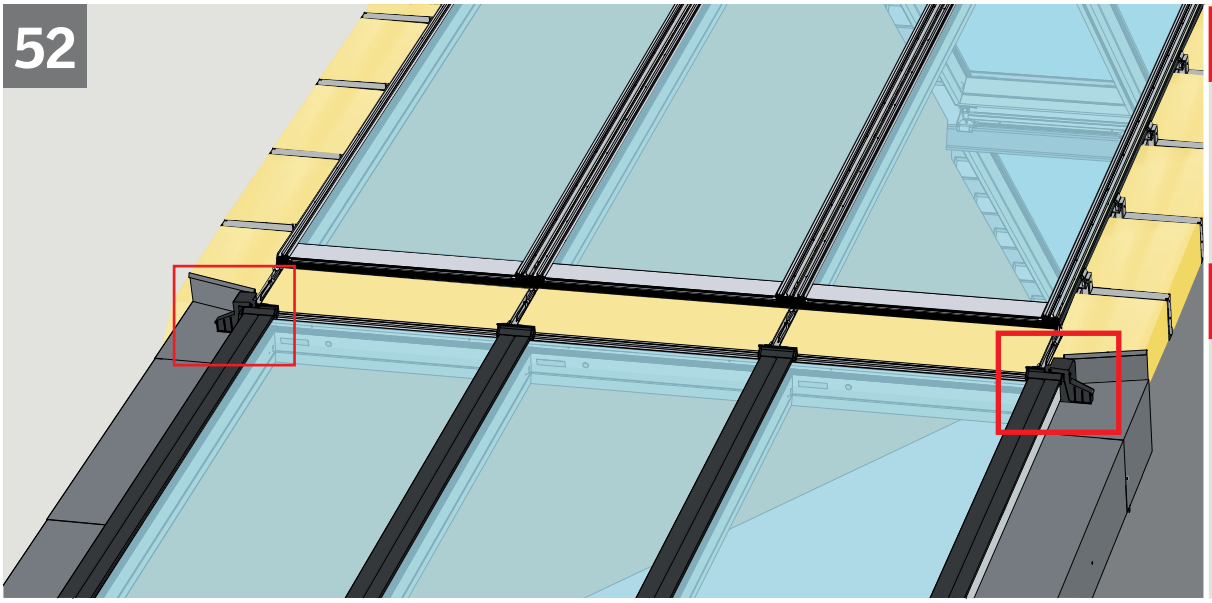

D4-S



B2-S



5,5 x 27 mm

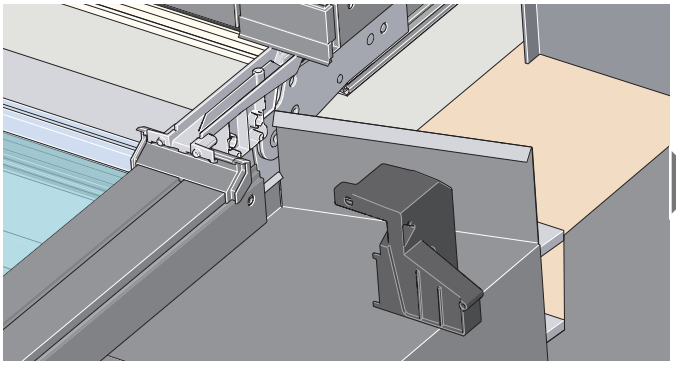

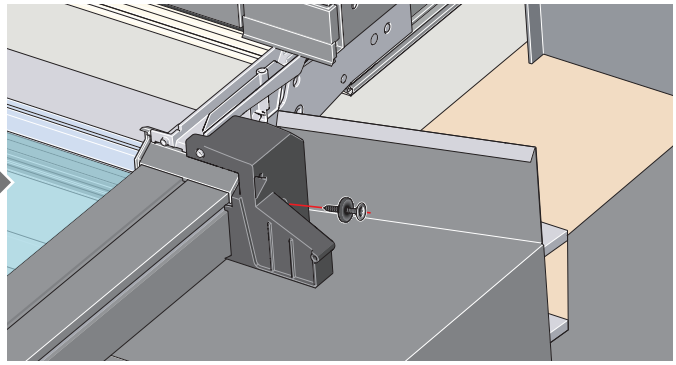

53

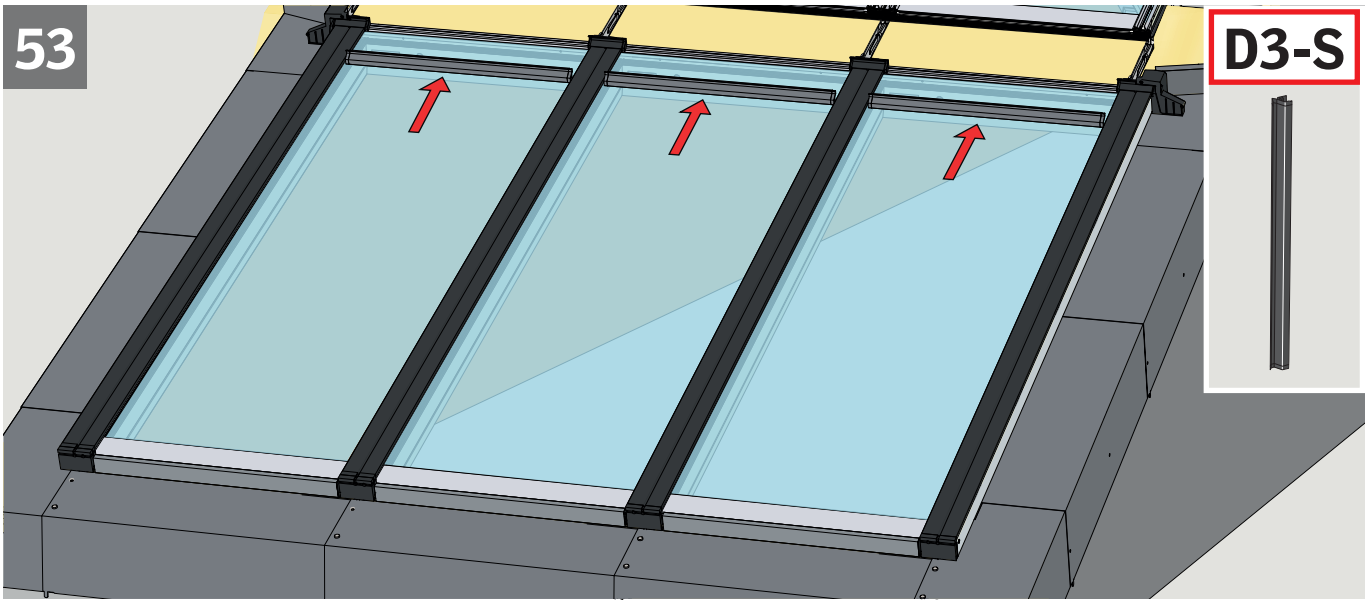

D3-S

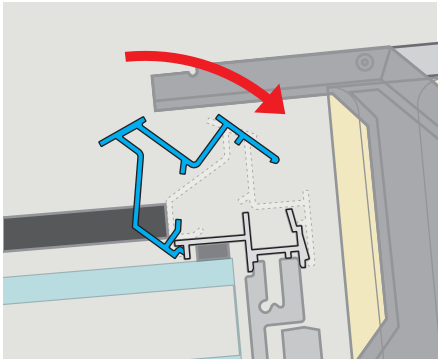

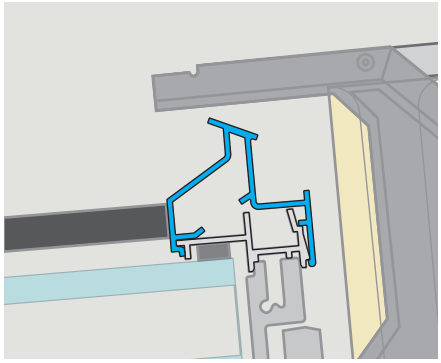

54

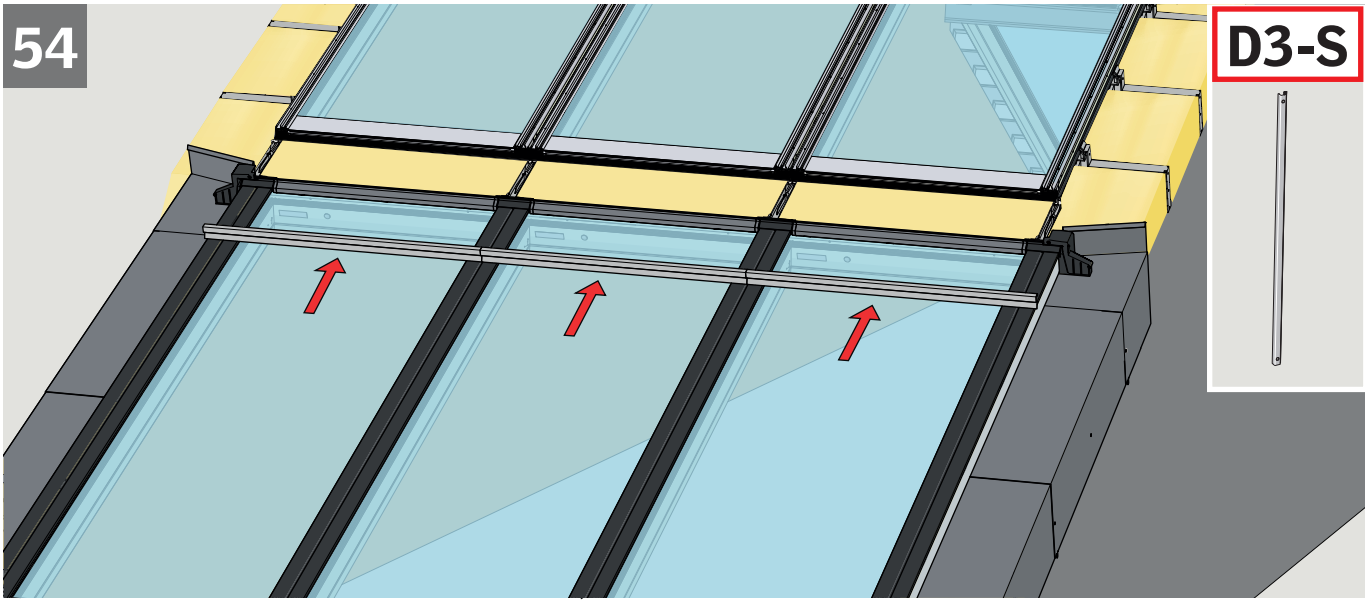

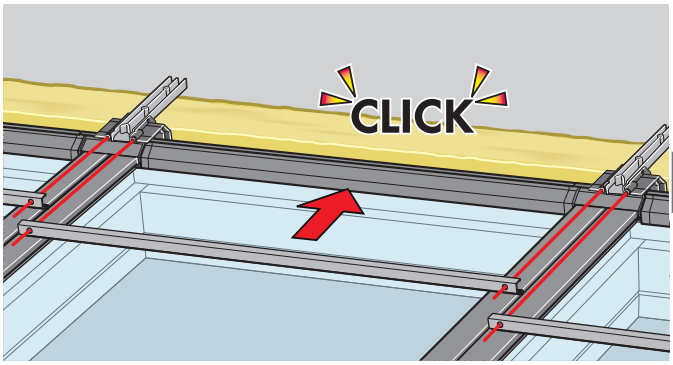

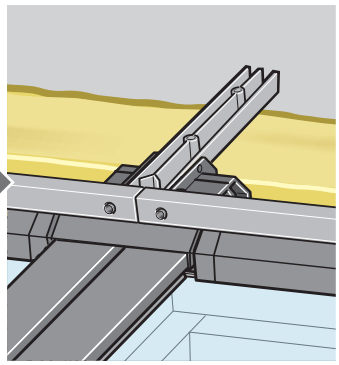

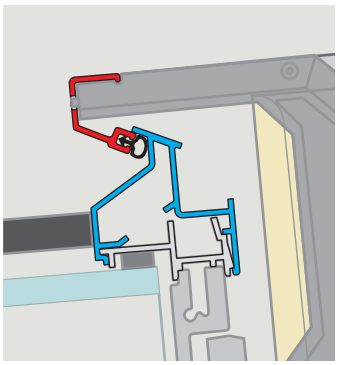

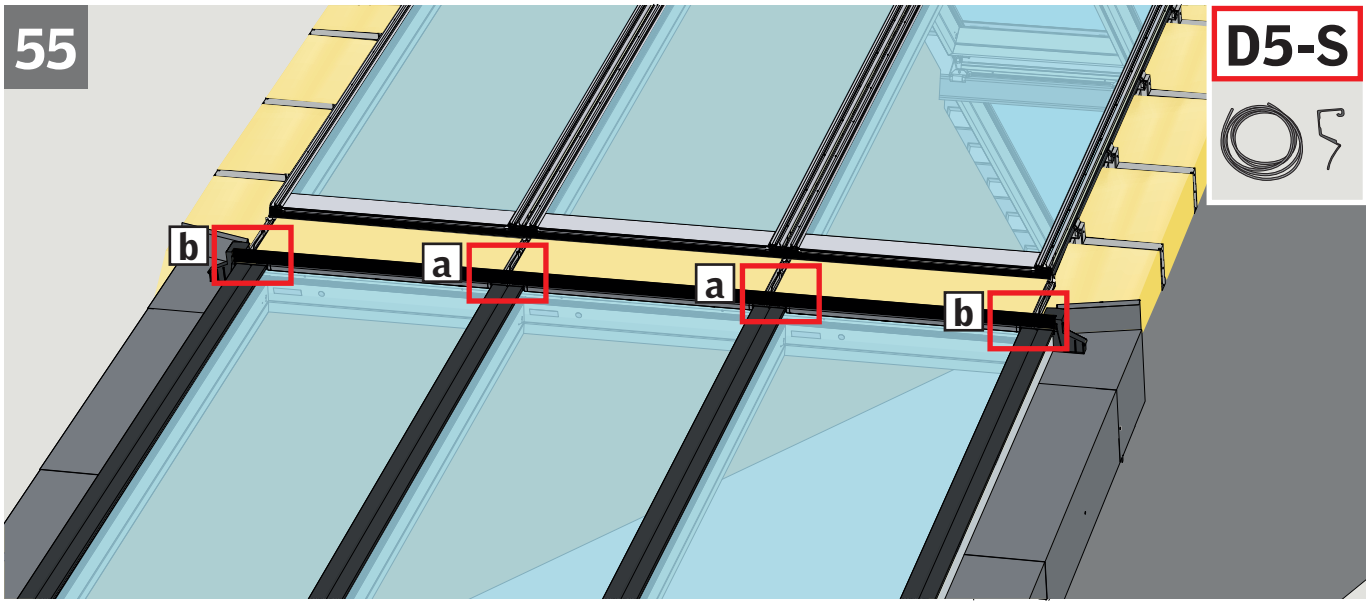
55
D5-S
b
a
a
b

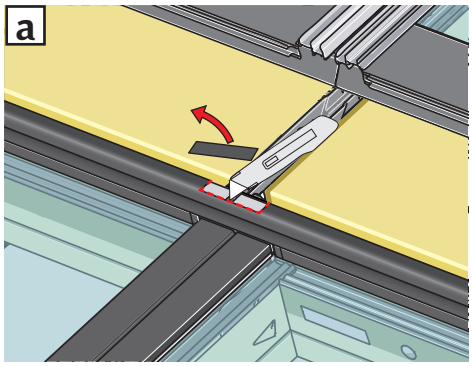
a

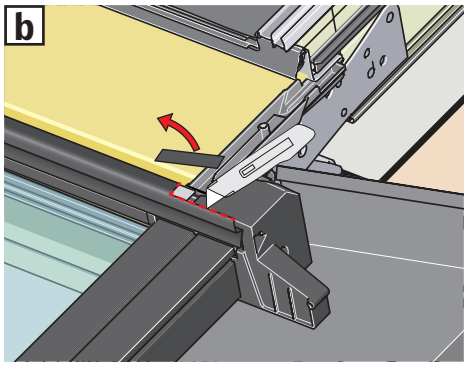
b

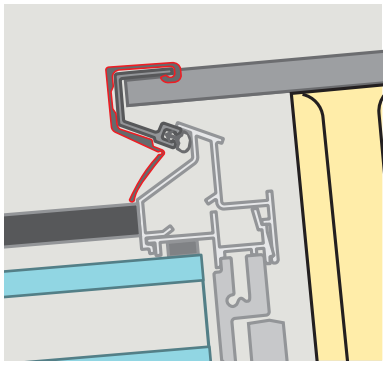

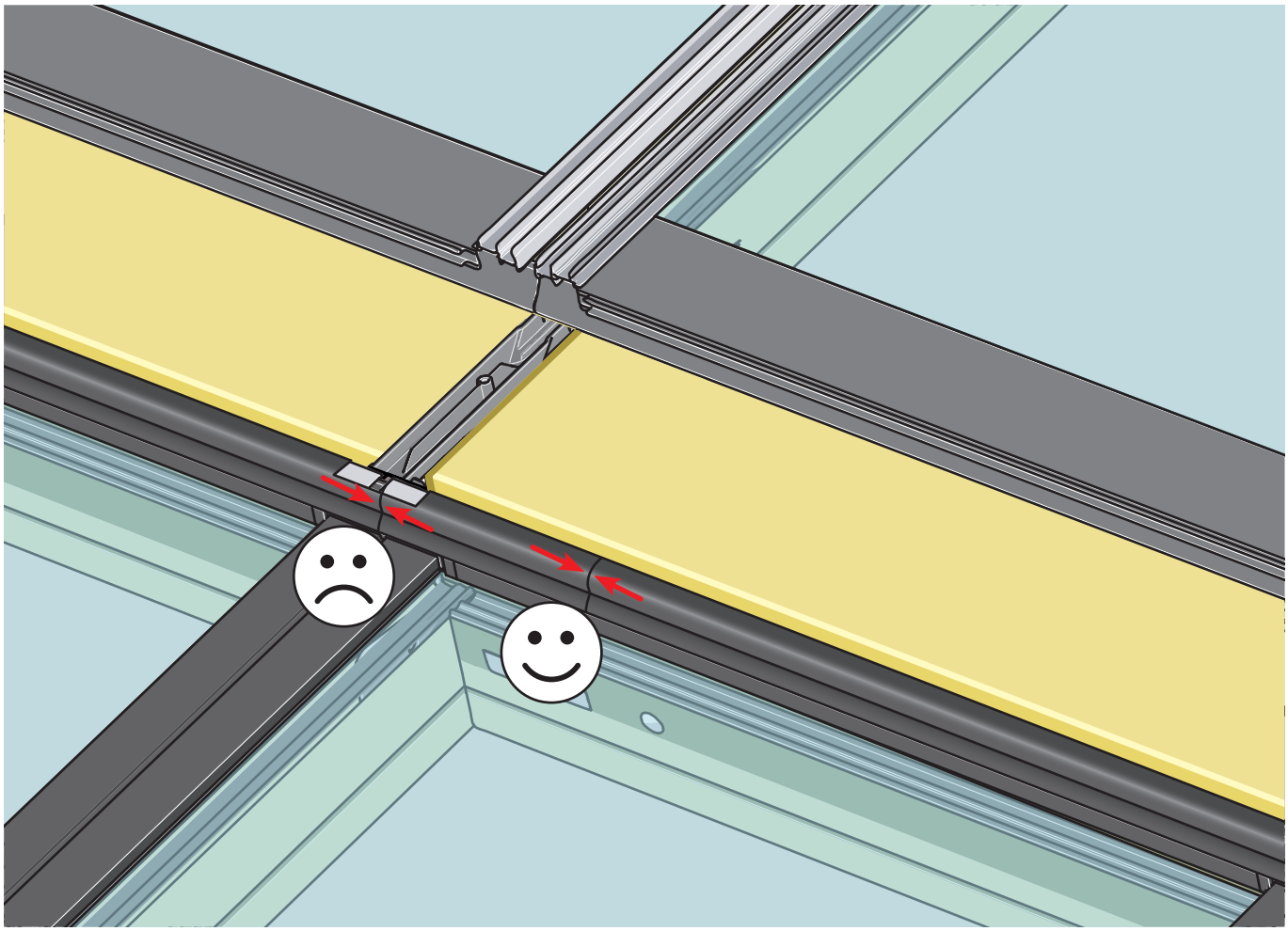

56

C3-S

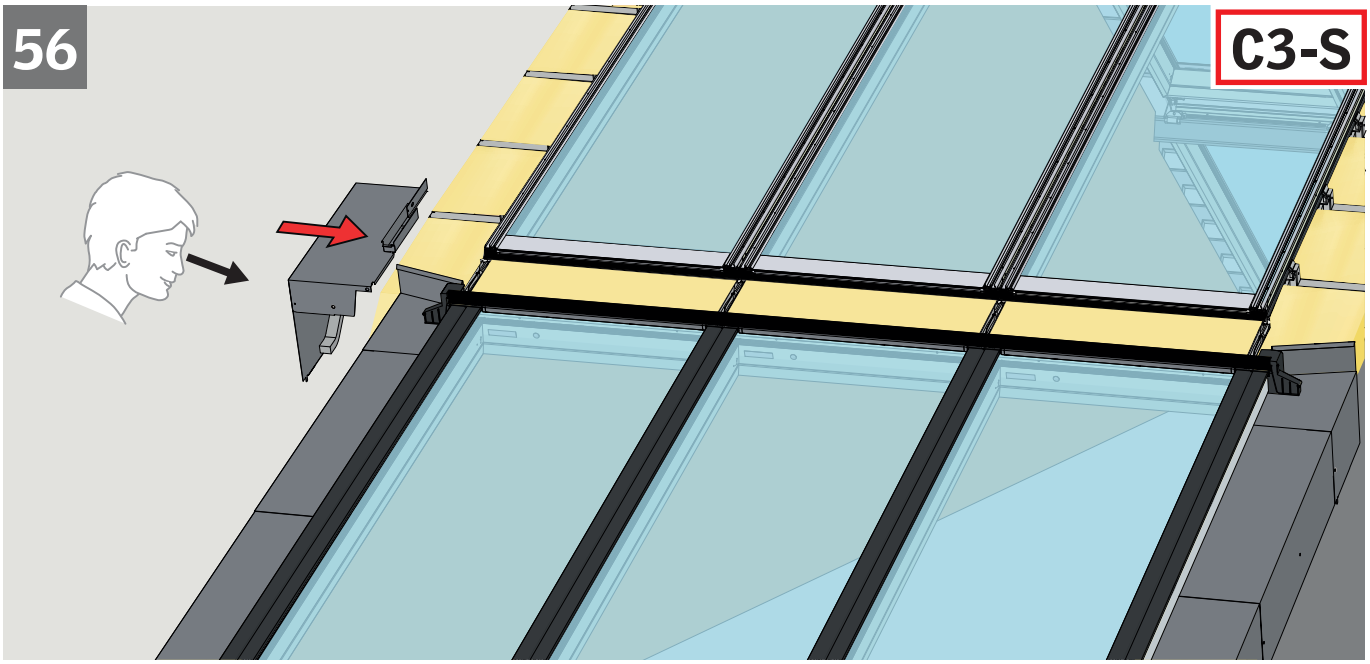

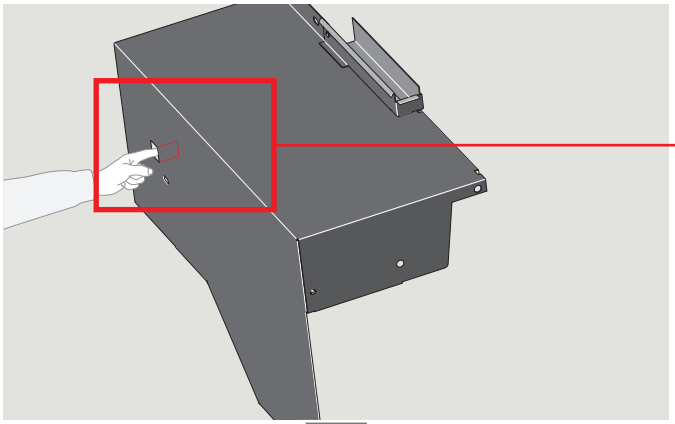

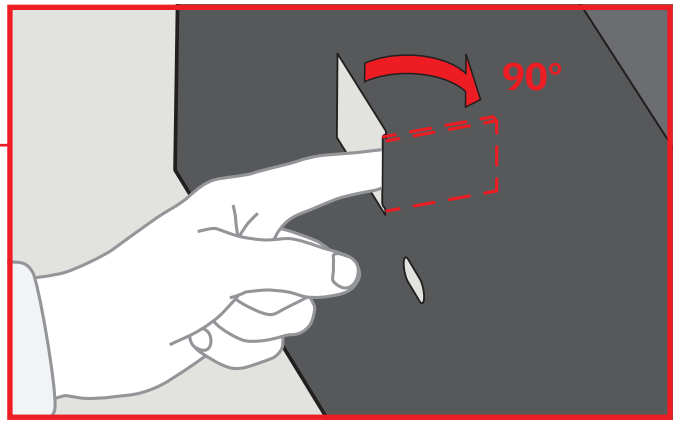

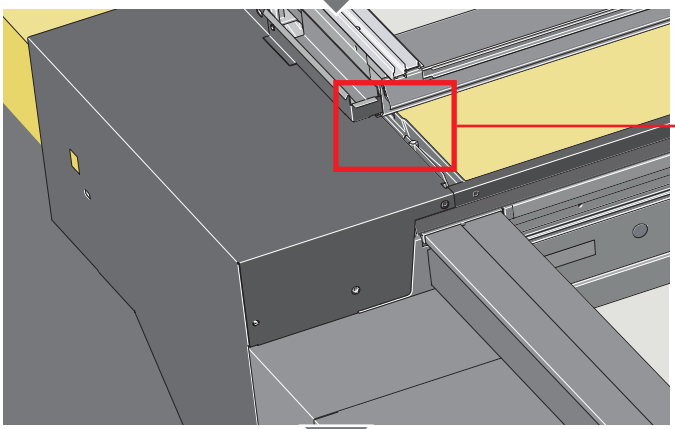

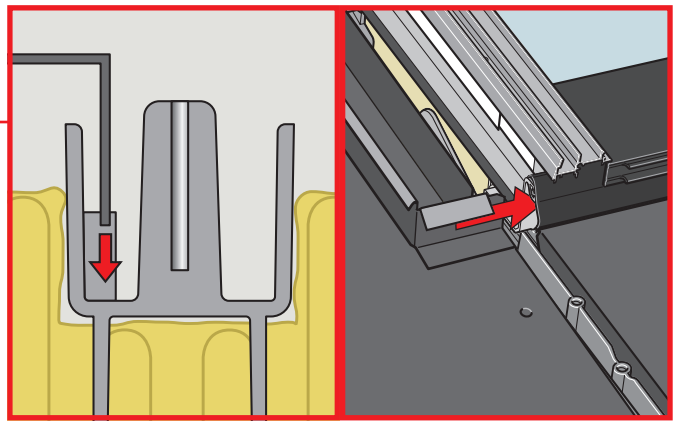

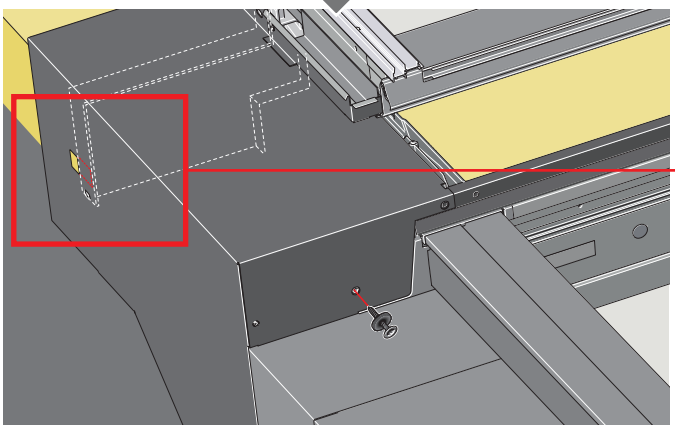

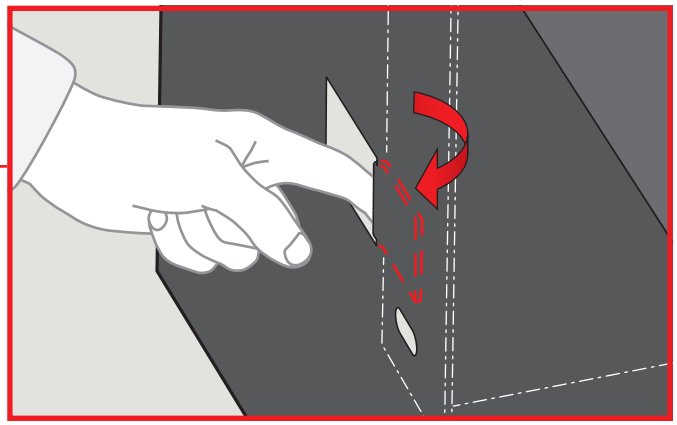

57

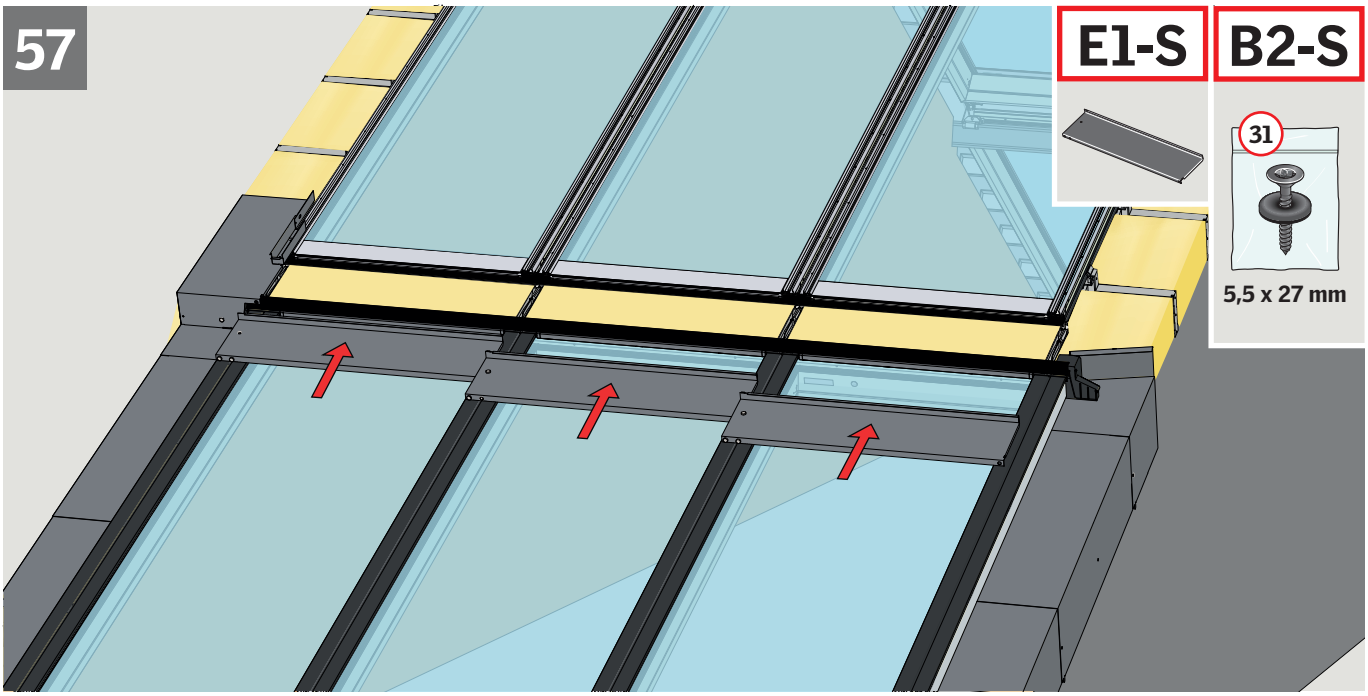

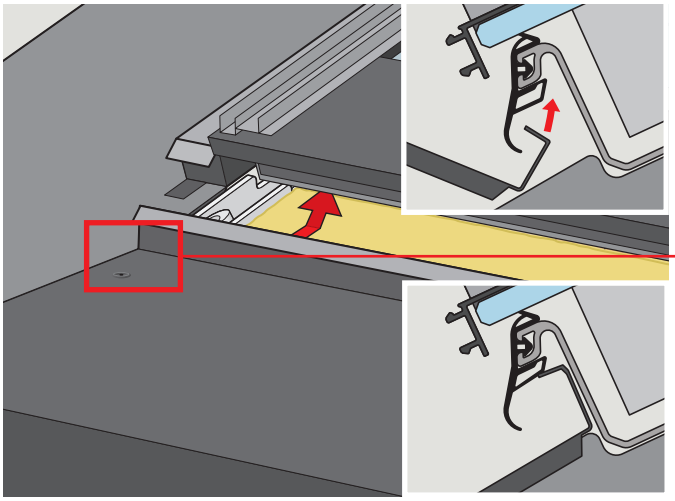

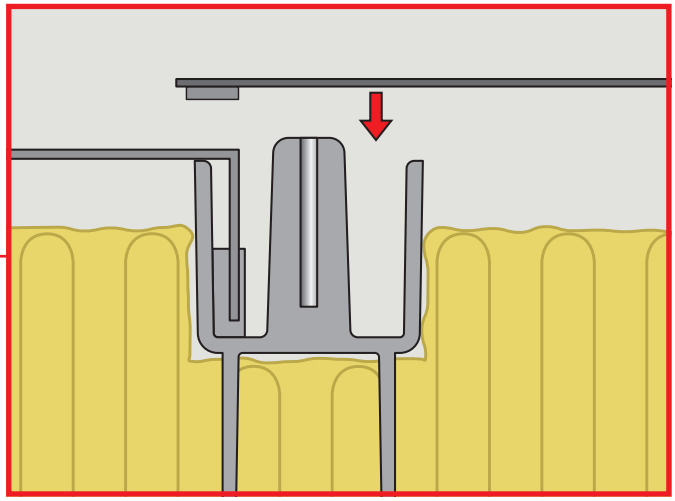

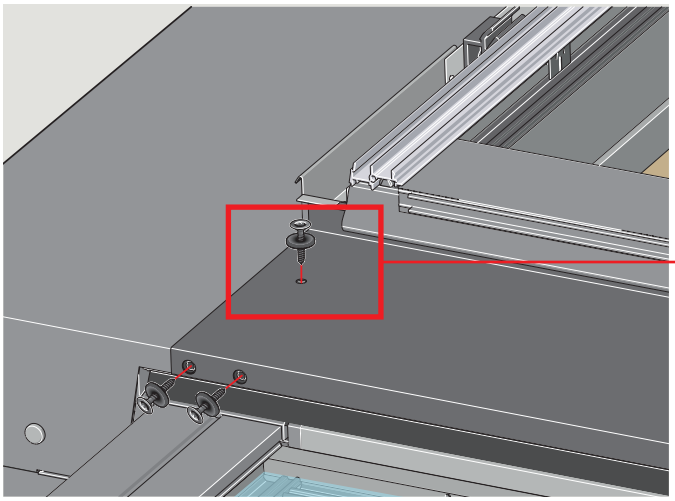

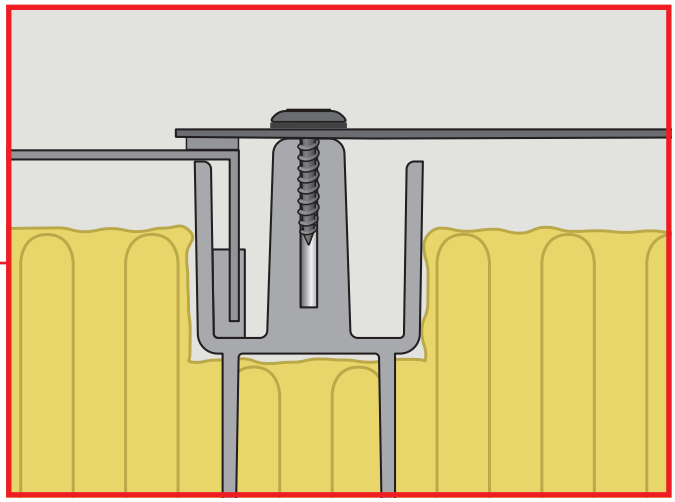

58

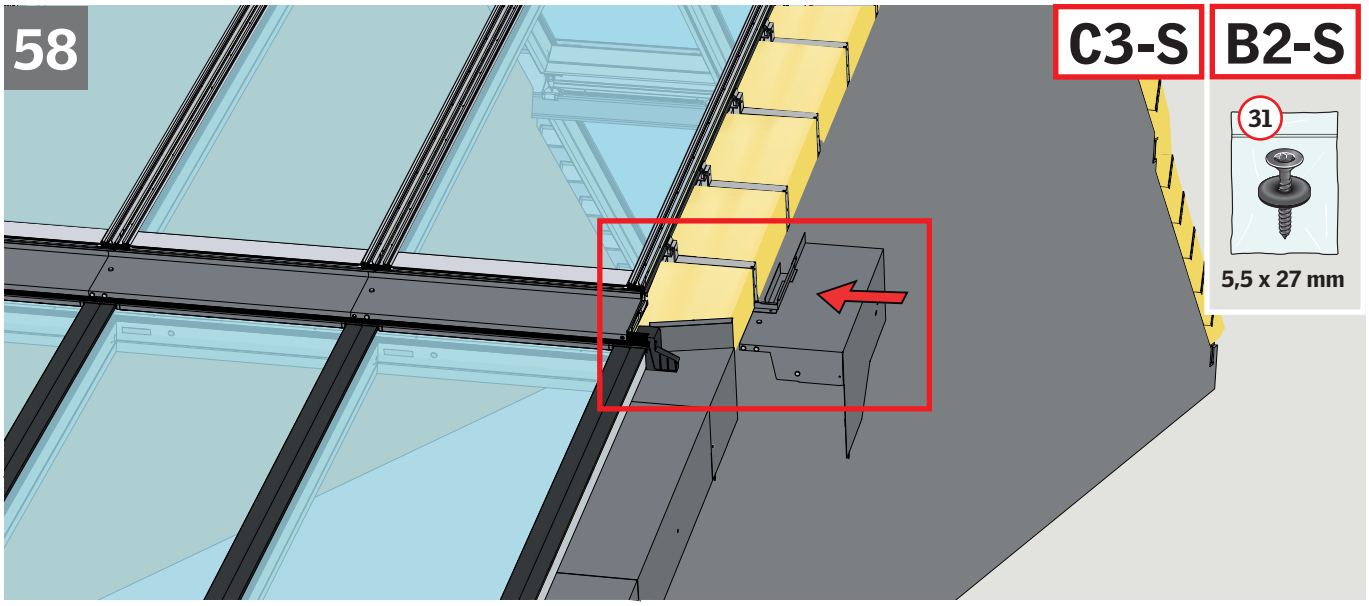

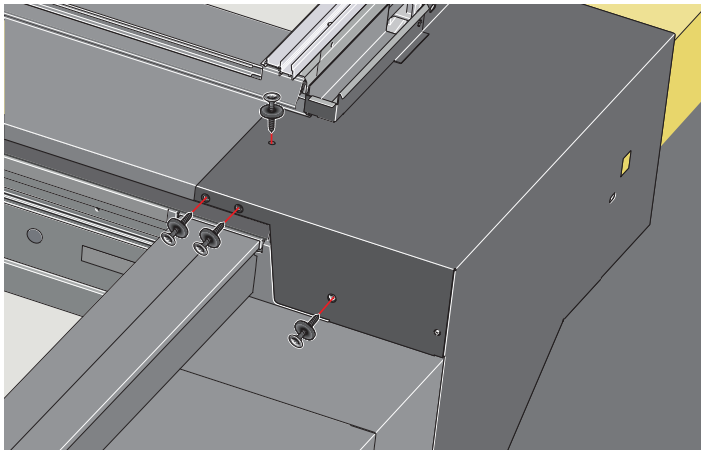

47 ▶ 48

59

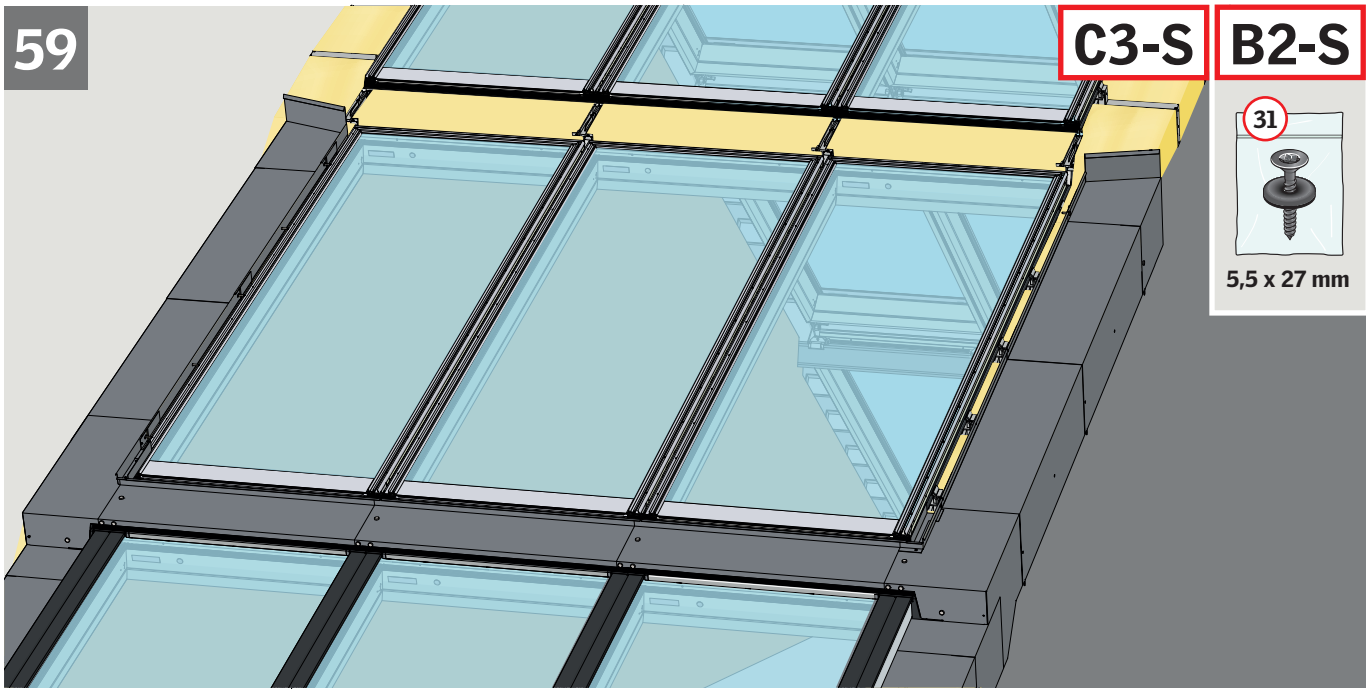

60

D1-S

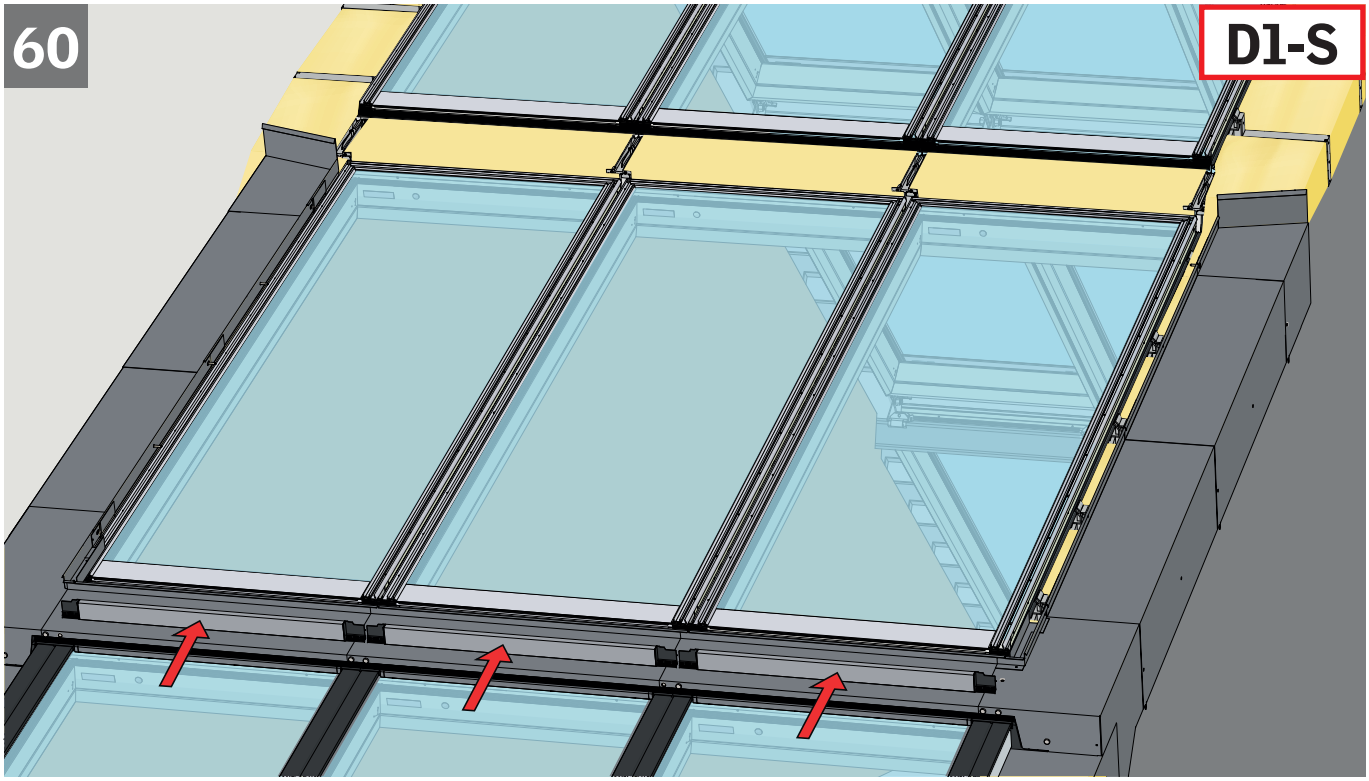

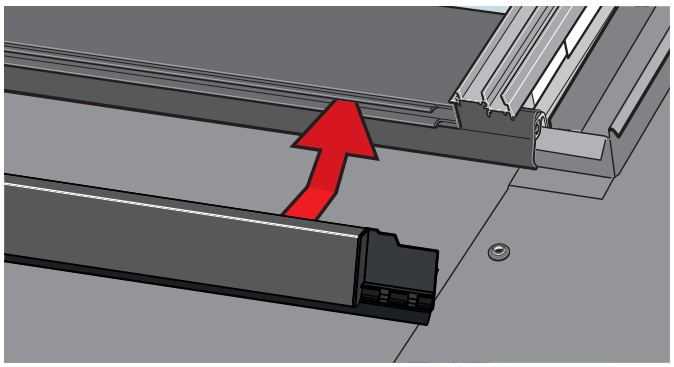

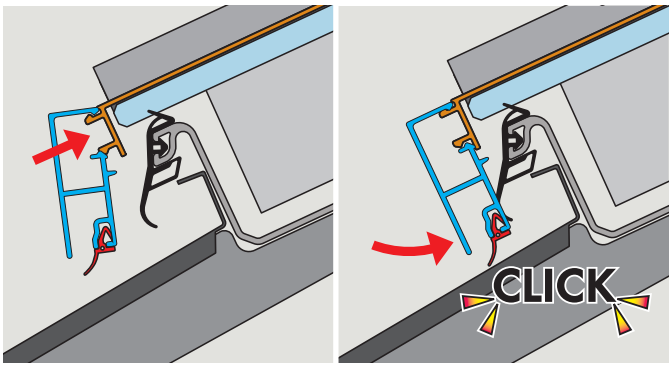

50 ▶ 55

61

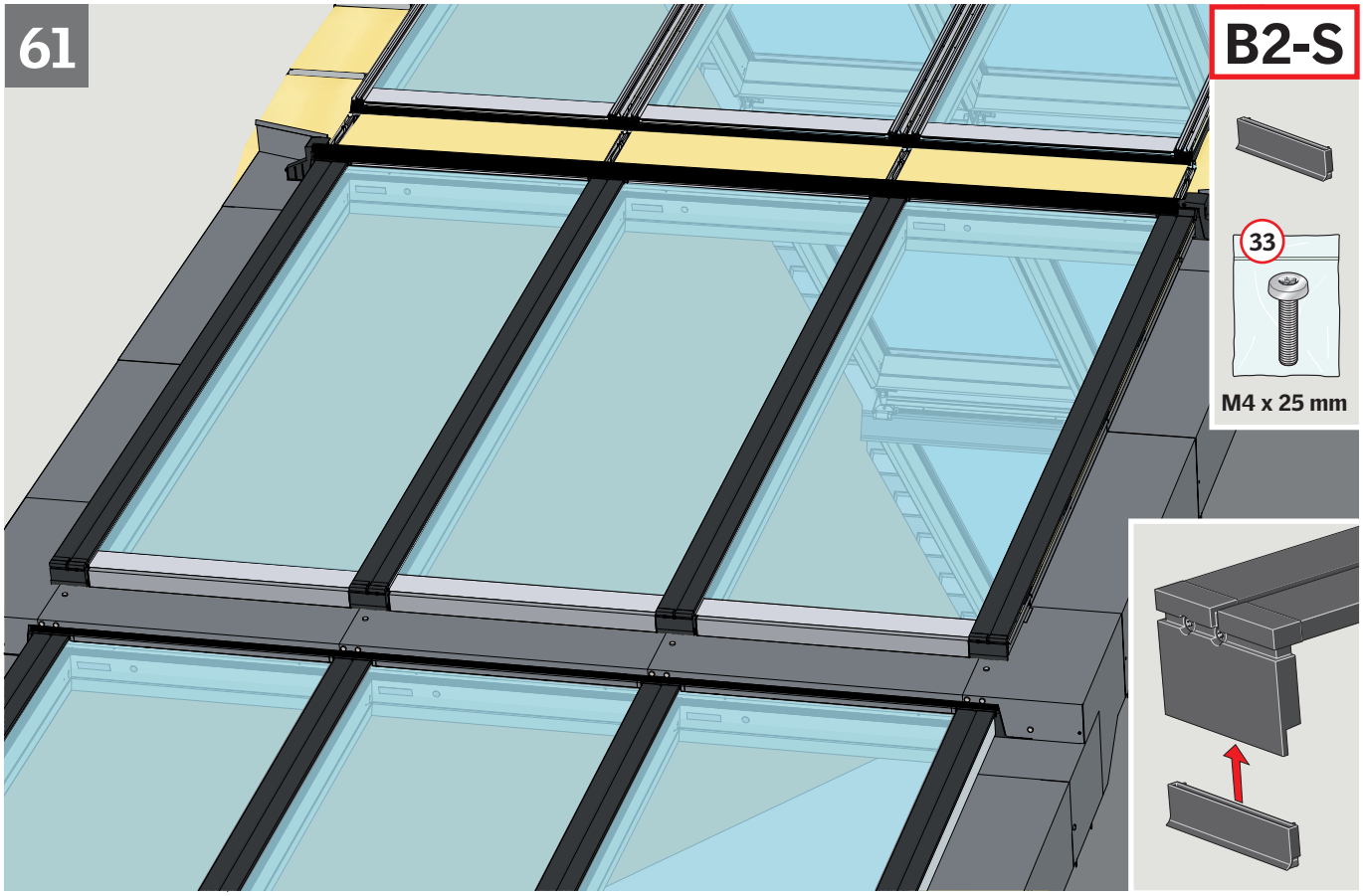

56 ▶ 58

62

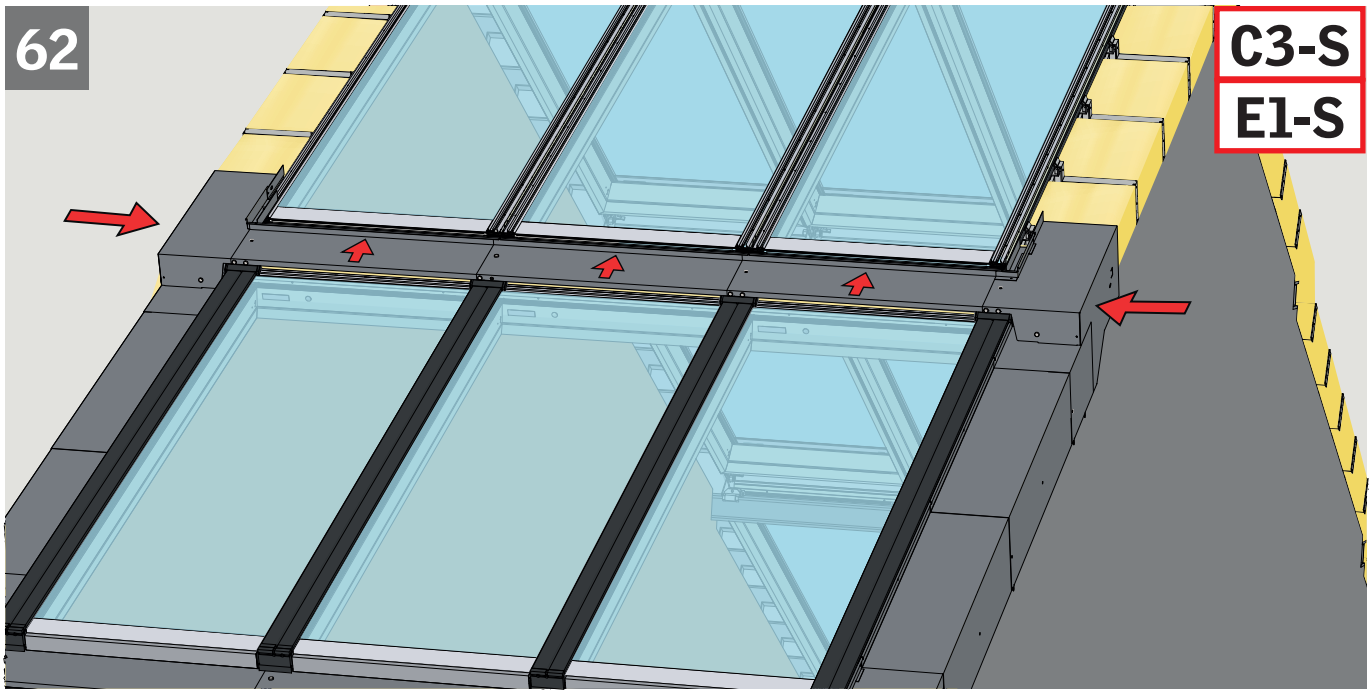

63

C3-R B2-R

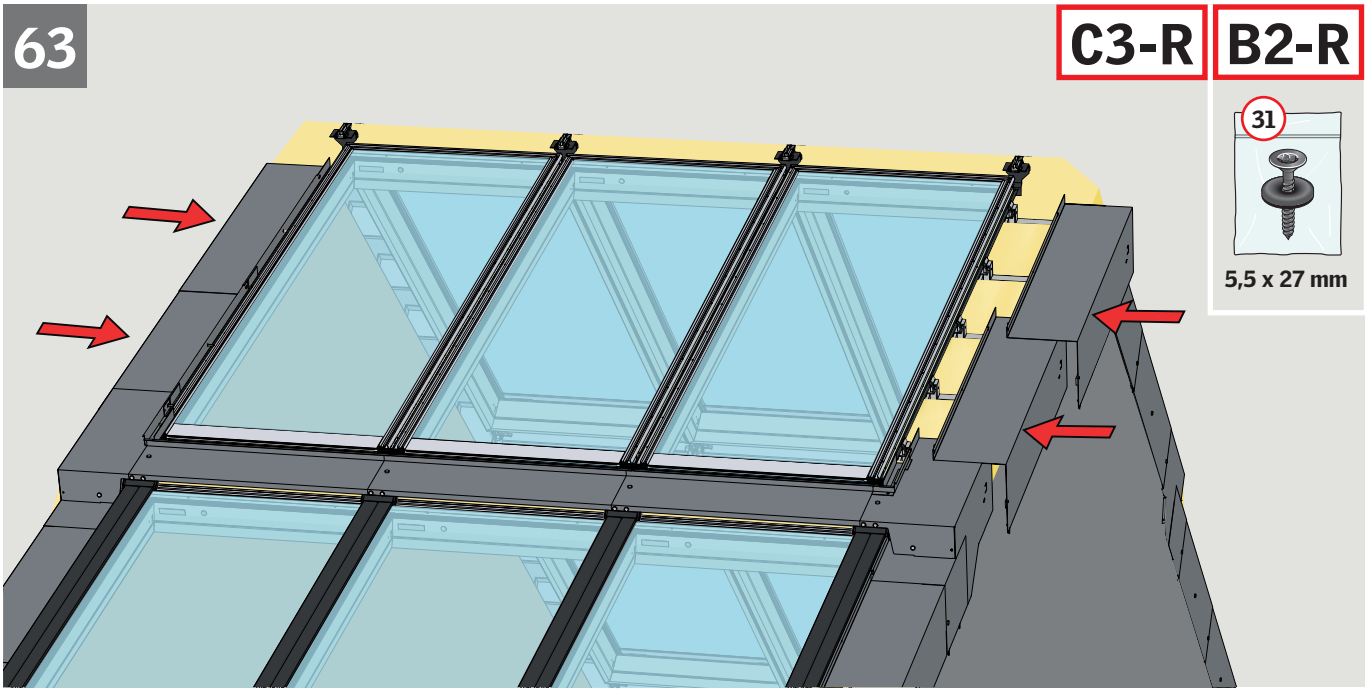

5,5 x 27 mm

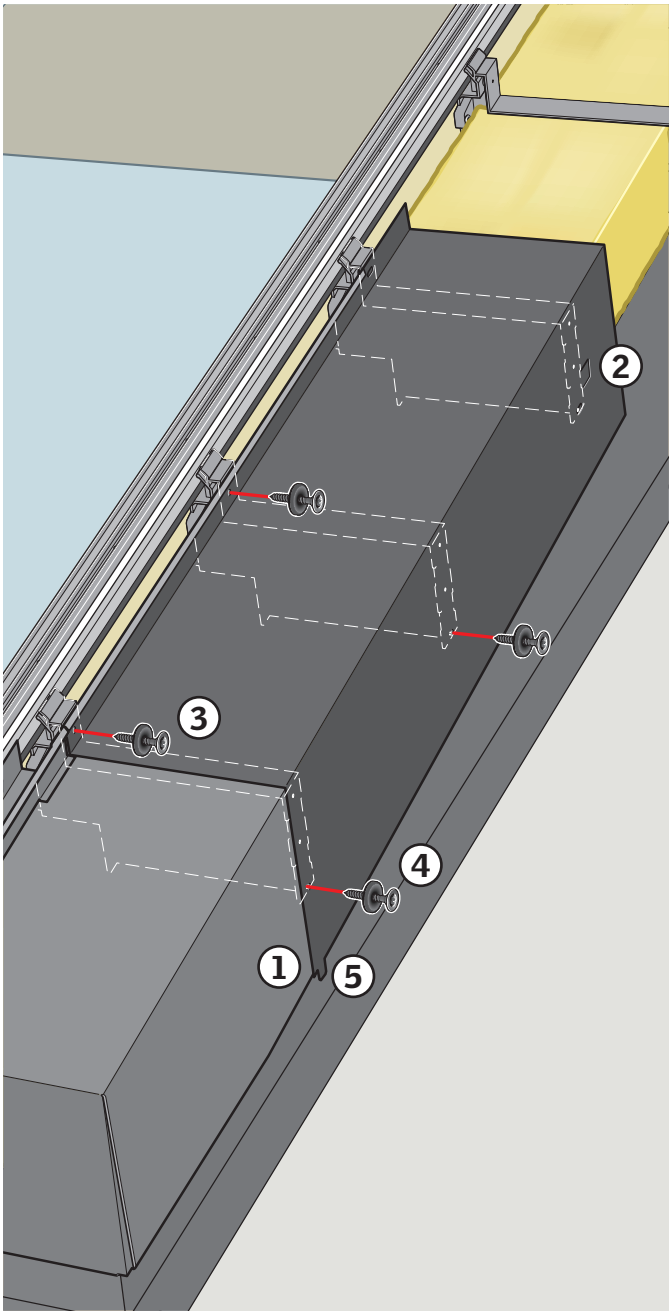

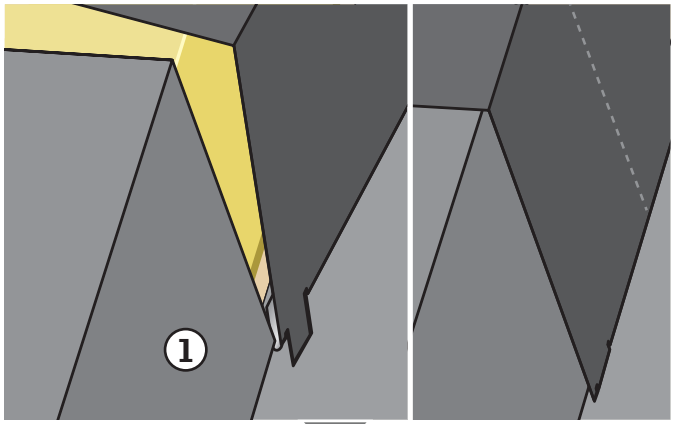

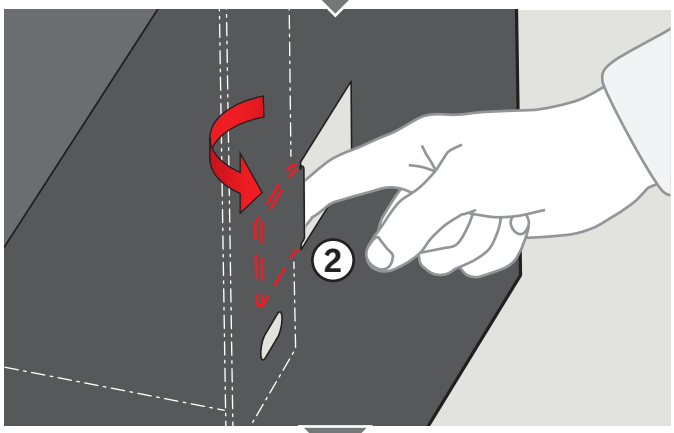

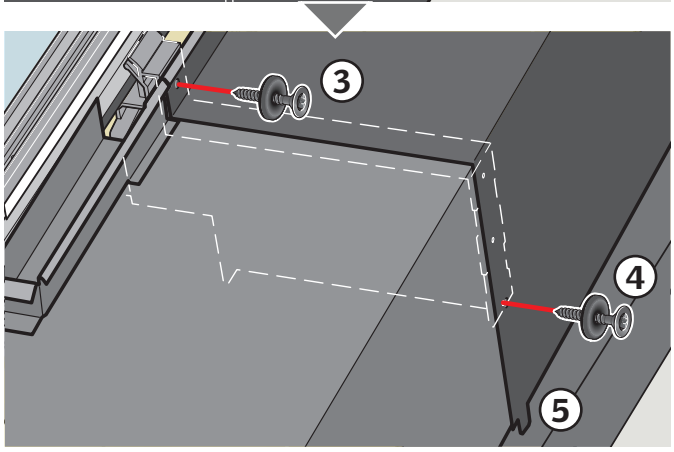

64

E2-R B2-R



5,5 x 27 mm

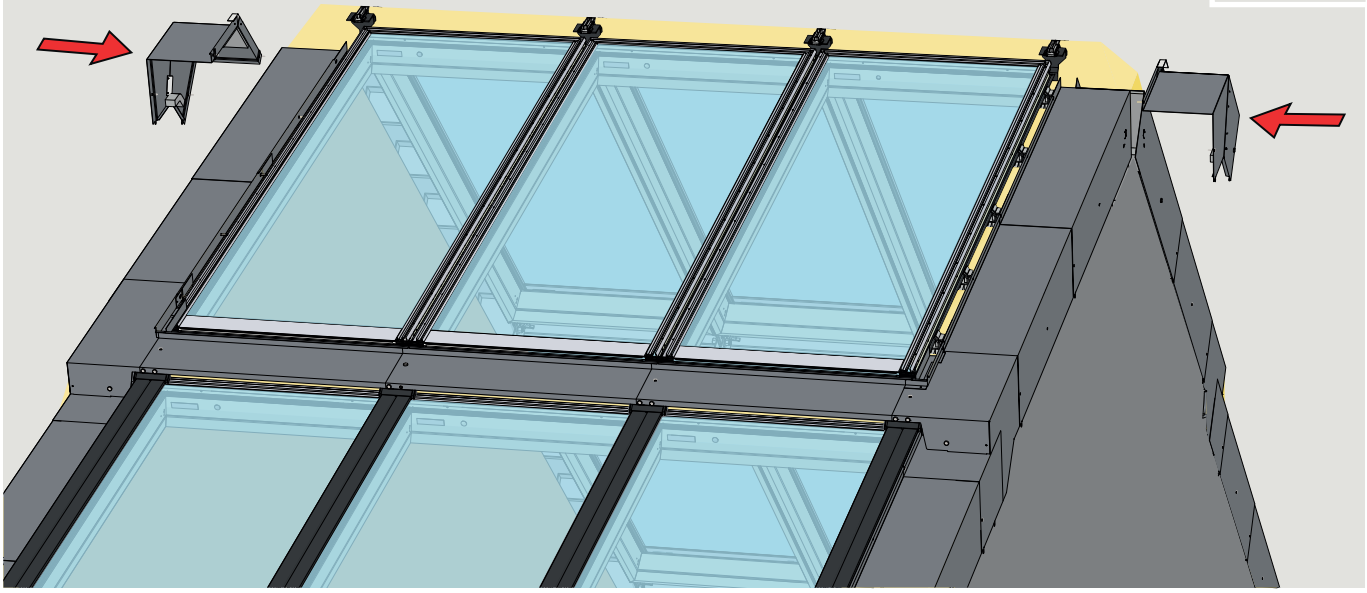

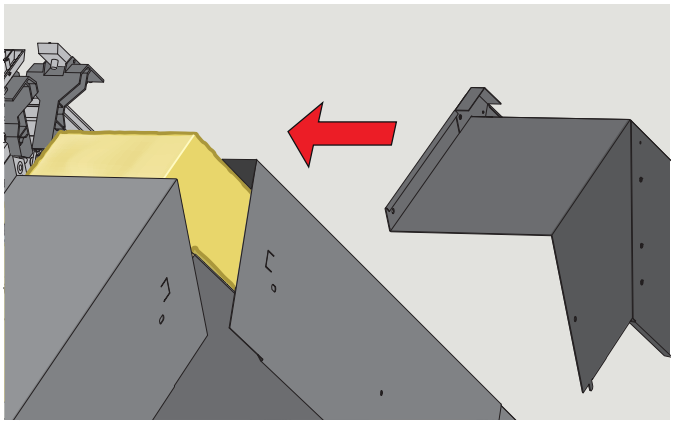

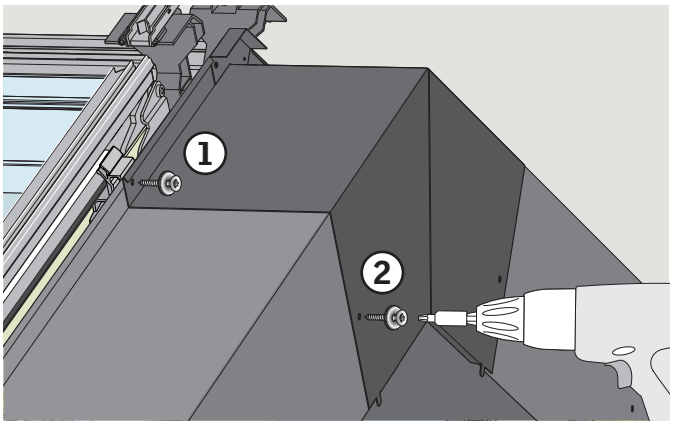

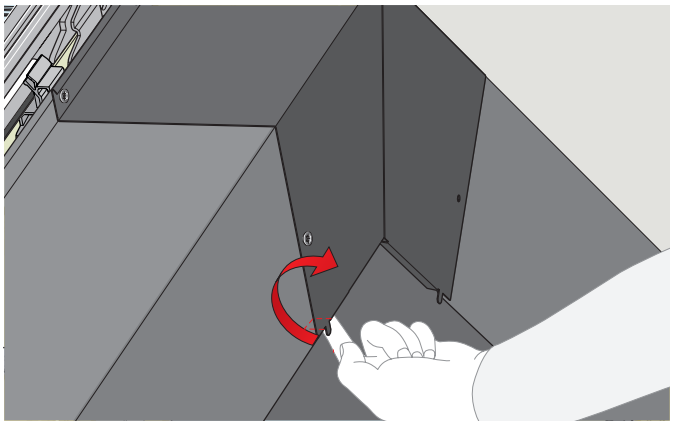

65

D1-S

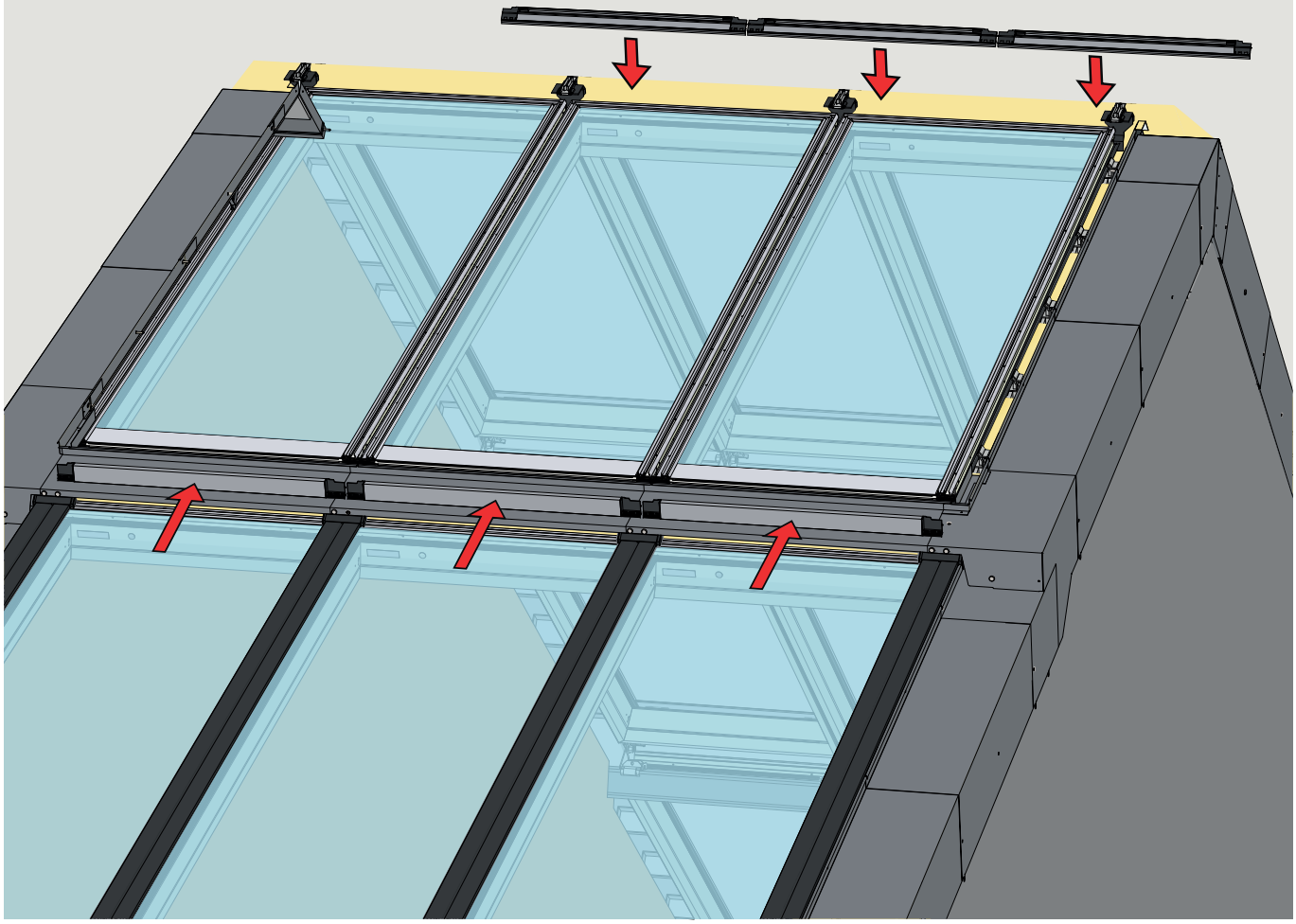

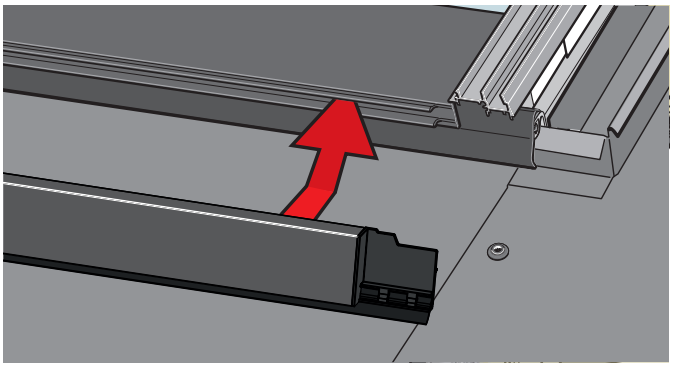

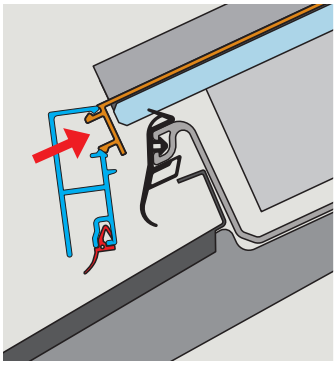

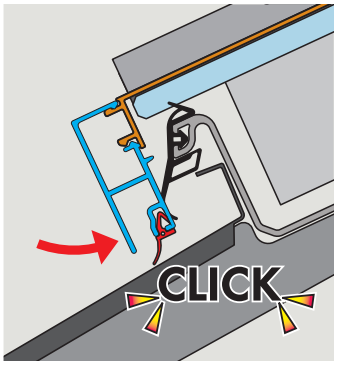

66

D2-R

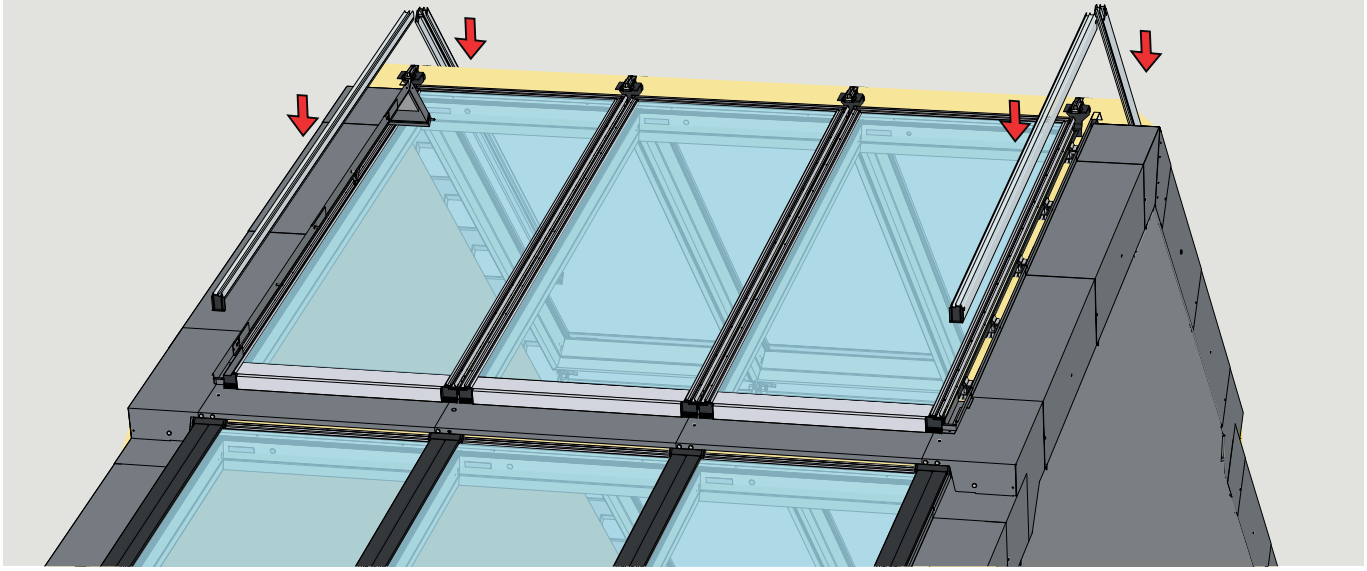

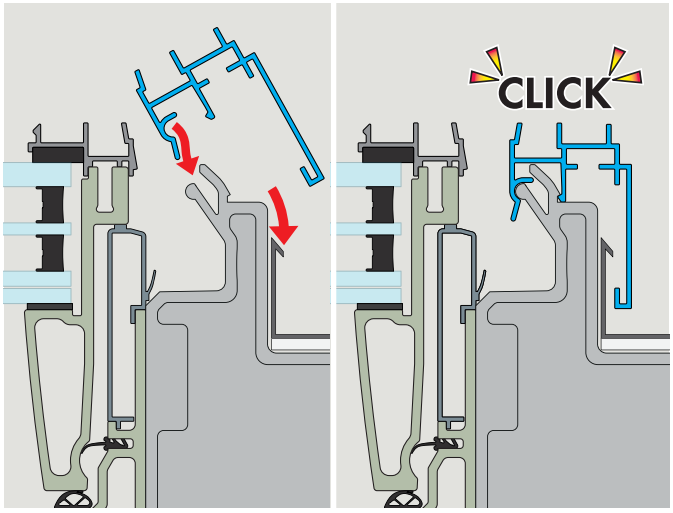

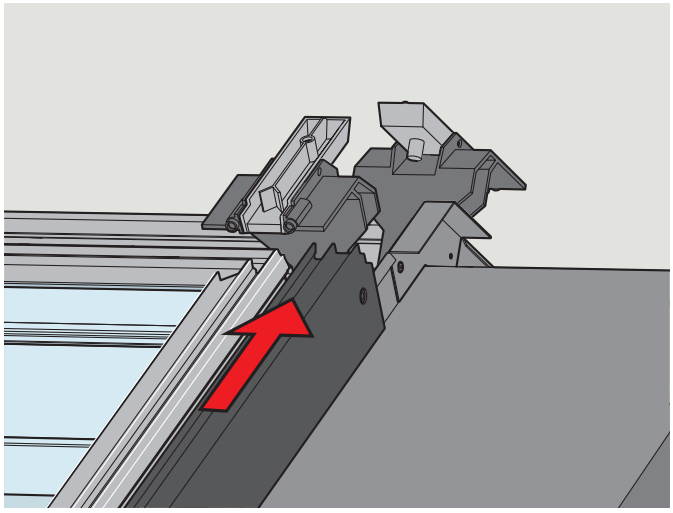

67

D2-R B2-S

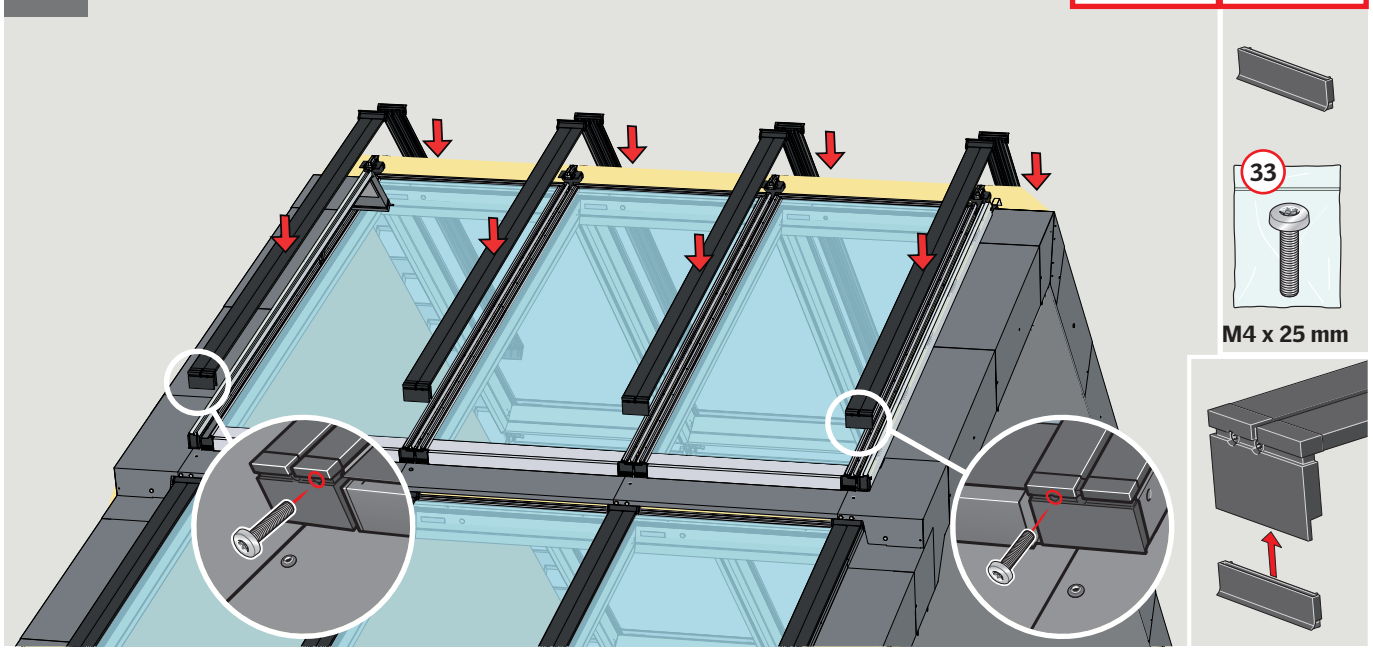

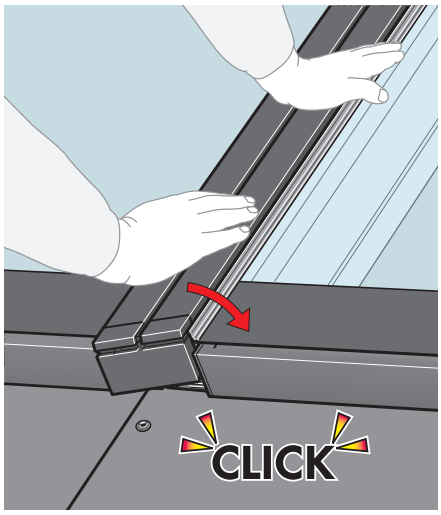

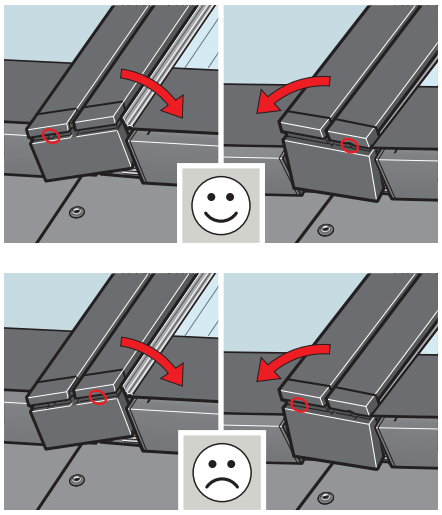

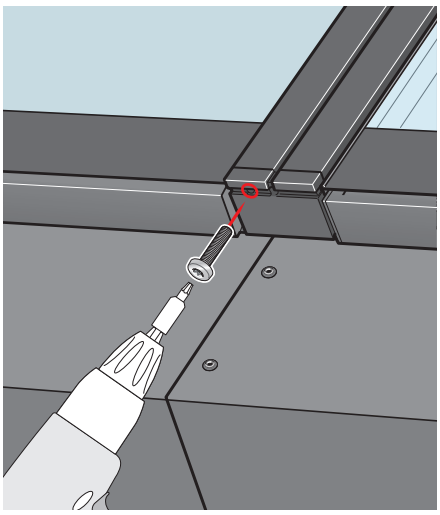

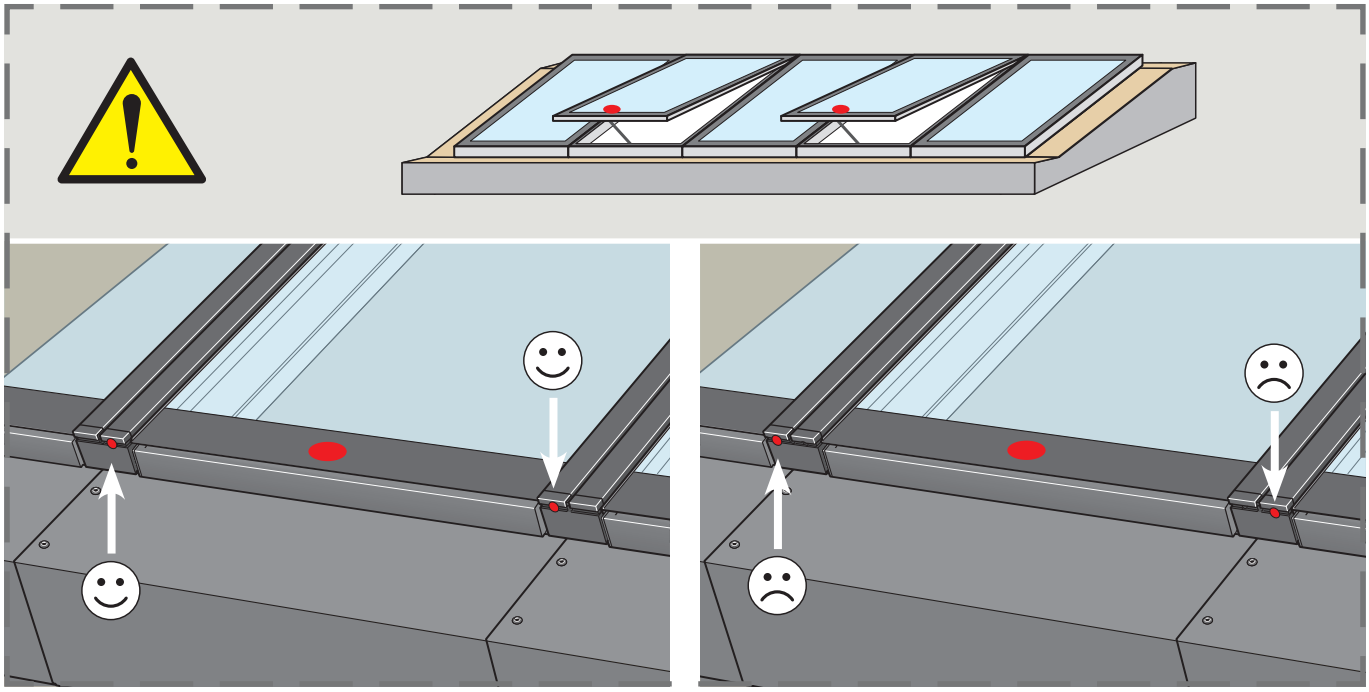

68

D3-R

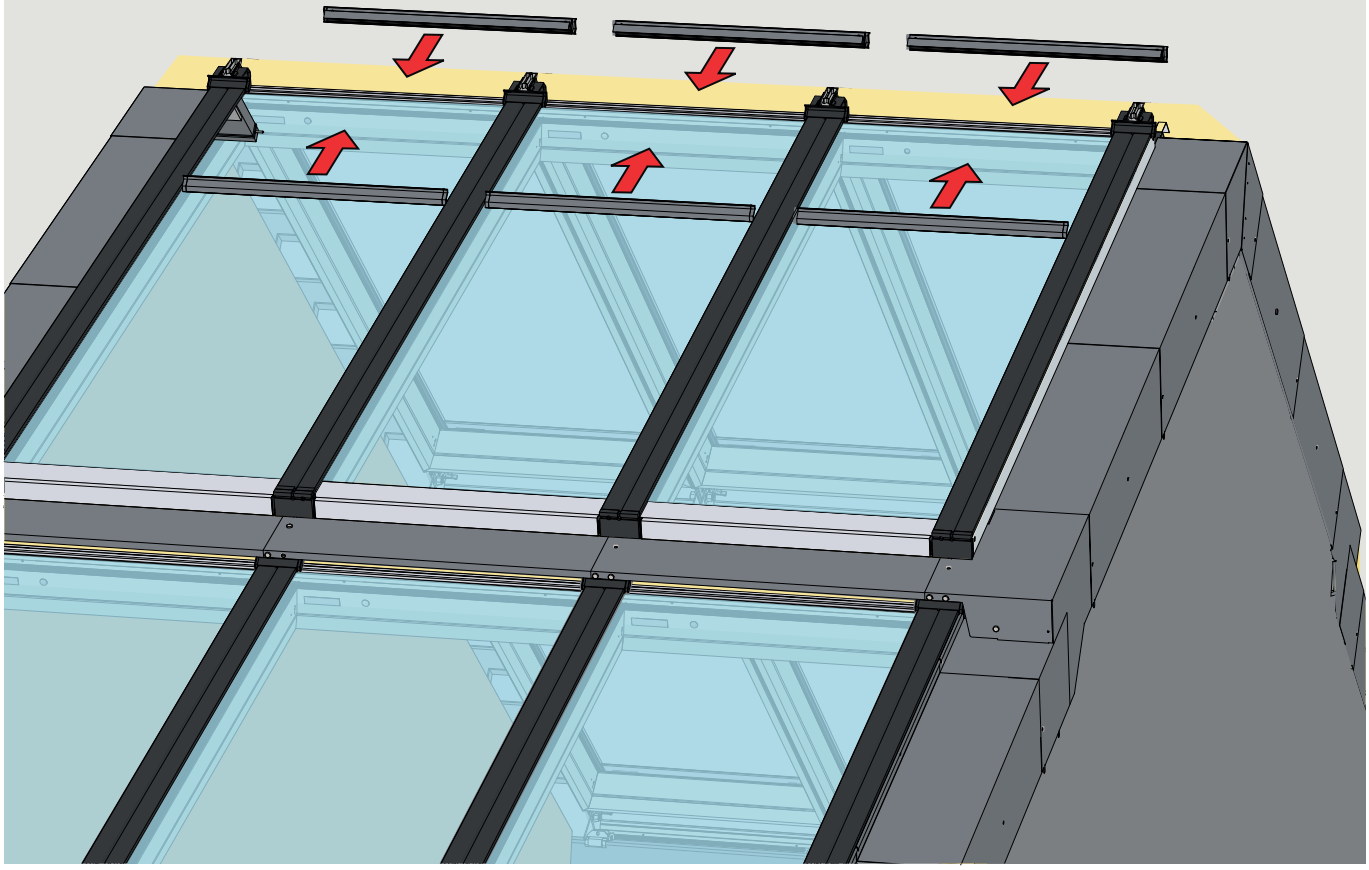

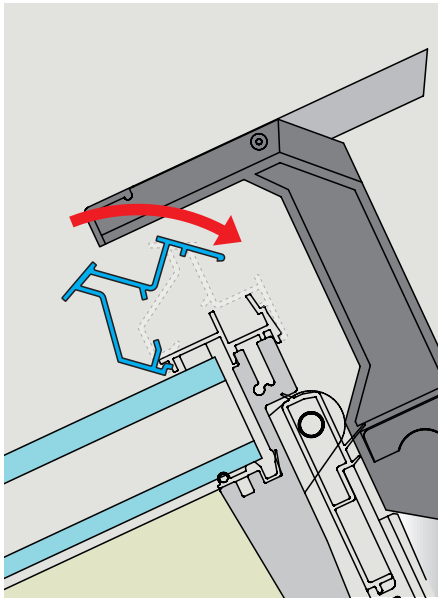

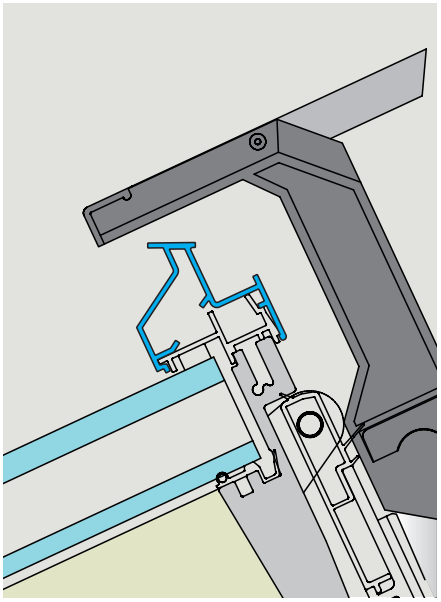

69

D3-R

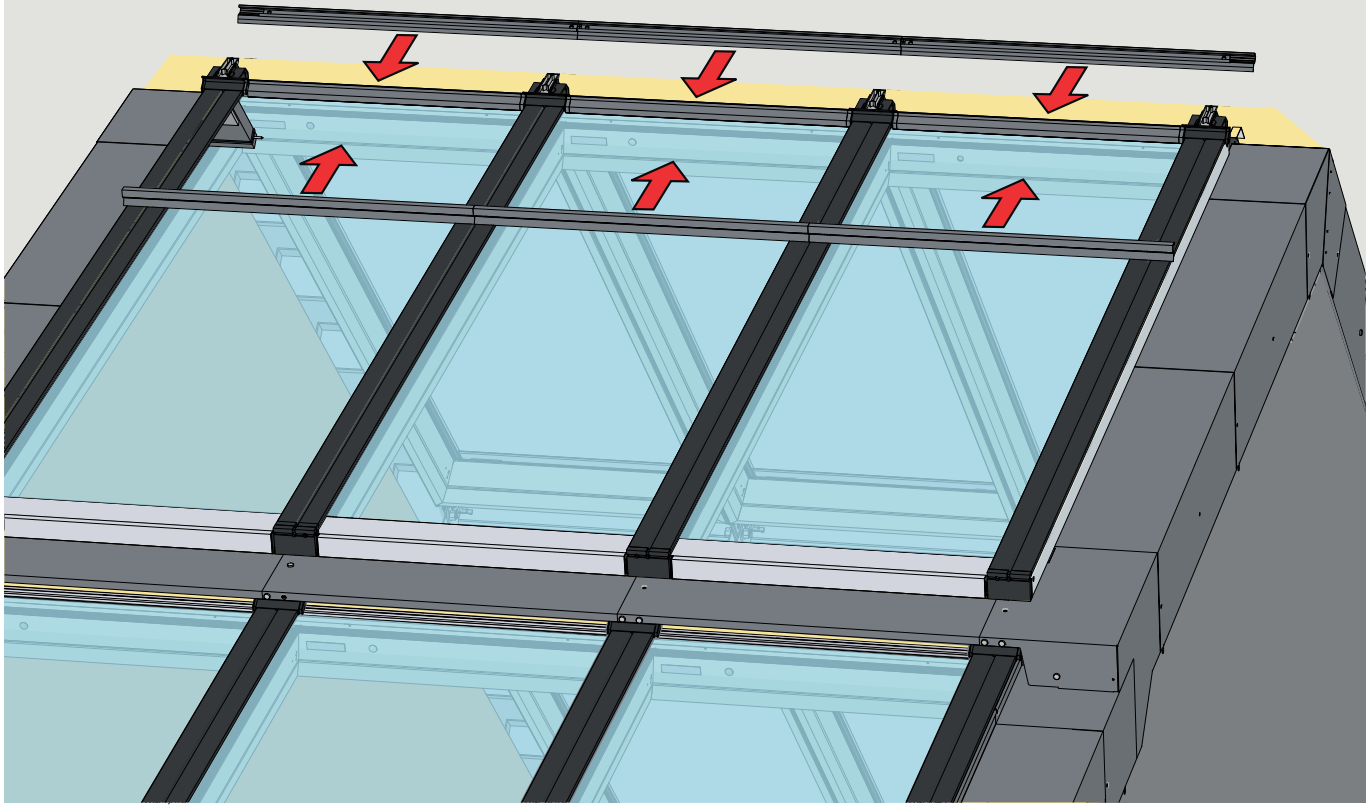

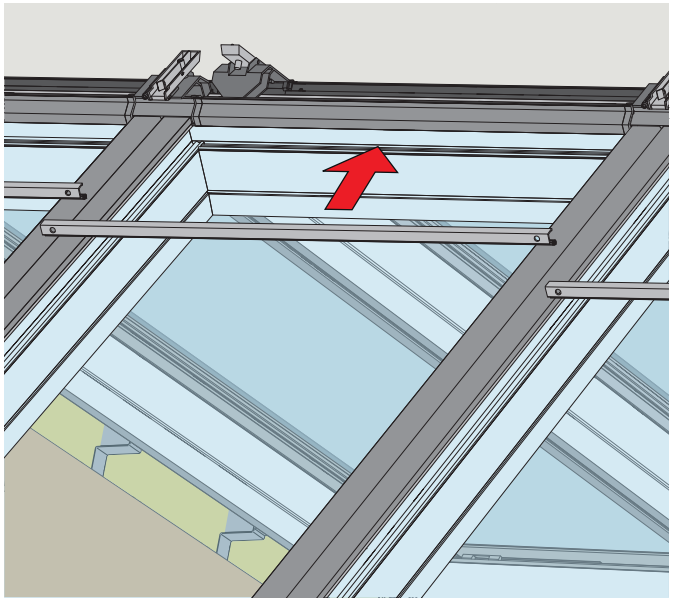

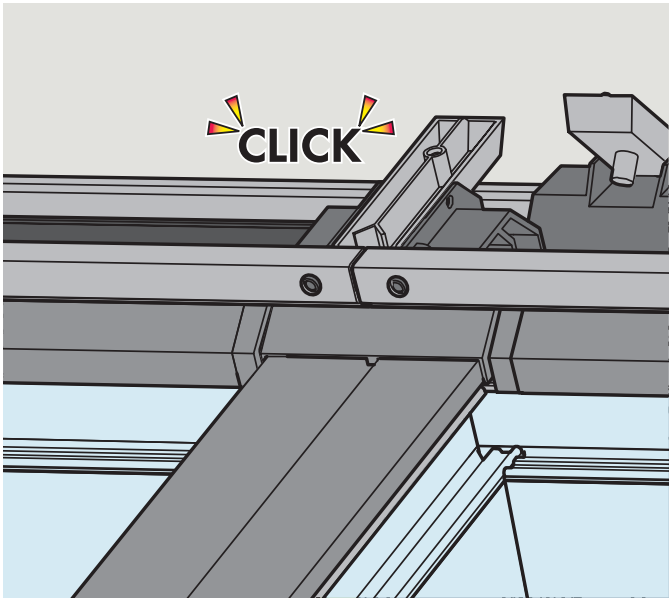

70

B1-R **D4-R**



5,5 x 27 mm

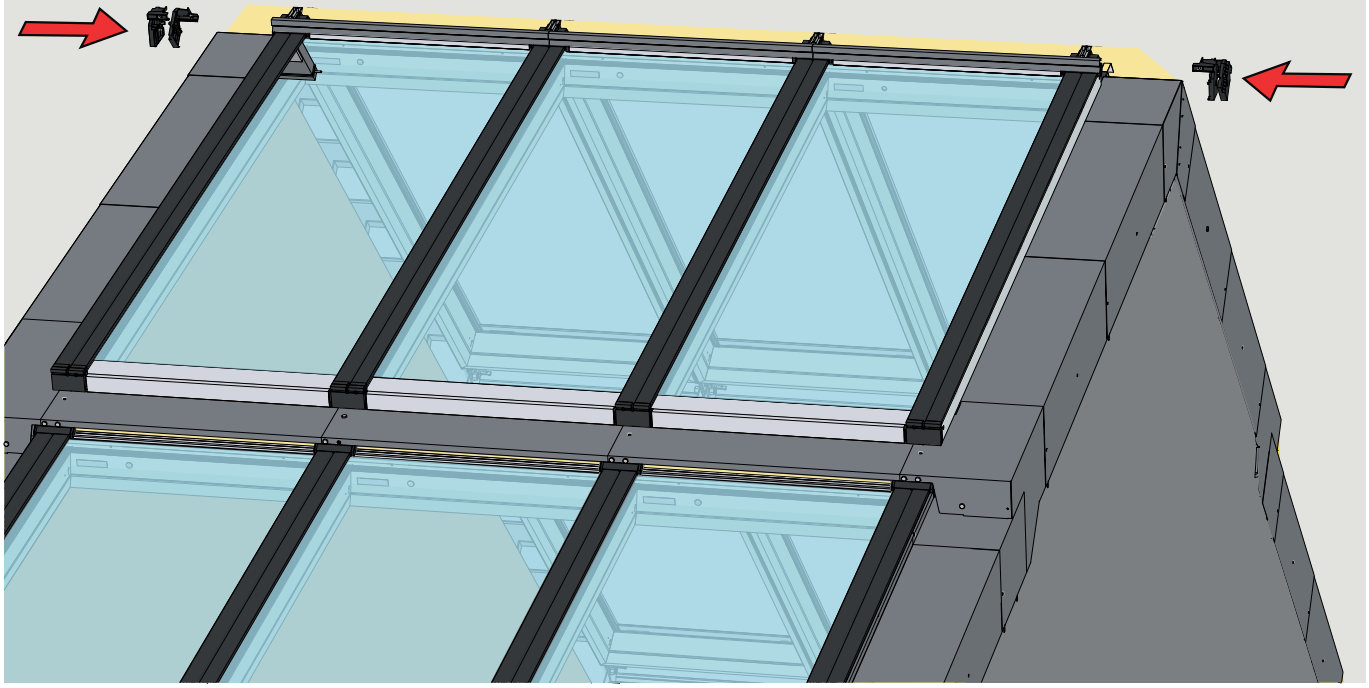

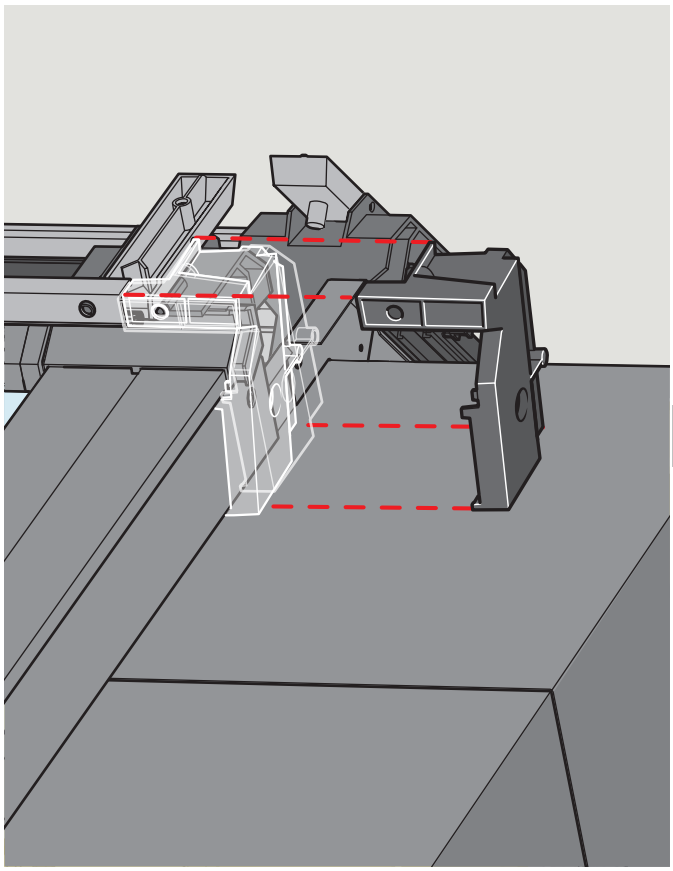

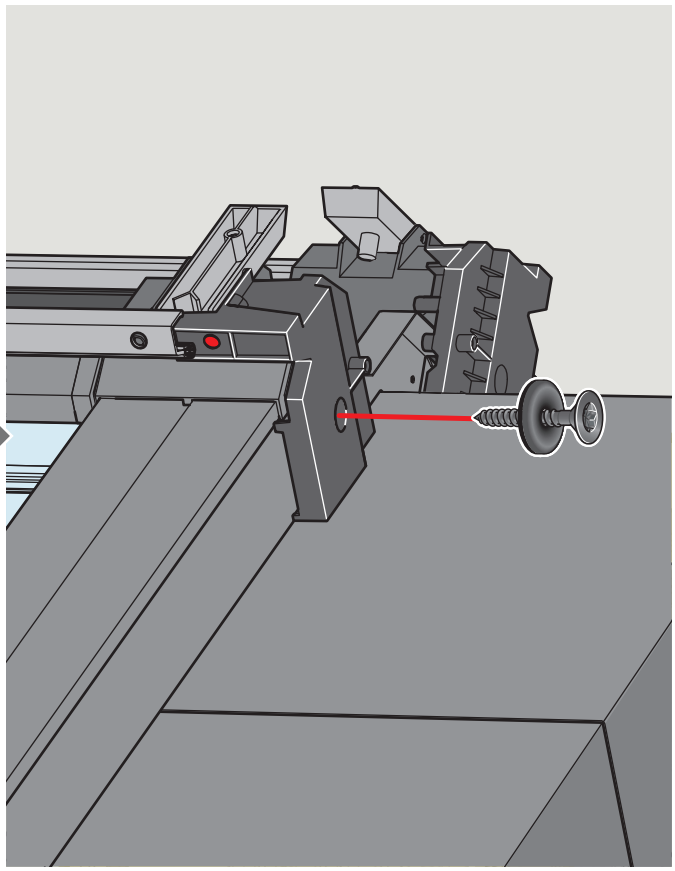

71

E1-R

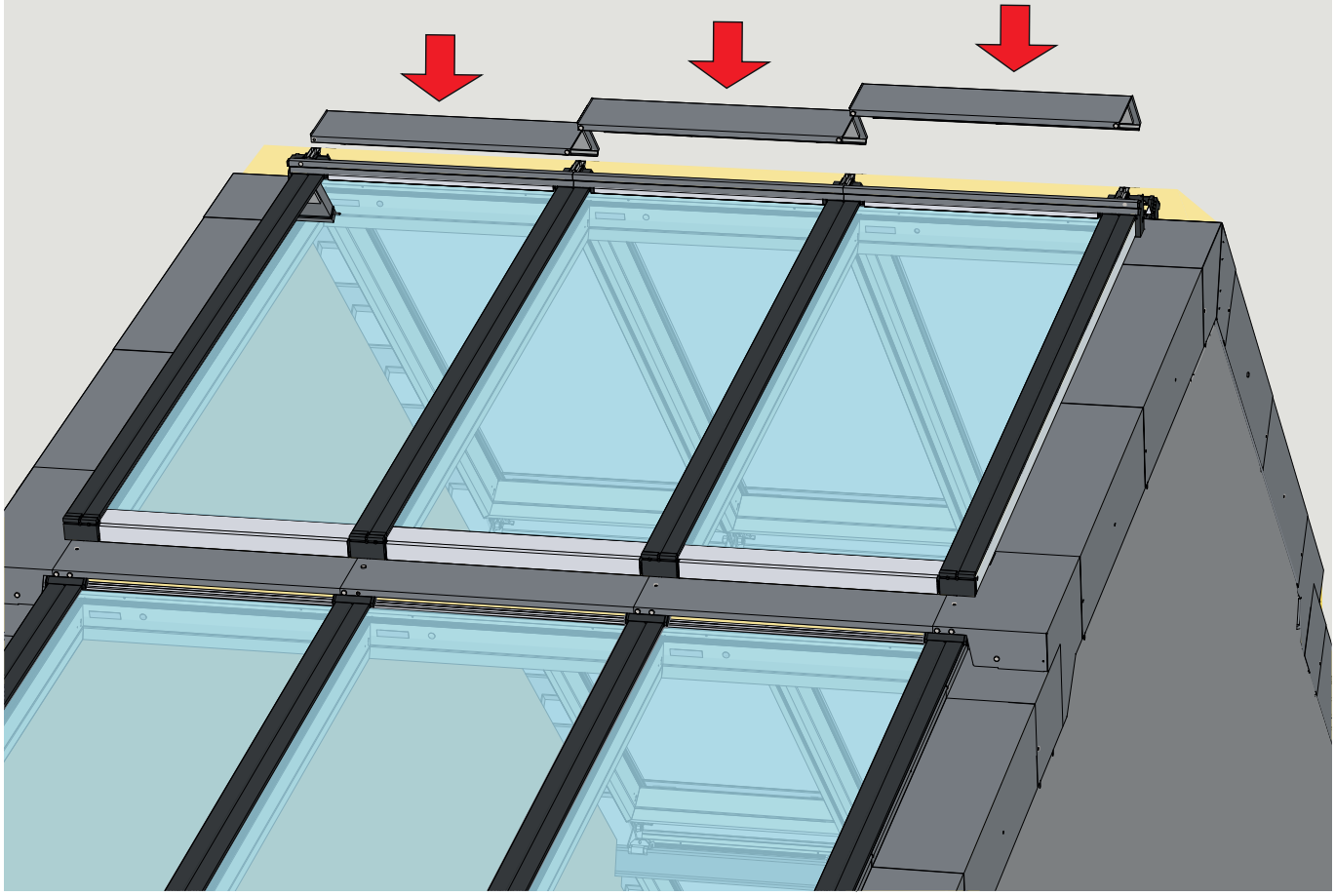

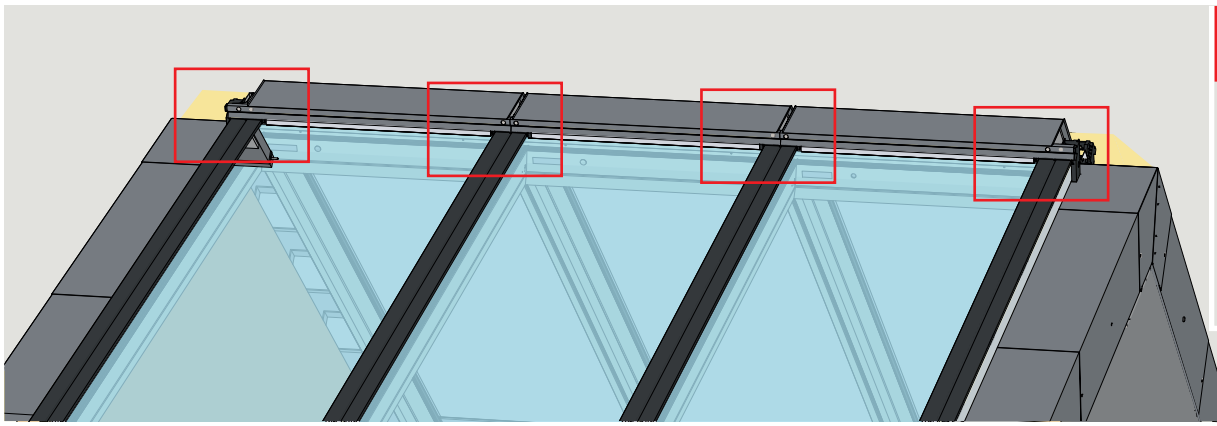

B1-R



5,5 x 27 mm

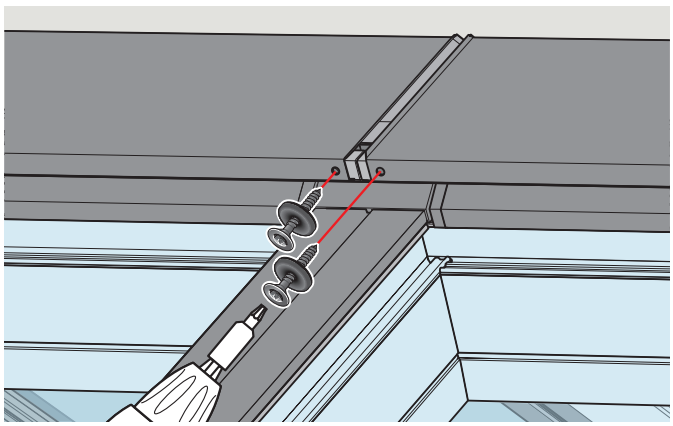

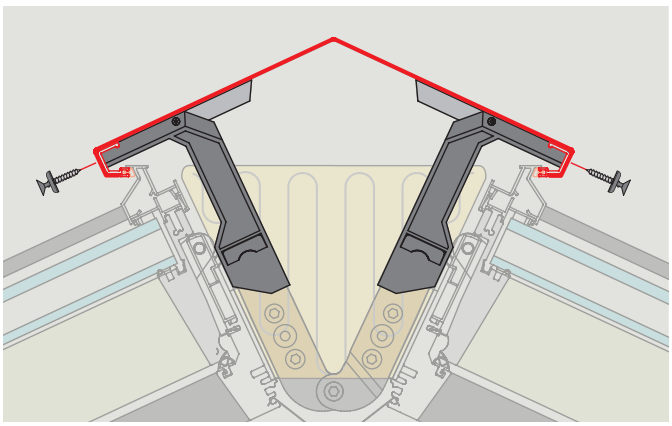

72

E1-R B1-R



5,5 x 27 mm

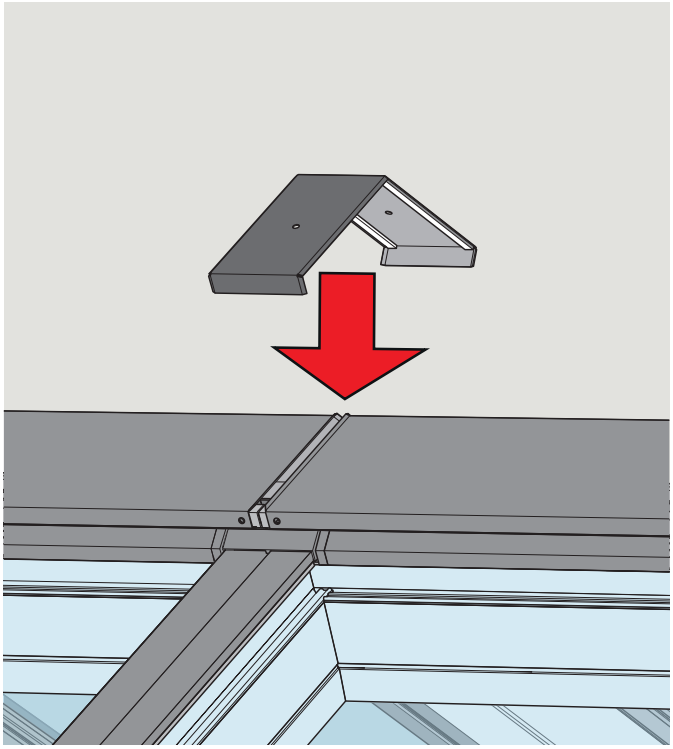

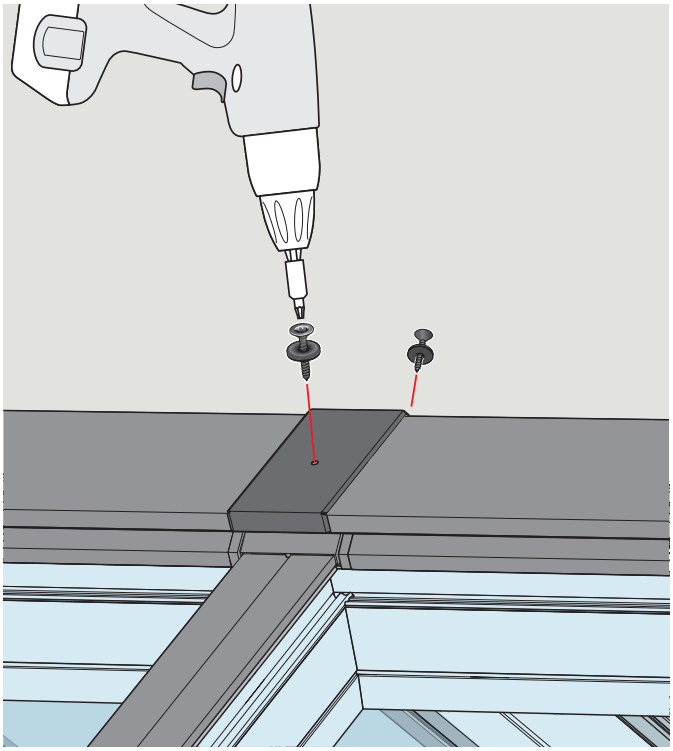

73

E2-R B2-R



5,5 x 27 mm

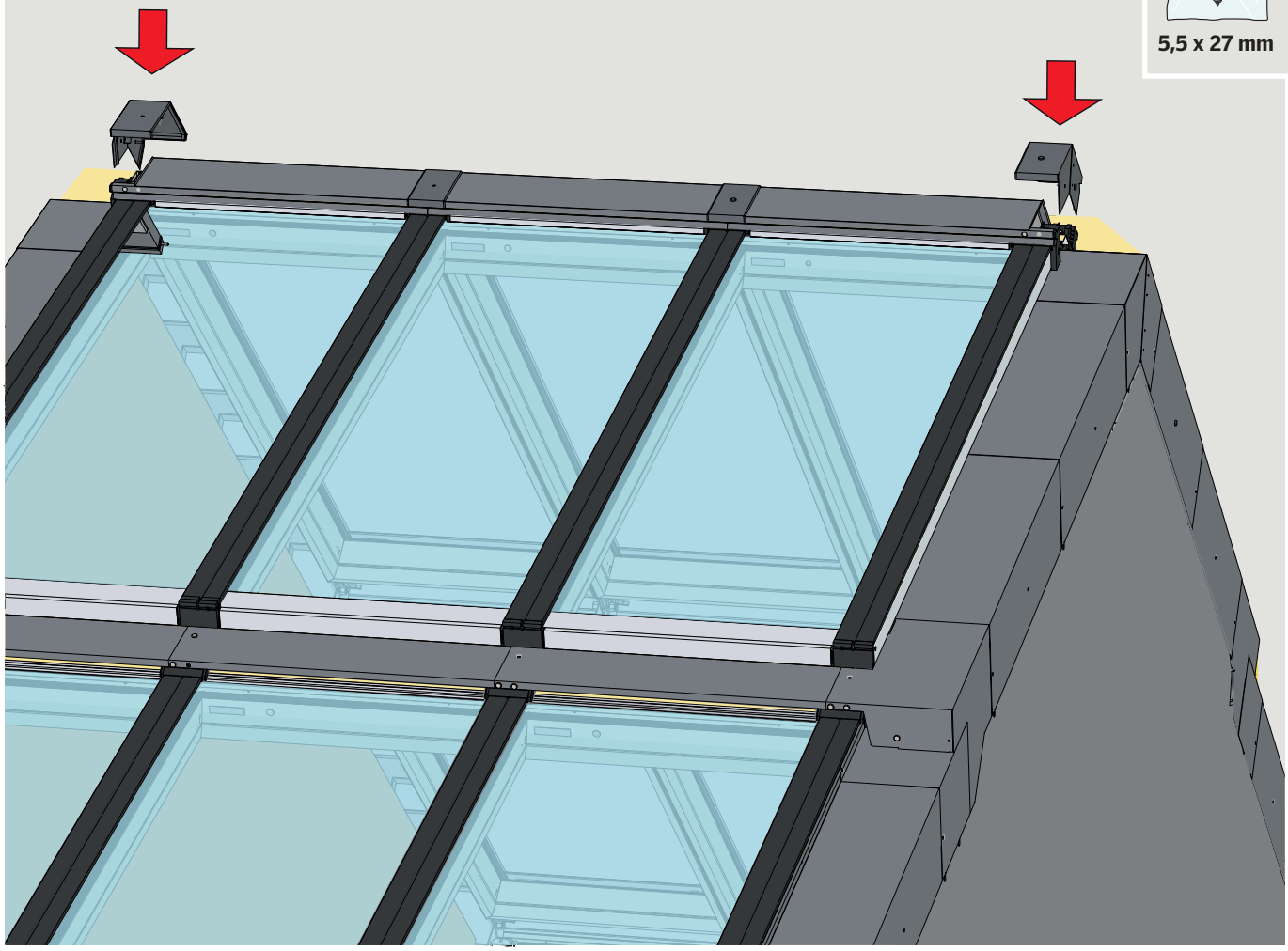

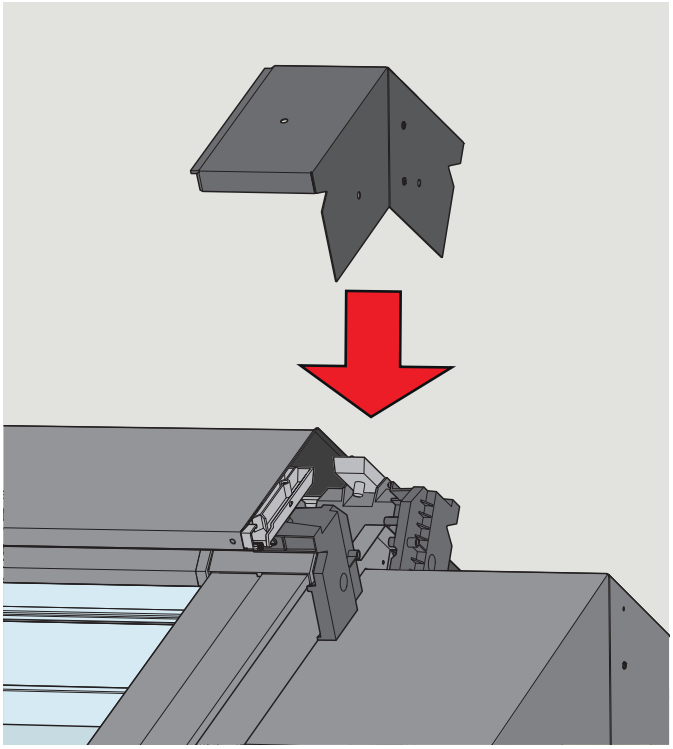

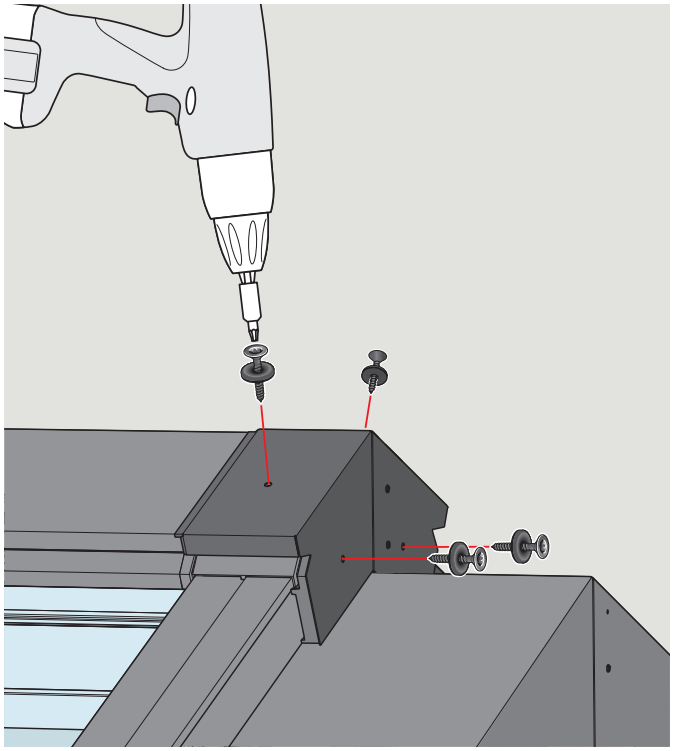

74

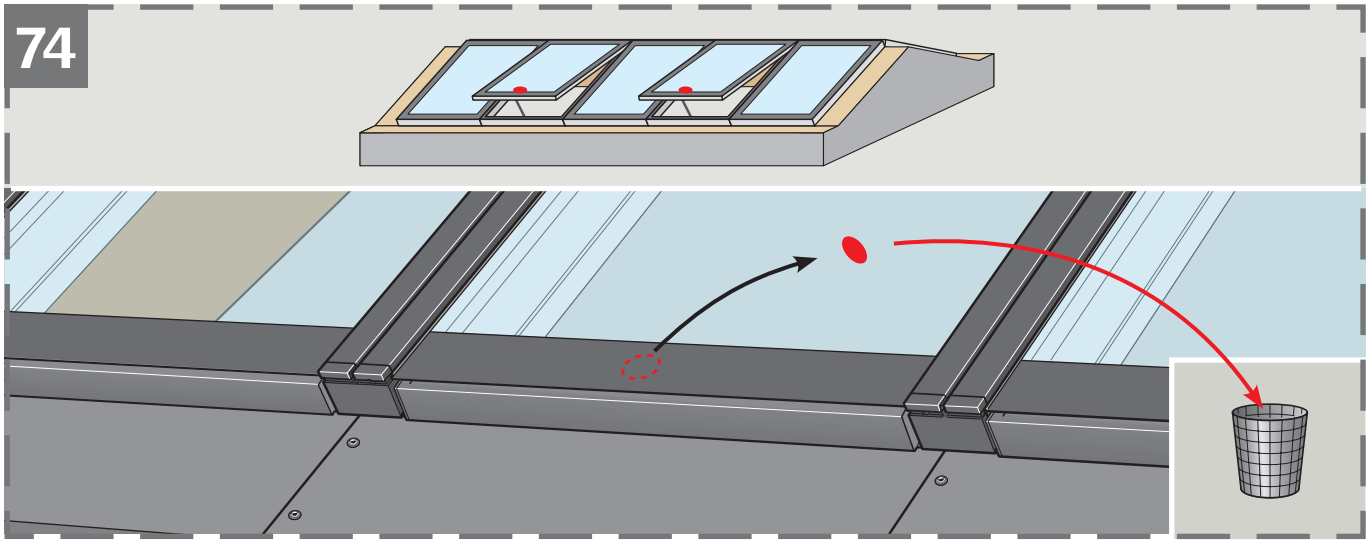

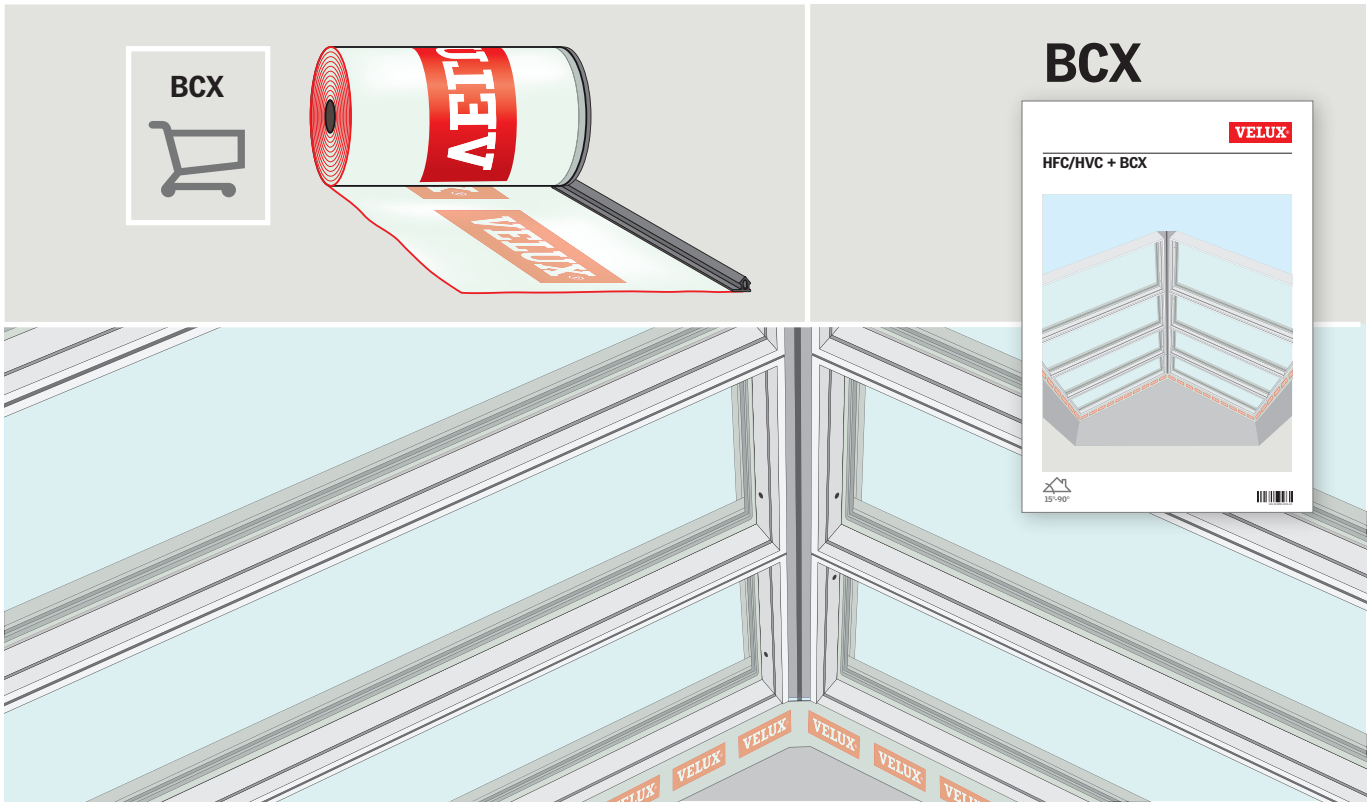
BCX
VELUX
BCX
VELUX
HFC/HVC + BCX
VELUX
VELUX
VELUX
VELUX
VELUX

VELUX®

Commercial

AT: VELUX Österreich GmbH
+43-720-1052-84

BE: VELUX Belgium
(+32) 010 42 09 91

CA: VELUX Canada Inc.
1 800 88 -VELUX (888-3589)

CH: VELUX Schweiz AG
+41 62 289 44 31

CR: VELUX Croatia
+49 5744 503-0

CZ: VELUX Česká republika, s.r.o.
+49 5744 503-0

DE: VELUX Deutschland GmbH
+49 5744 503-0

DK: VELUX Danmark A/S
+45 96771300

FR: VELUX France
01 64 54 24 69
Service gratuit + prix appel

GB: VELUX Company Ltd.
+44 (0) 1592 778916

HU: VELUX Magyarország Kft.
+49 5744 503-0

IE: VELUX Company Ltd.
+44 (0) 1592 778916

NL: VELUX Nederland B.V.
+31 226 366107

NO: VELUX Norge AS
+47 32 24 05 60

PL: VELUX Polska Sp. z o.o.
0048 61 640 34 10

RO: VELUX România S.R.L.
+40 31 860 2351

SE: VELUX Svenska AB
+45 96771300

SK: VELUX Slovensko, s.r.o.
+49 5744 503-0

US: VELUX America LLC
(888) 878-3589.

VELUXcommercial.com

INSTALLATION INSTRUCTIONS FOR VELUX MODULAR SKYLIGHT - HFC/HVC + EWC. ©2022 VELUX GROUP ®VELUX AND THE VELUX LOGO ARE REGISTERED TRADEMARKS USED UNDER LICENCE BY THE VELUX GROUP