VELUX®

VELUX ODL

for Viridian Solar Clearline fusion

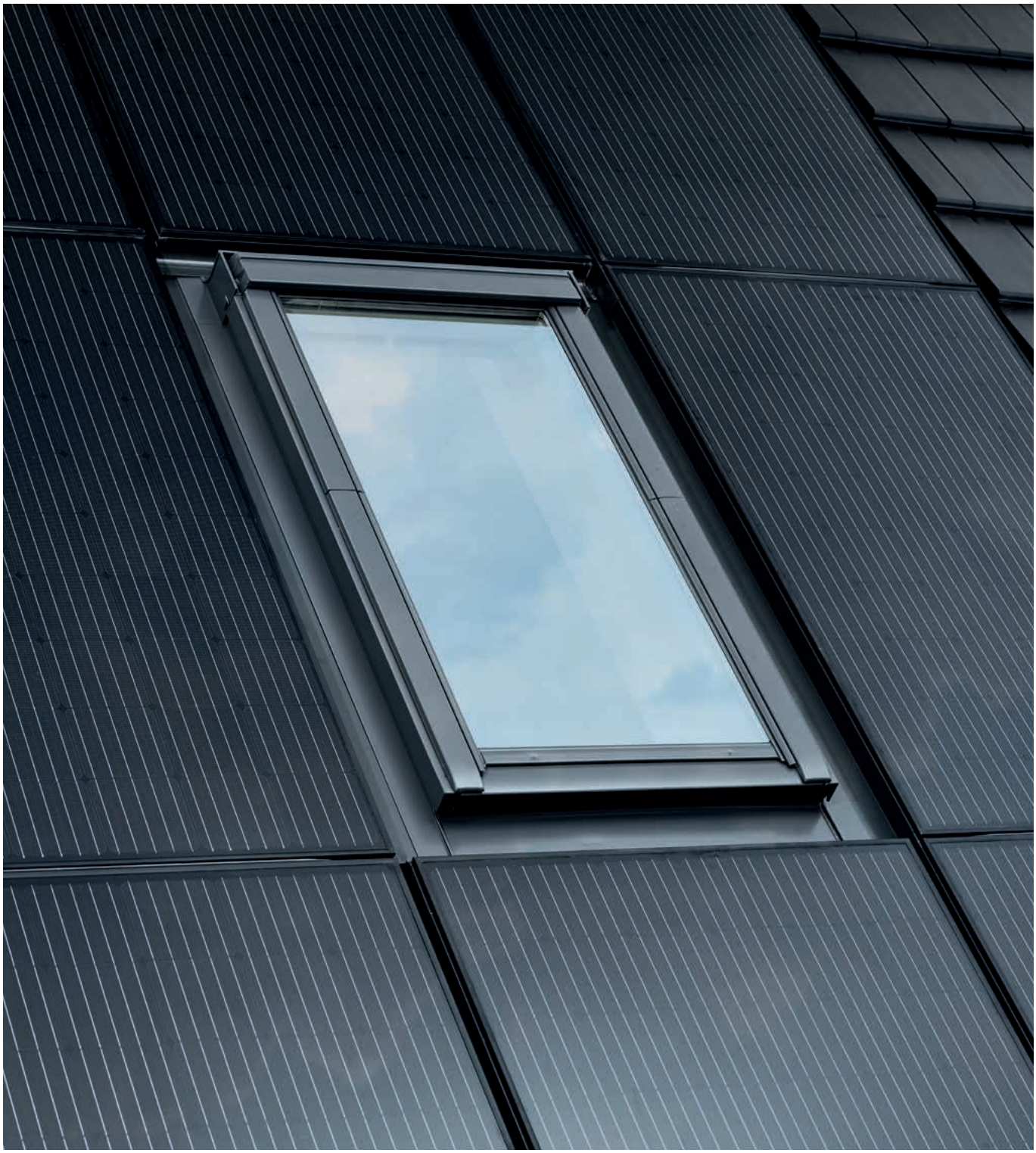

20°–60°

VAS 454569-2026-01



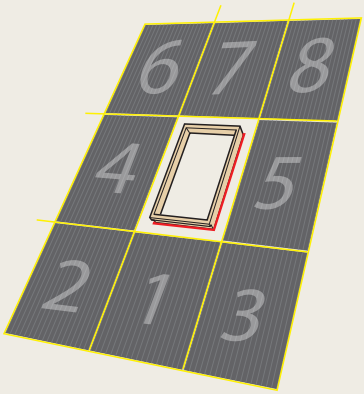

Page 4



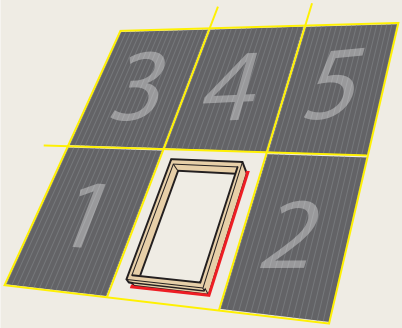

Page 24



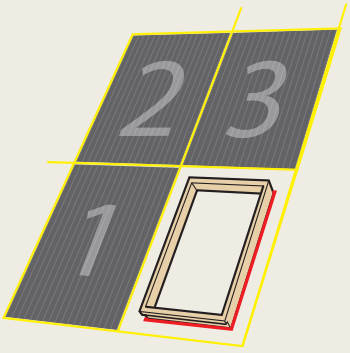

Page 29



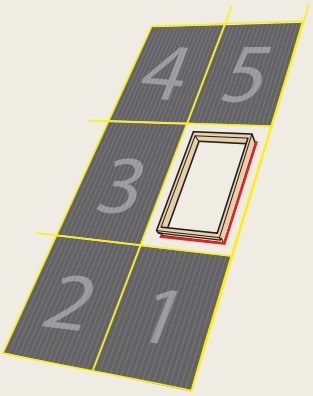

Page 37

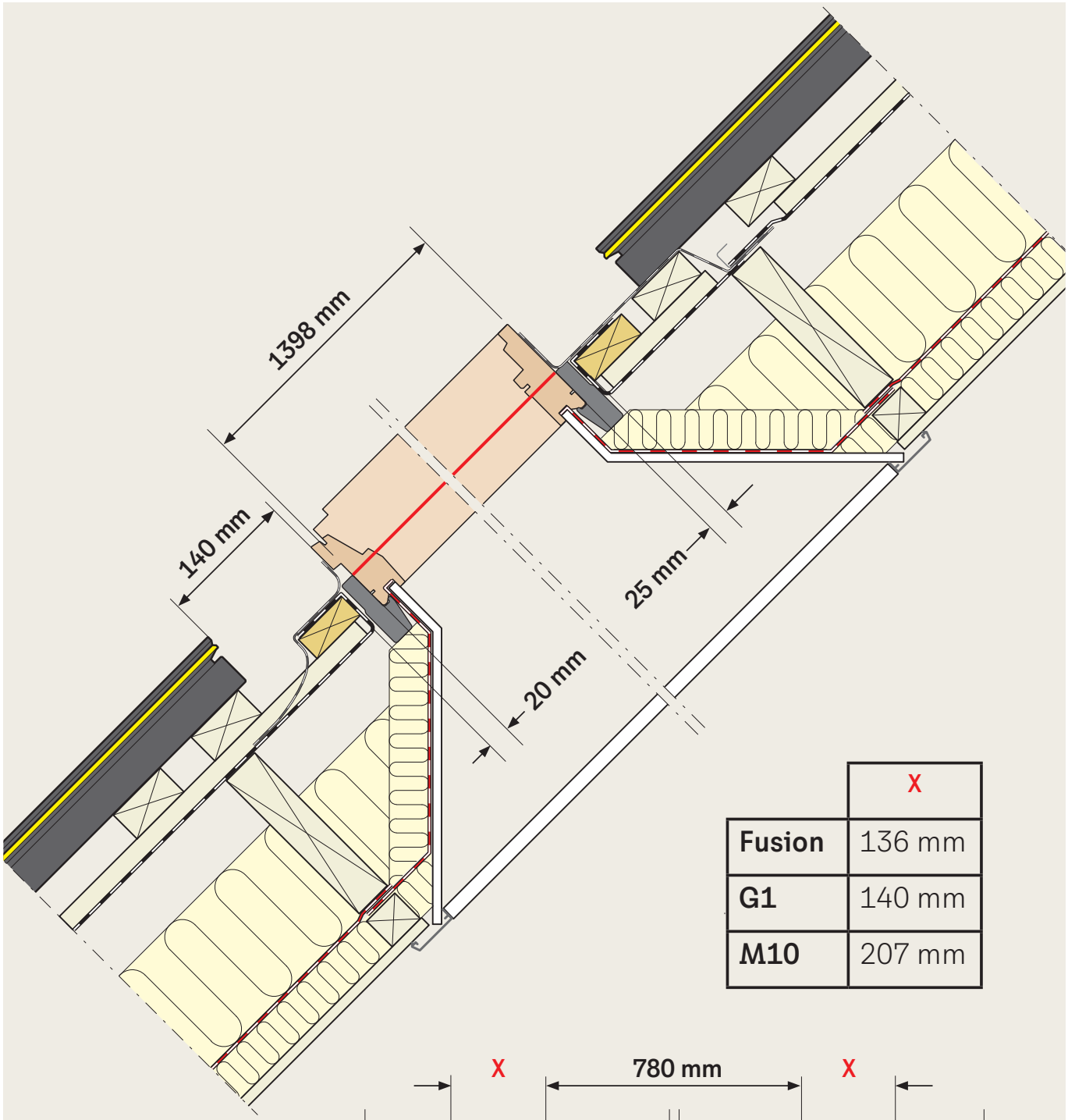

	X
Fusion	136 mm
G1	140 mm
M10	207 mm

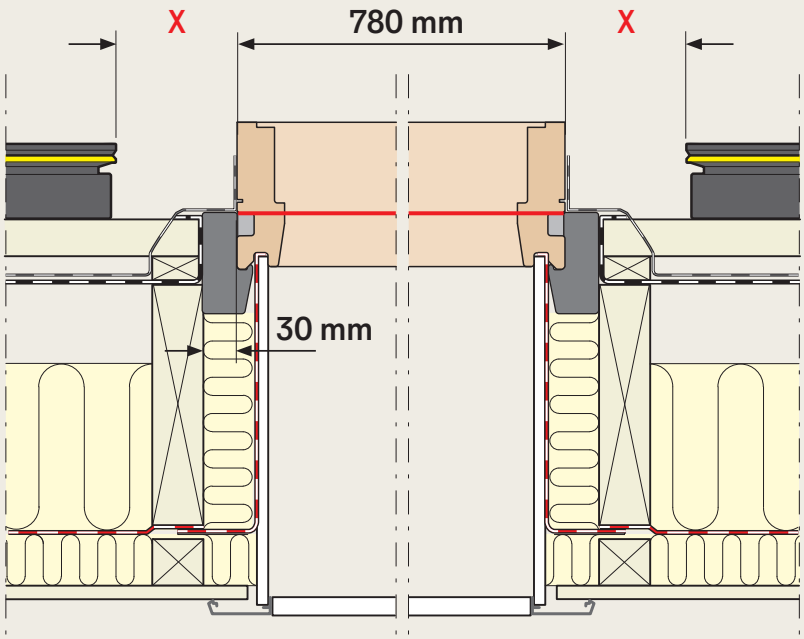



	W
Fusion	992 mm
G1	1000 mm
M10	1134 mm

	H
Fusion	1640 mm
G1	1686 mm
M10	1722 mm

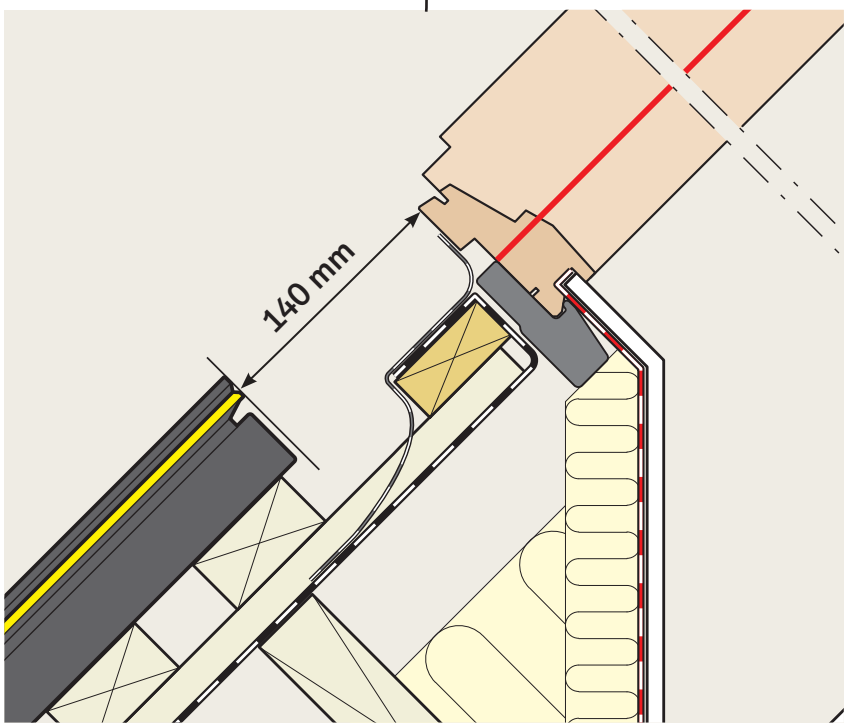

	X
Fusion	136 mm
G1	140 mm
M10	207 mm

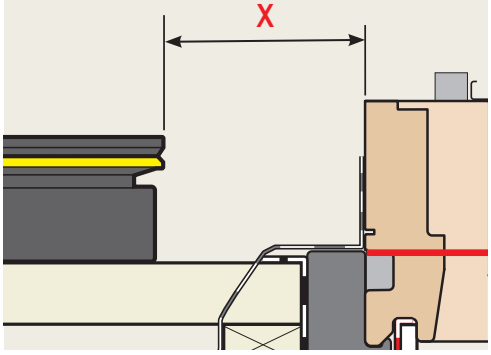

G-- MK08

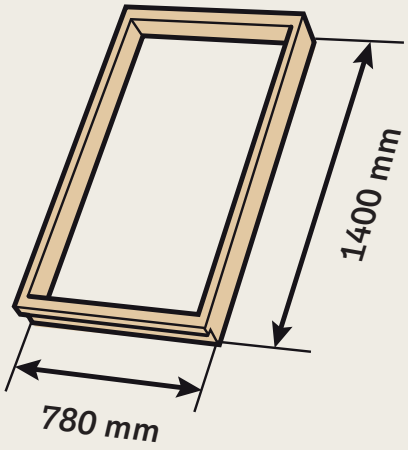

VIRIDIAN PV16

	H
Fusion	1640 mm
G1	1686 mm
M10	1722 mm

	W
Fusion	992 mm
G1	1000 mm
M10	1134 mm

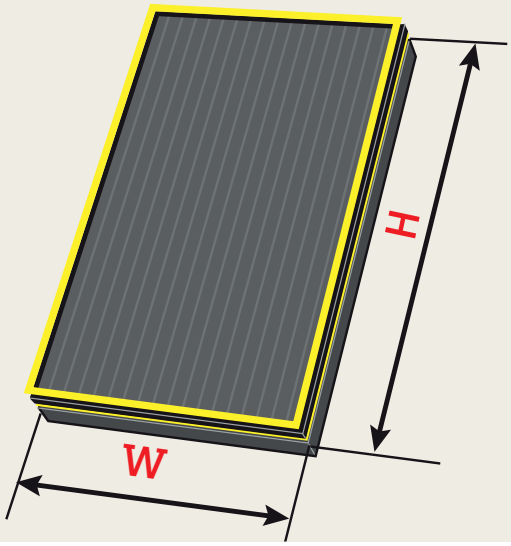

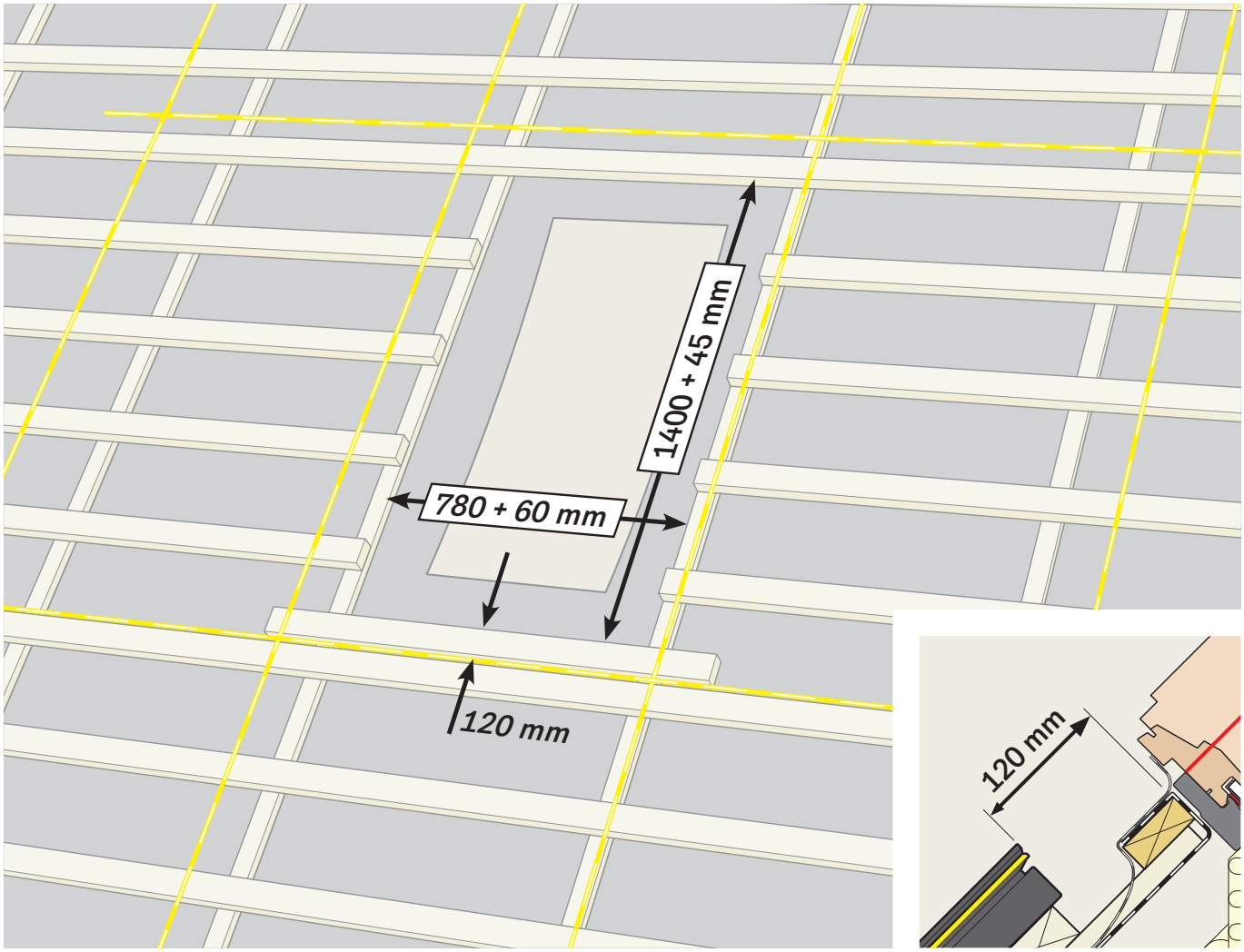

1

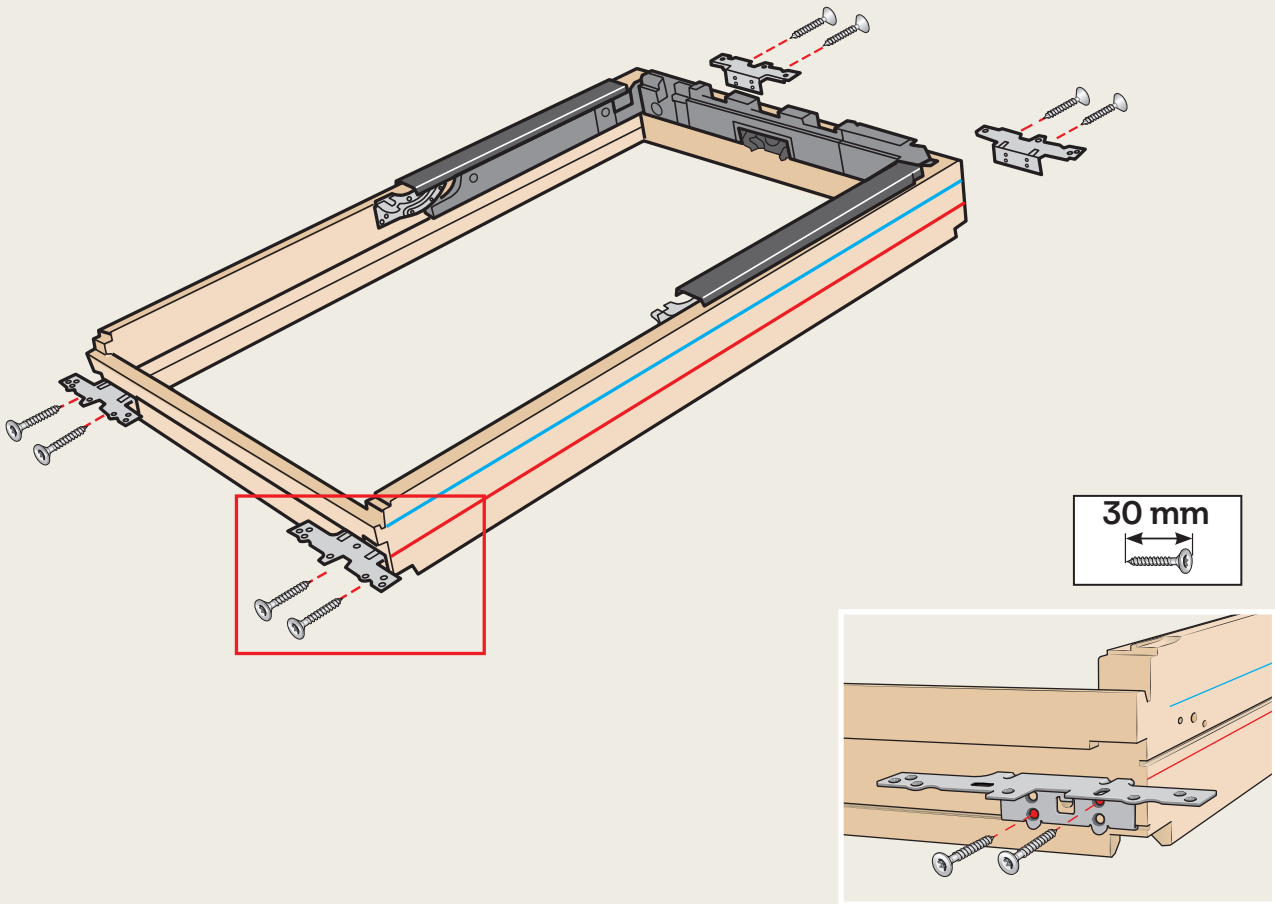

2

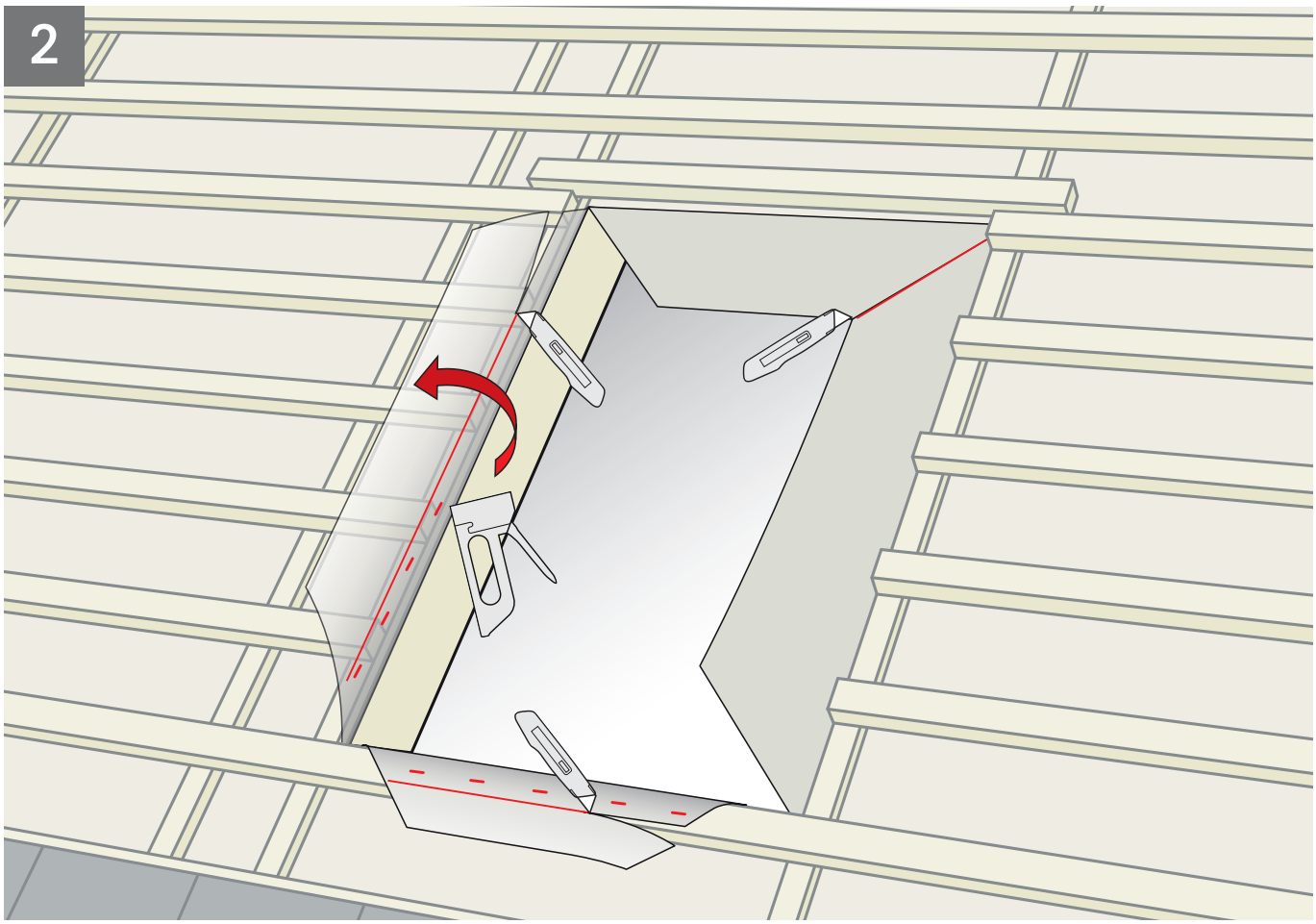

3

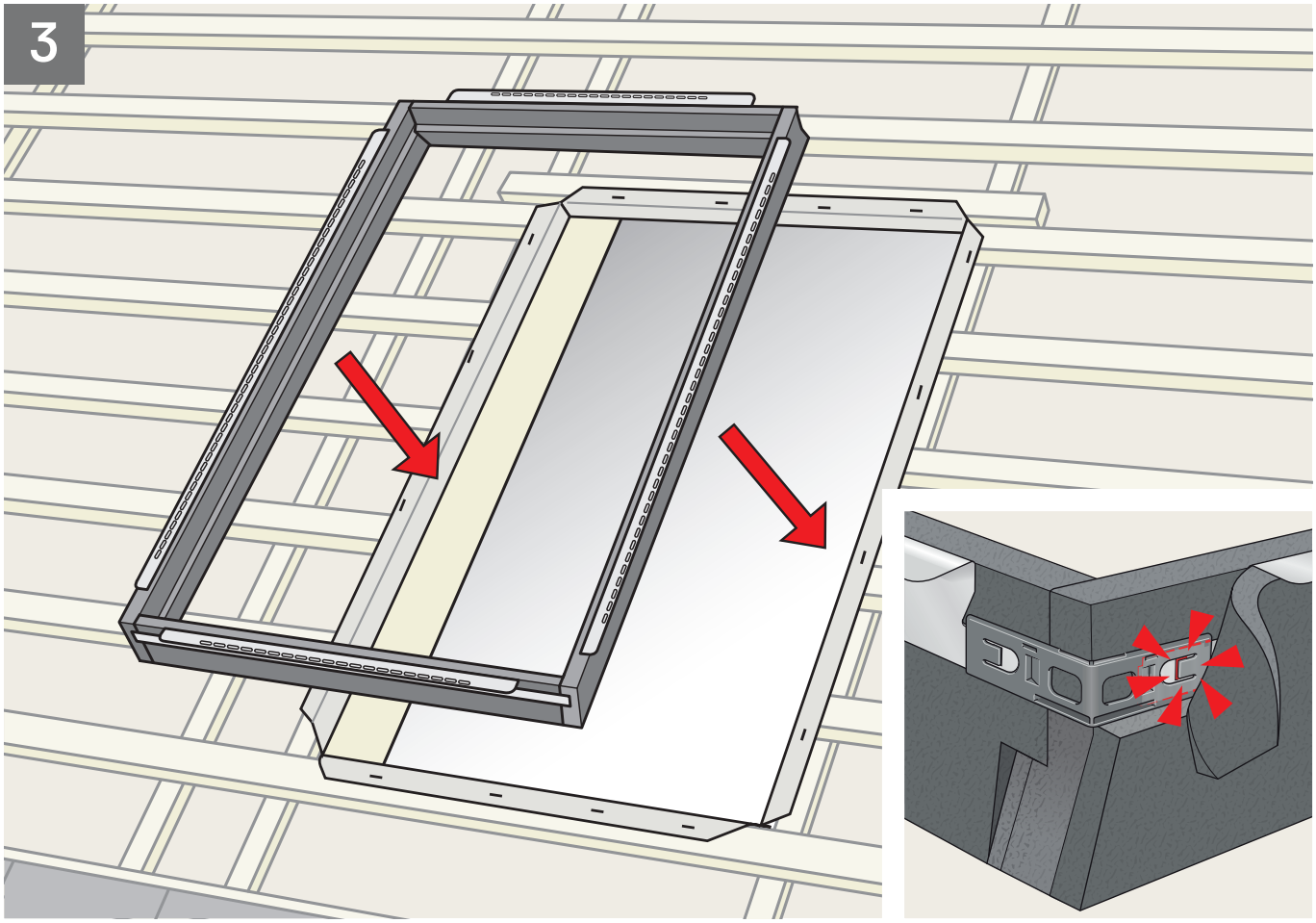

4

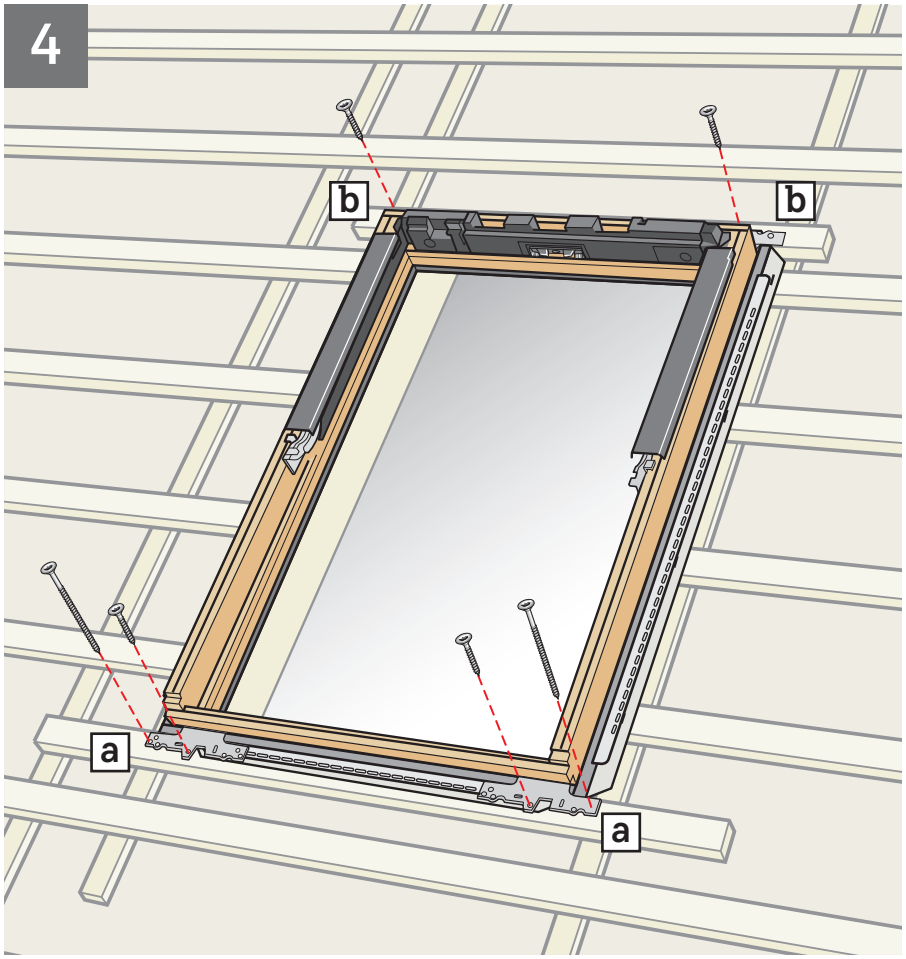

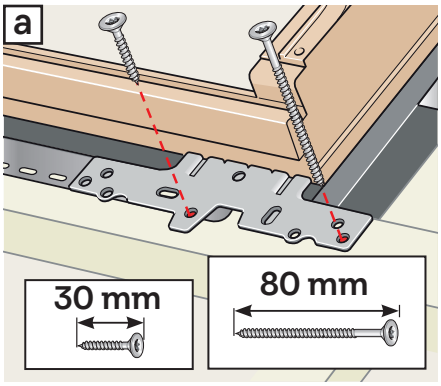

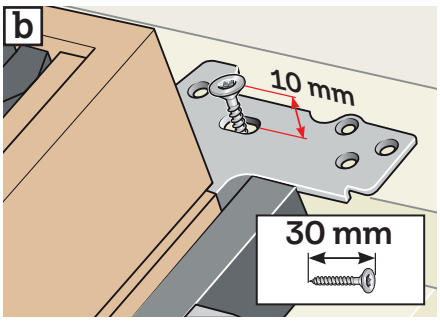

5

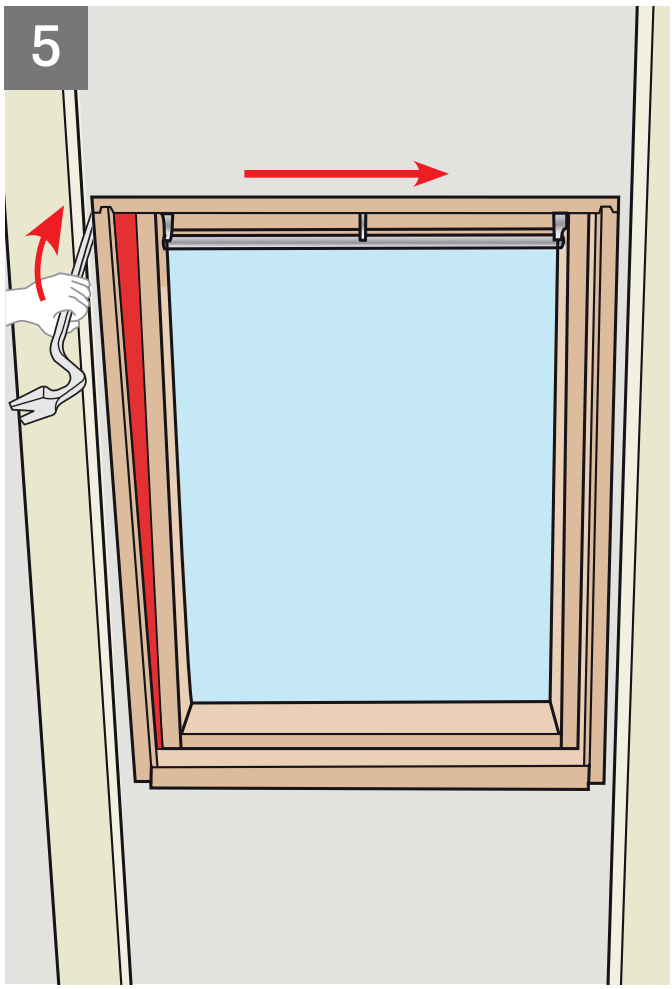

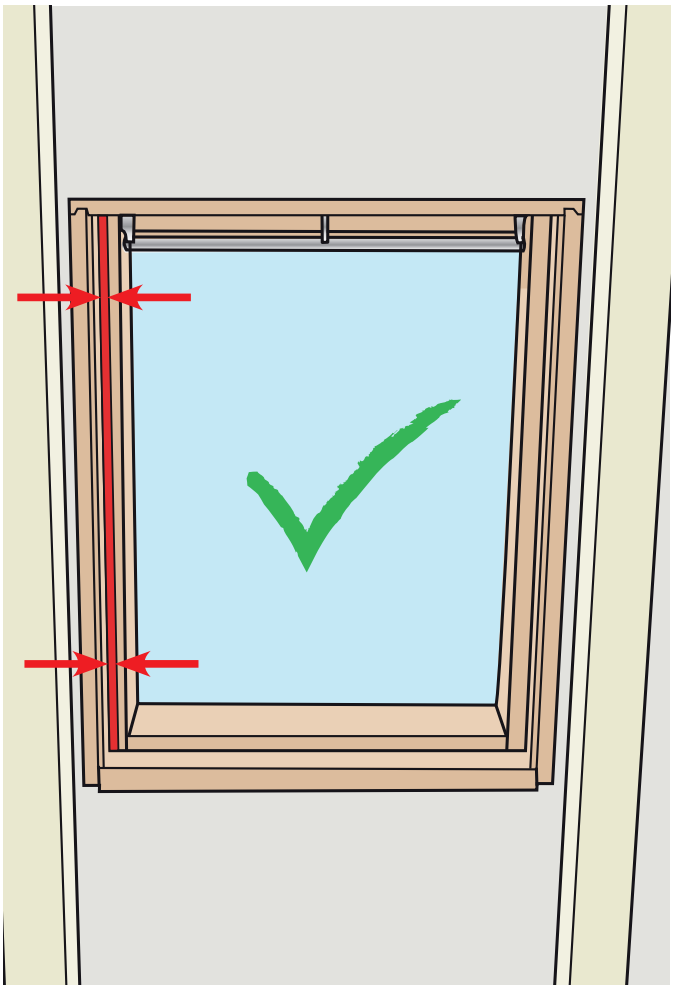

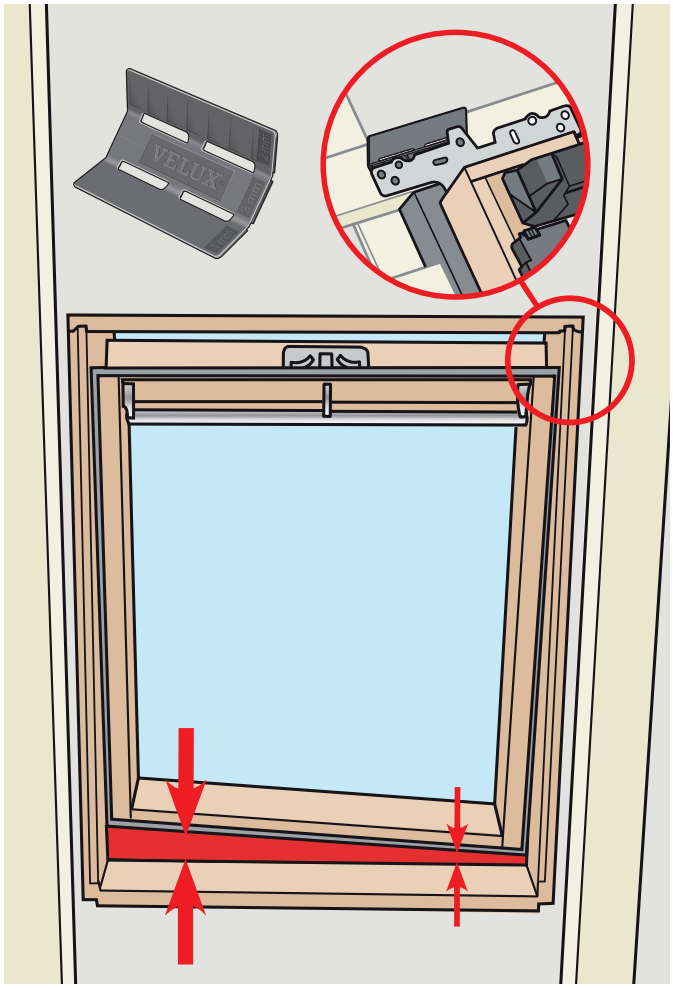

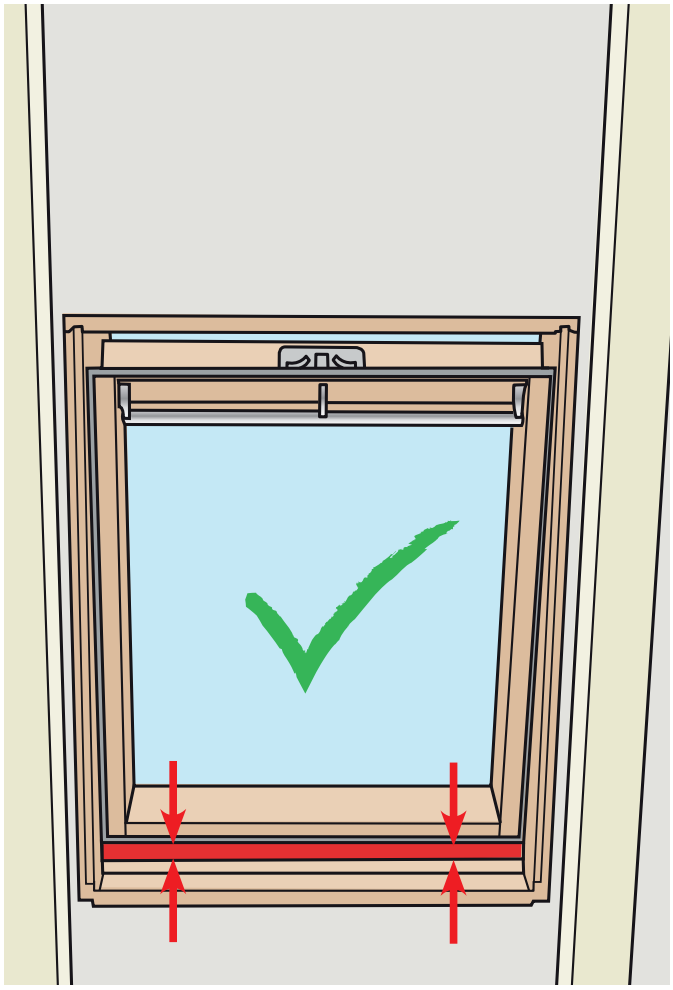

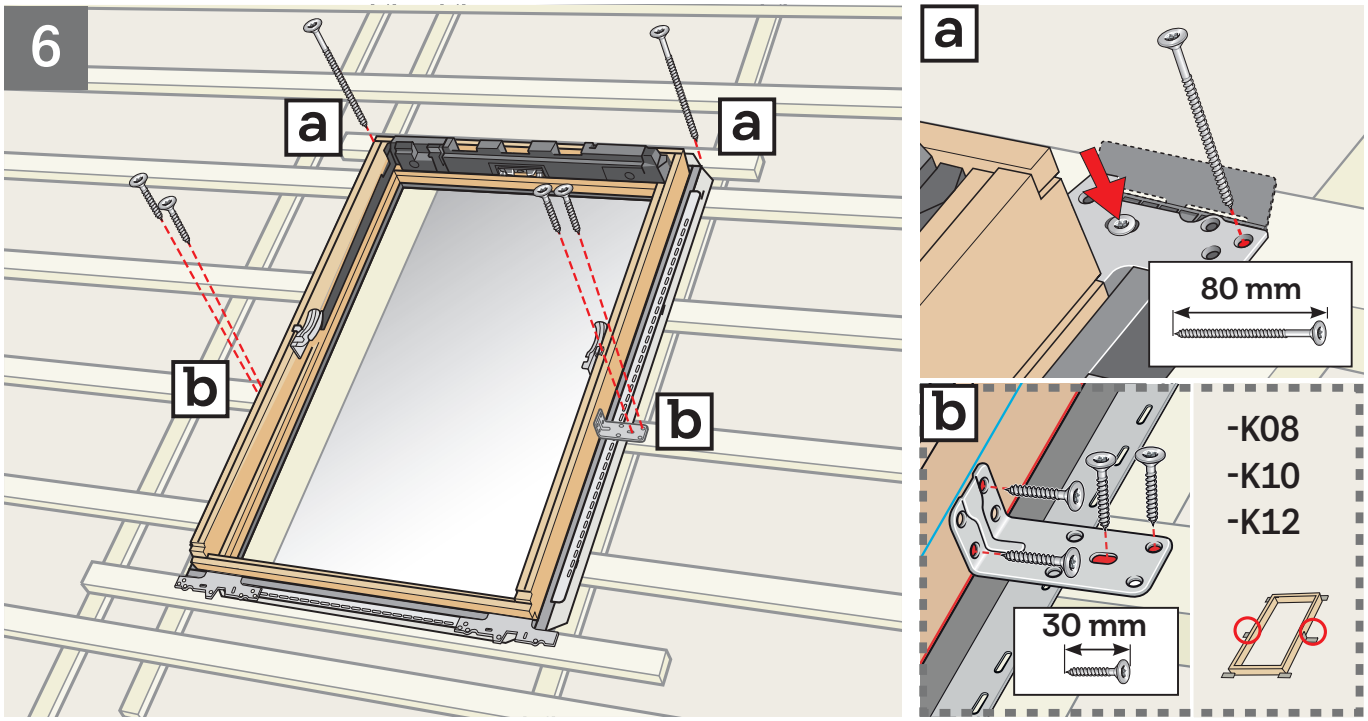
6
a
a
b
b
a
80 mm
b
30 mm
-K08
-K10
-K12

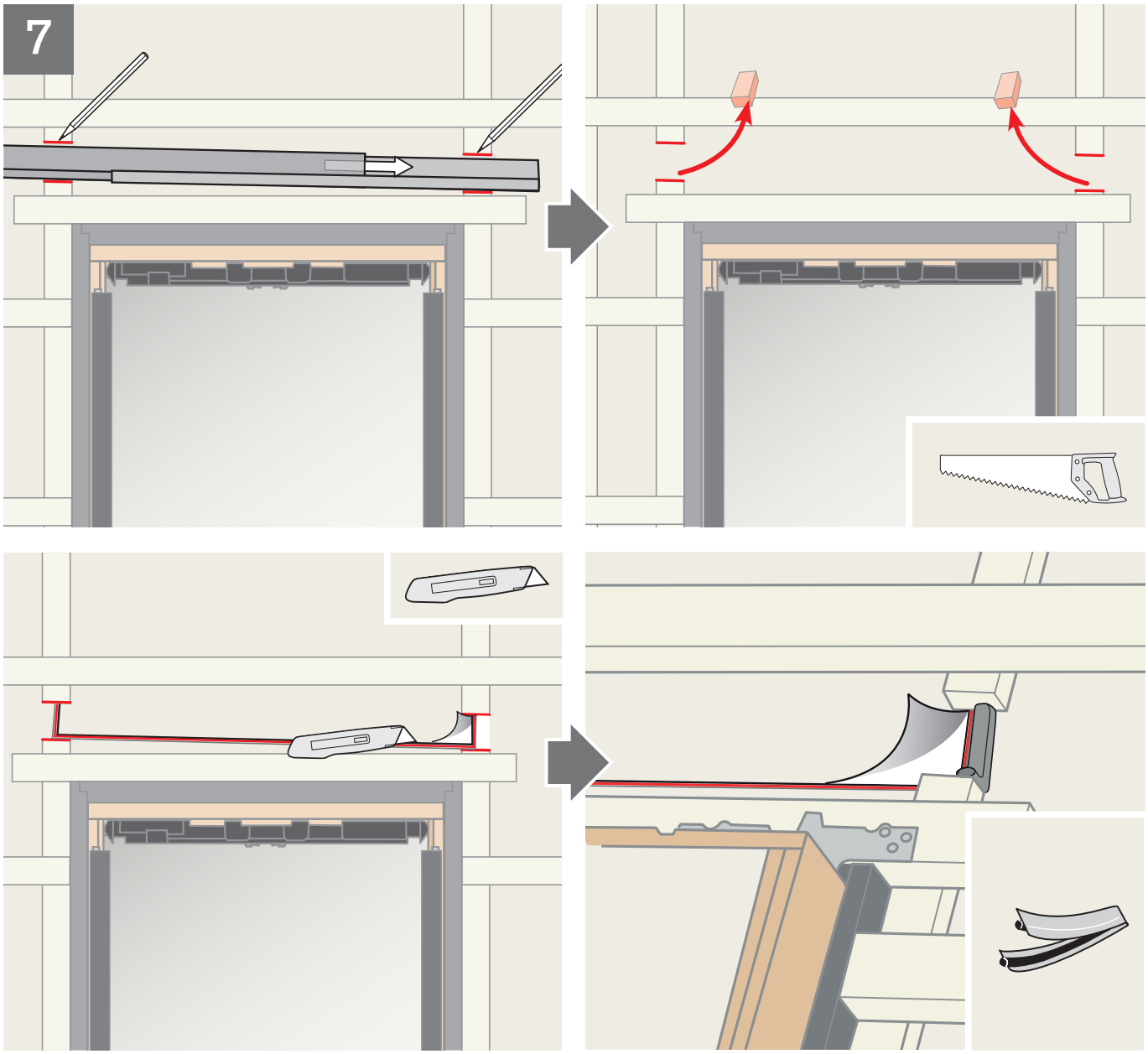
7

8

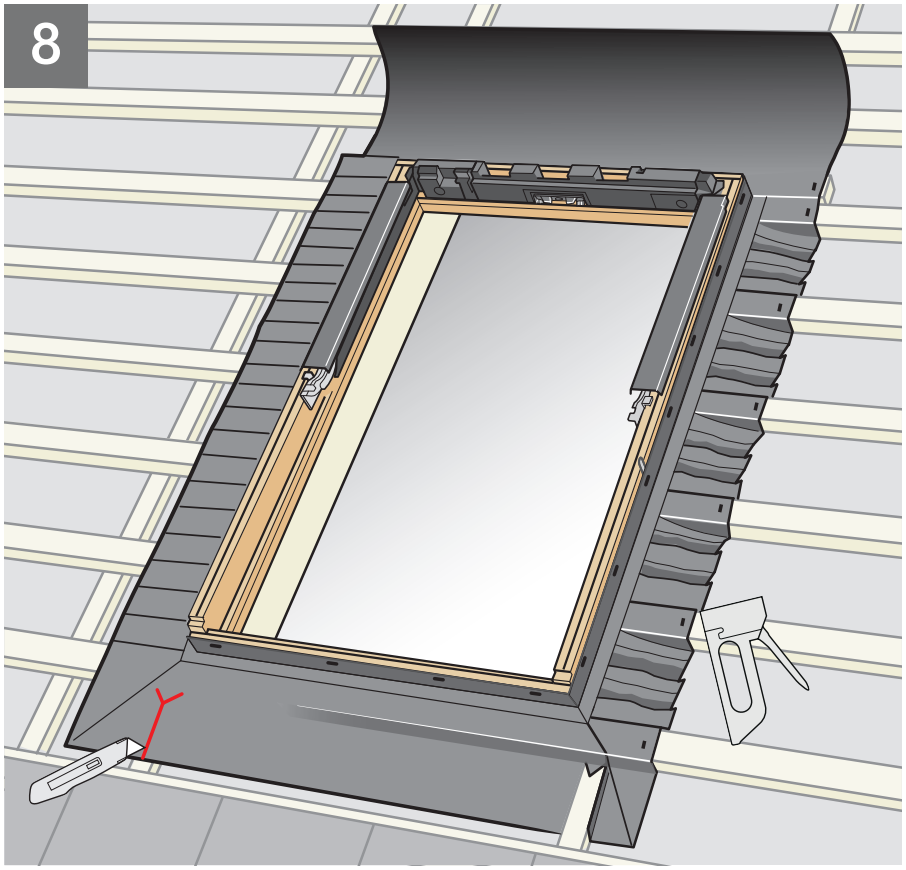

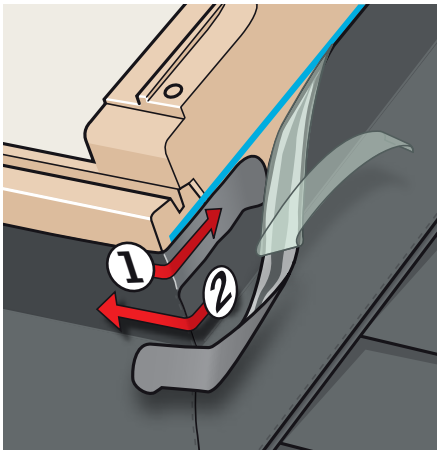

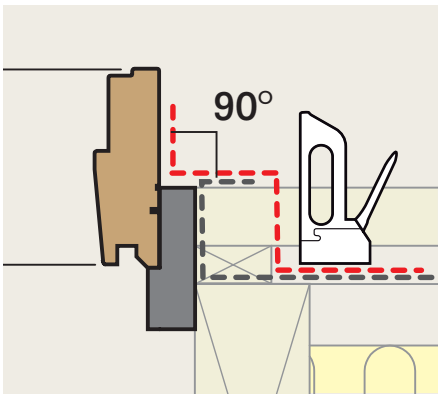

9

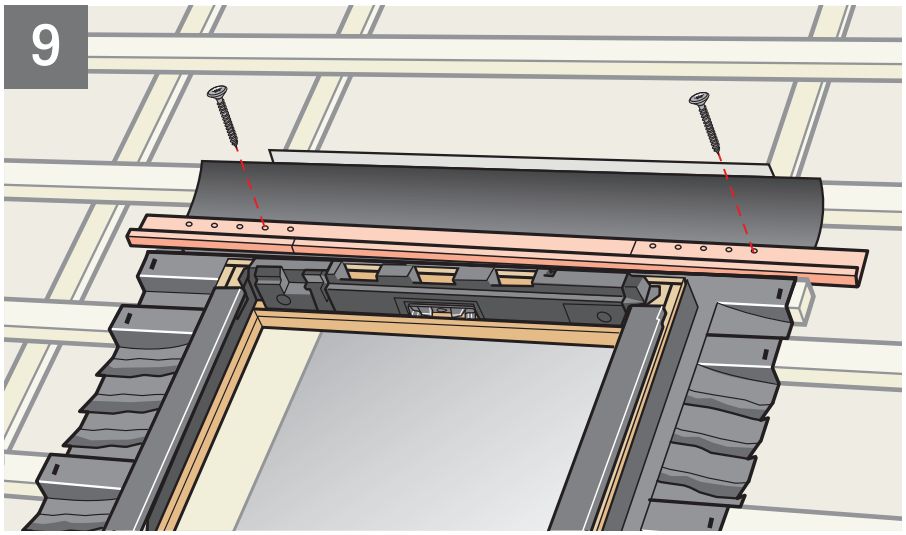

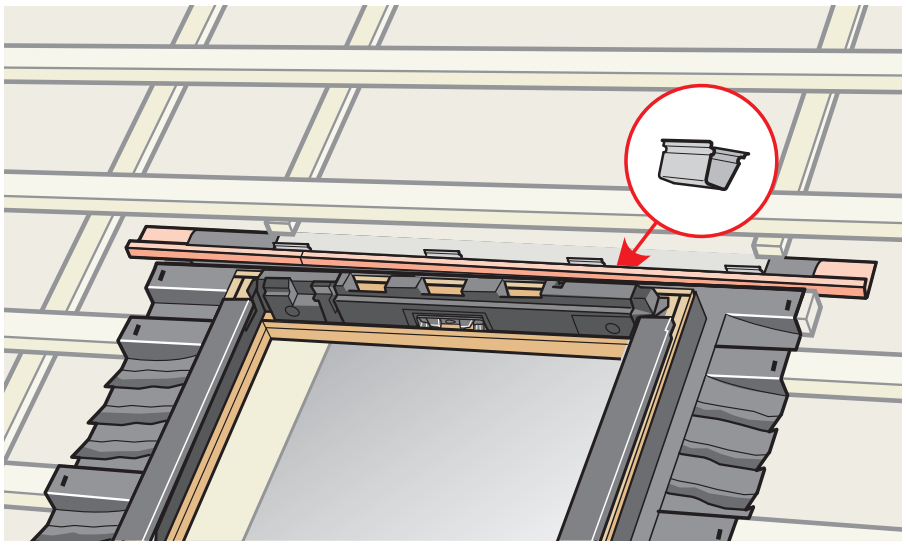

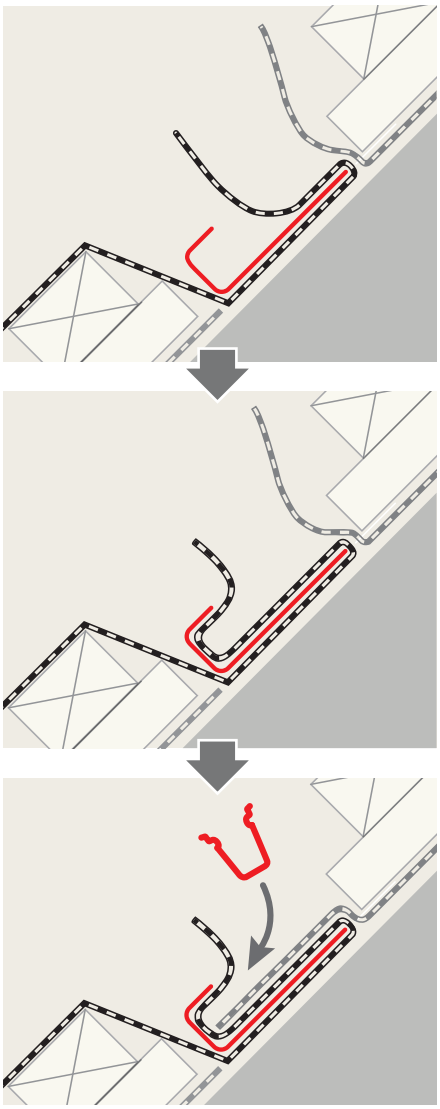


VELUX
ODL

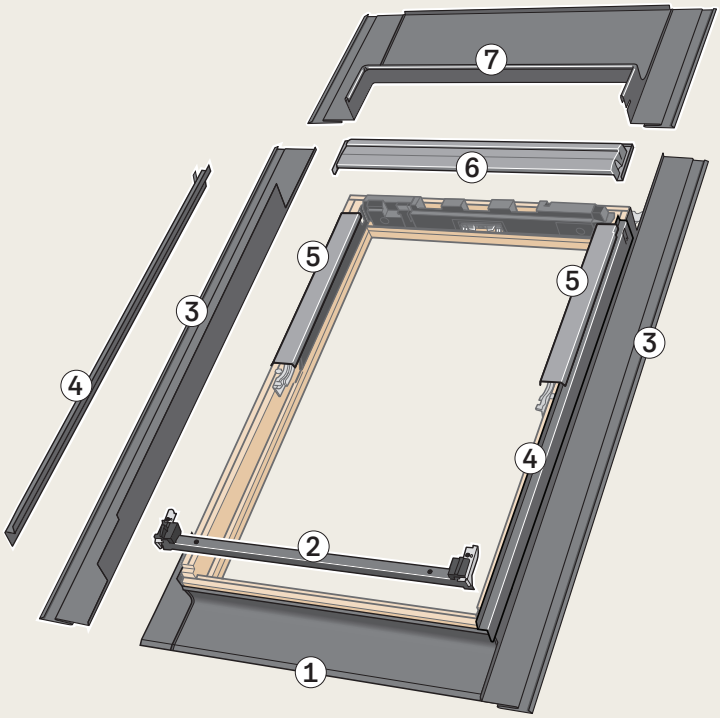
7
6
5
5
3
3
4
4
2
1


viridian
F16-VC


Installation
VELUX ODL

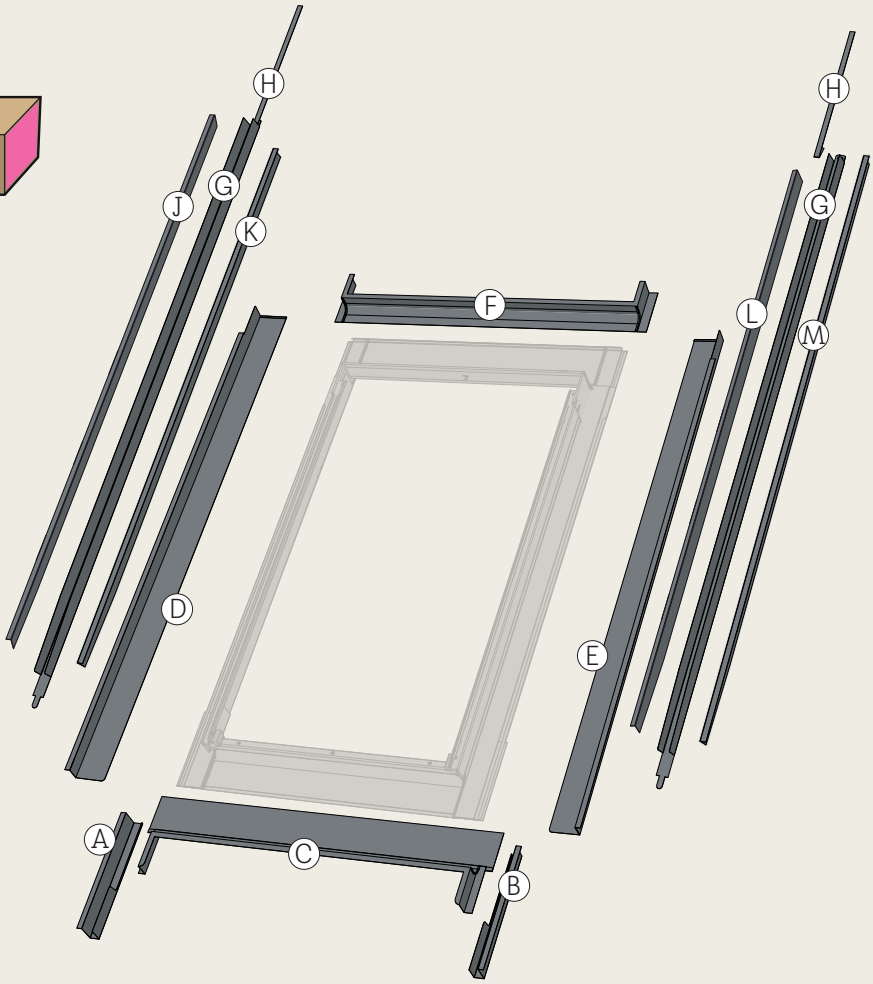
H
J
G
K
F
D
A
C
B
H
G
L
M
E


viridian
F16-TC
F16-TR
F16-TY



10



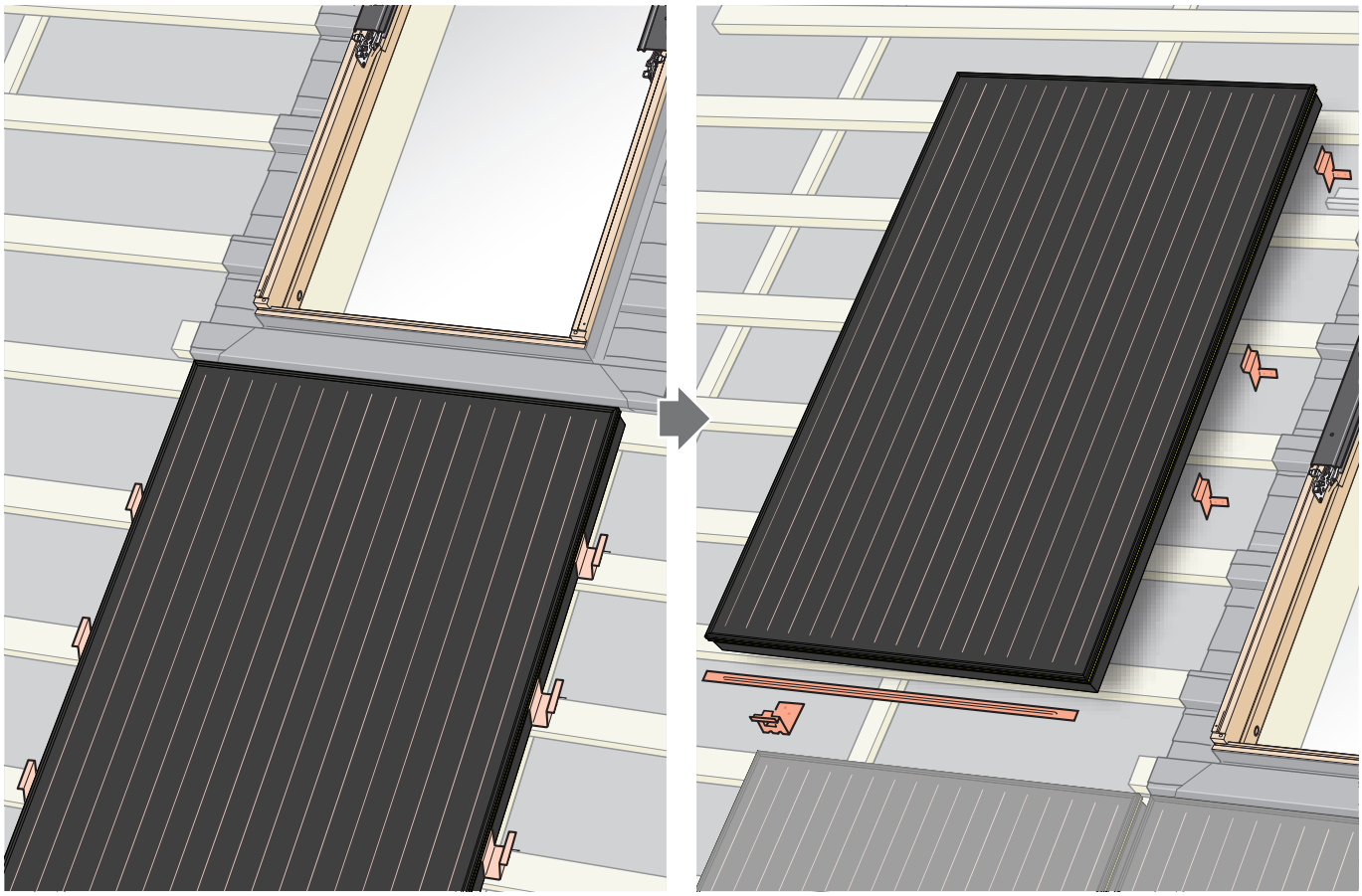

11

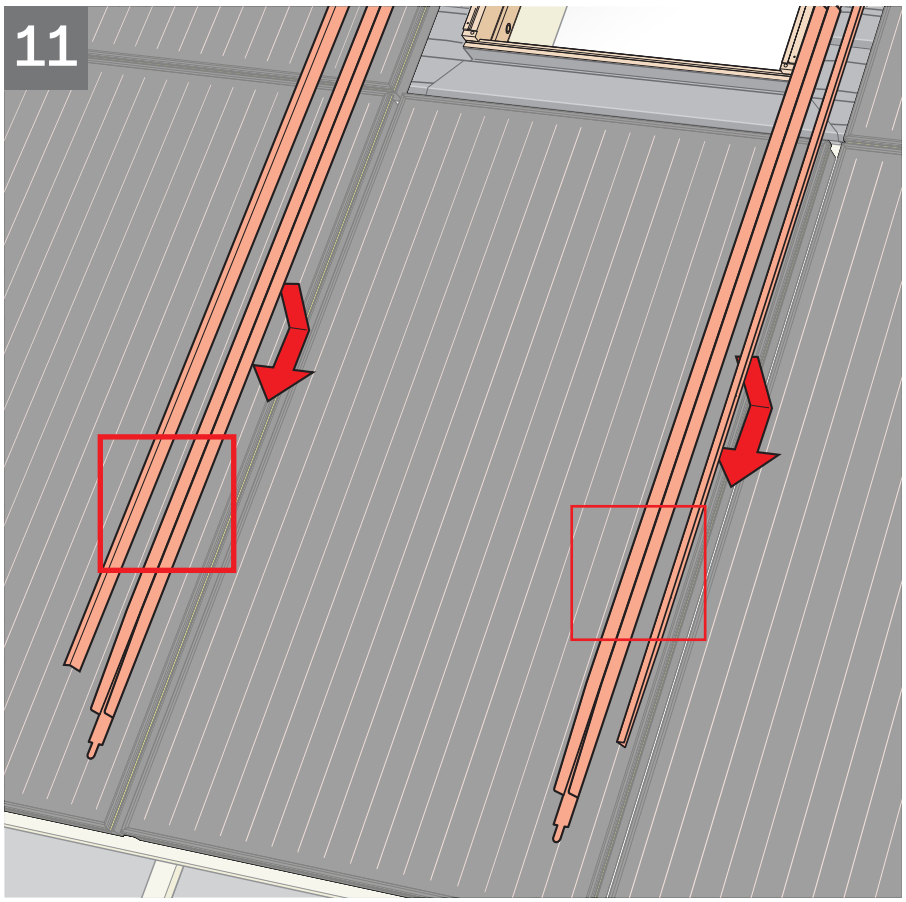

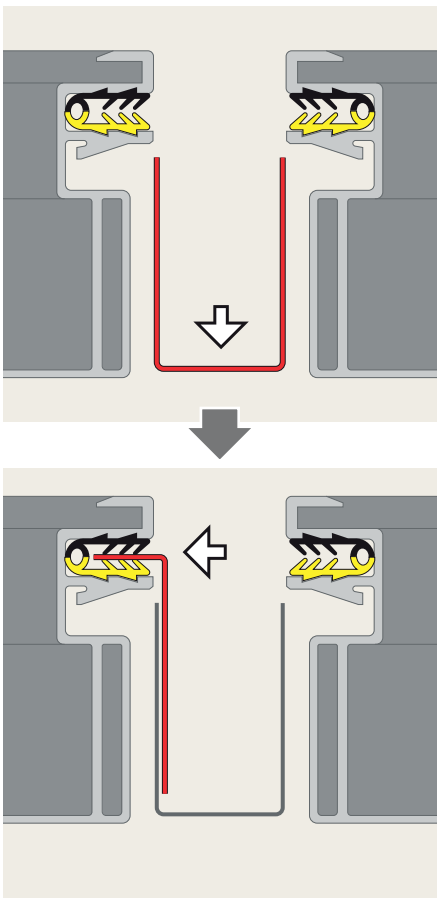

12



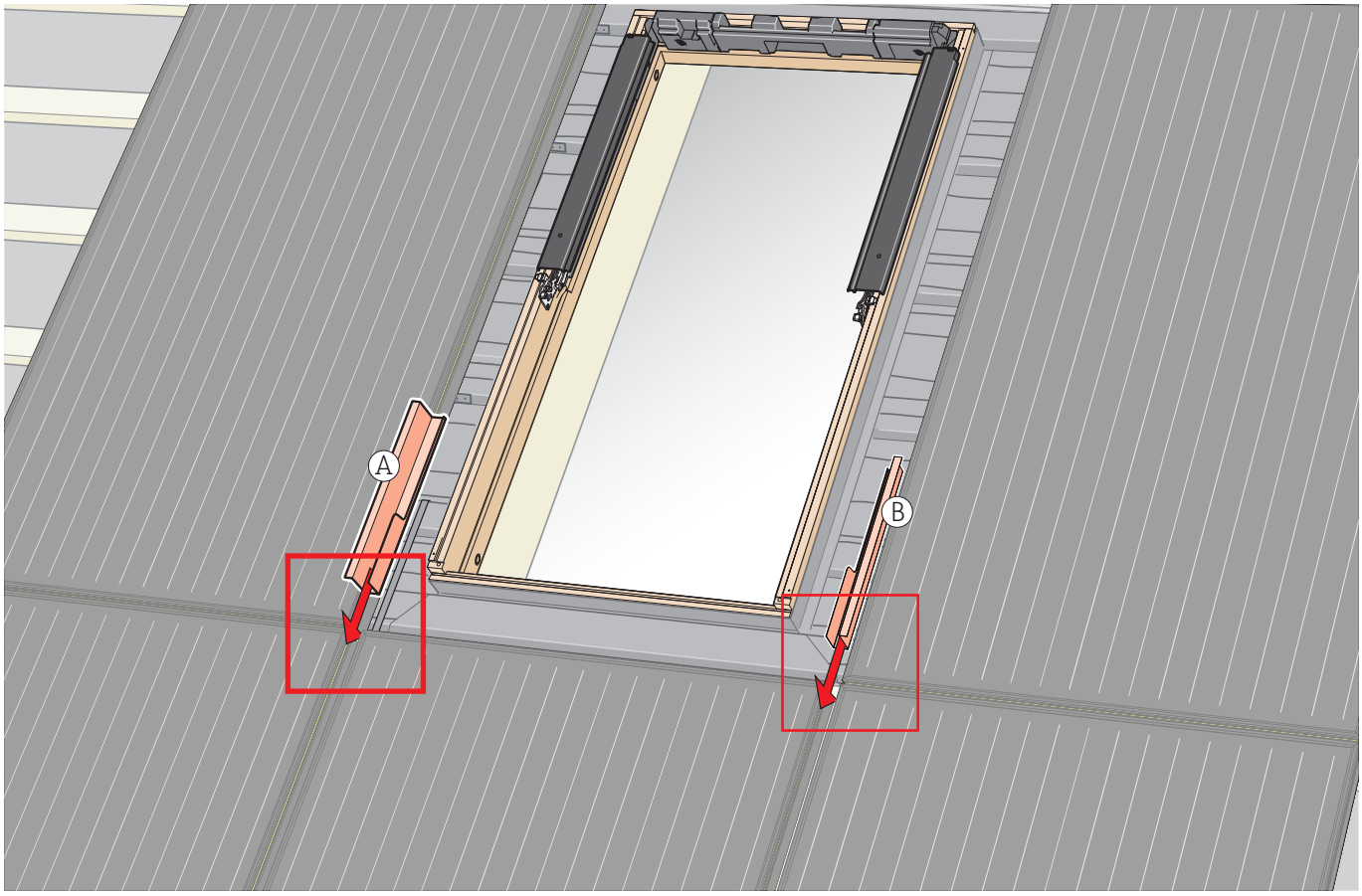

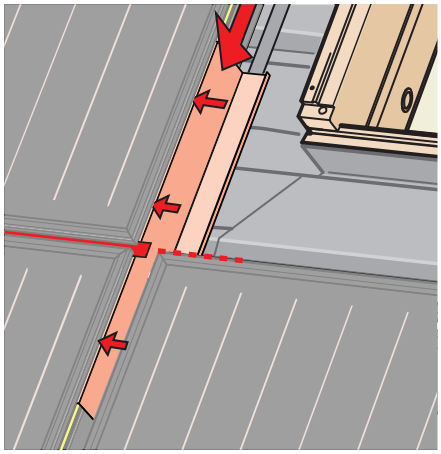



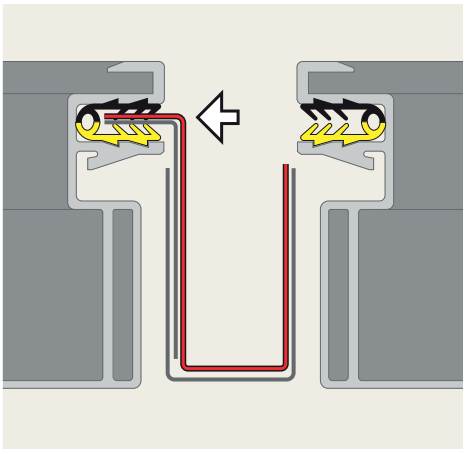

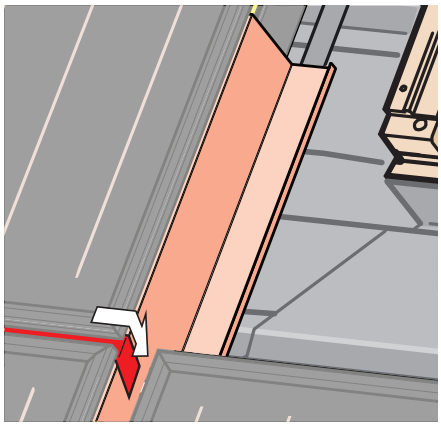

13



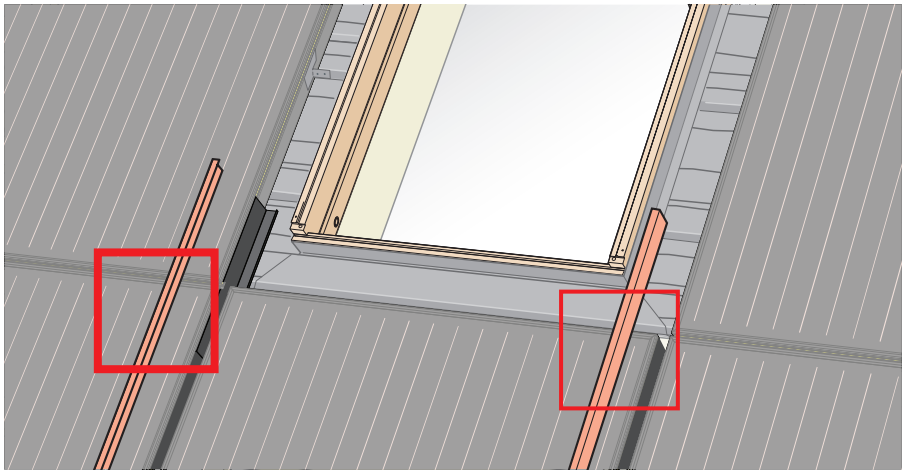

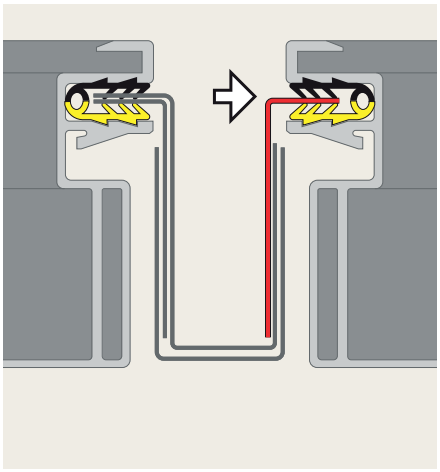

14



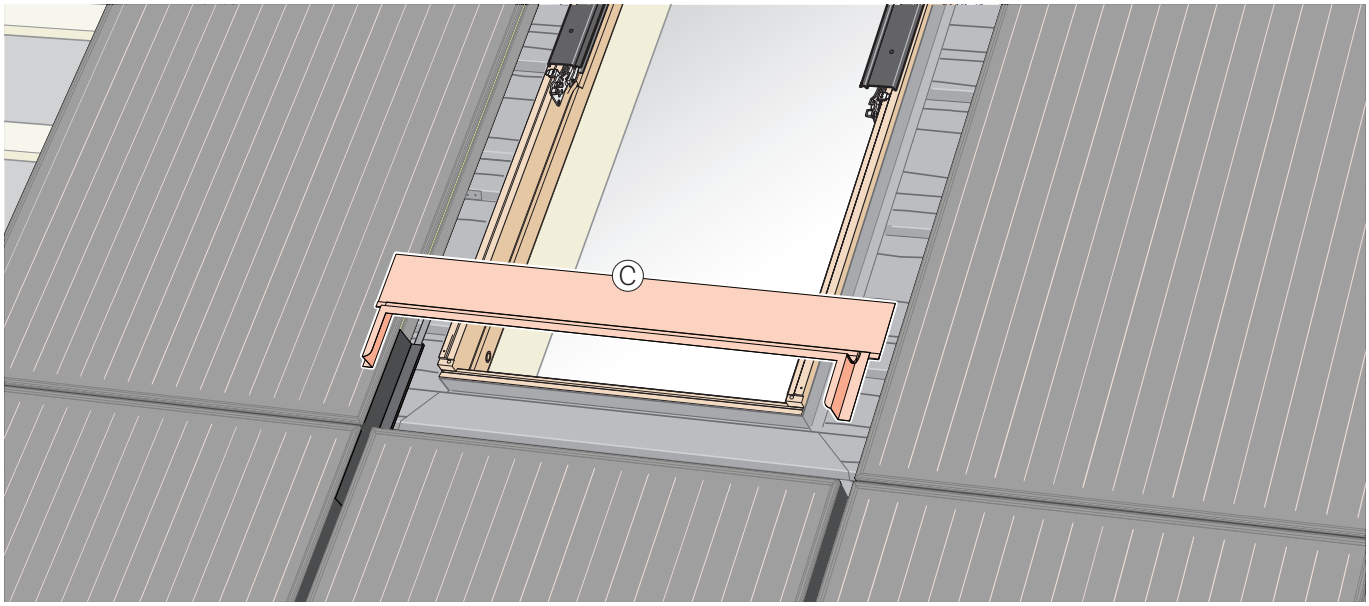

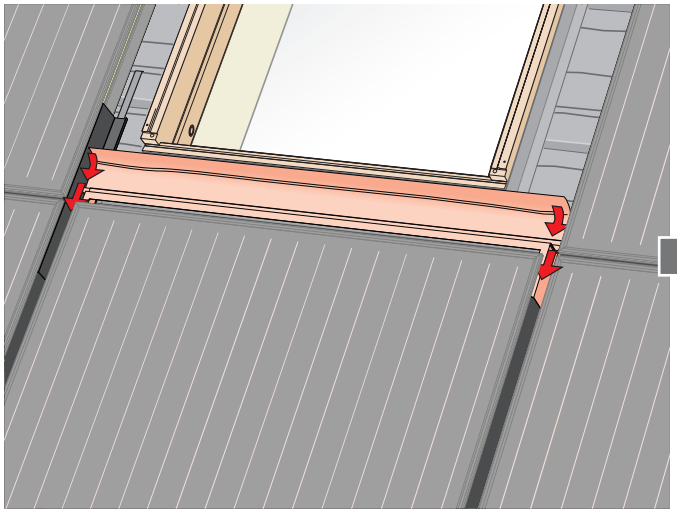

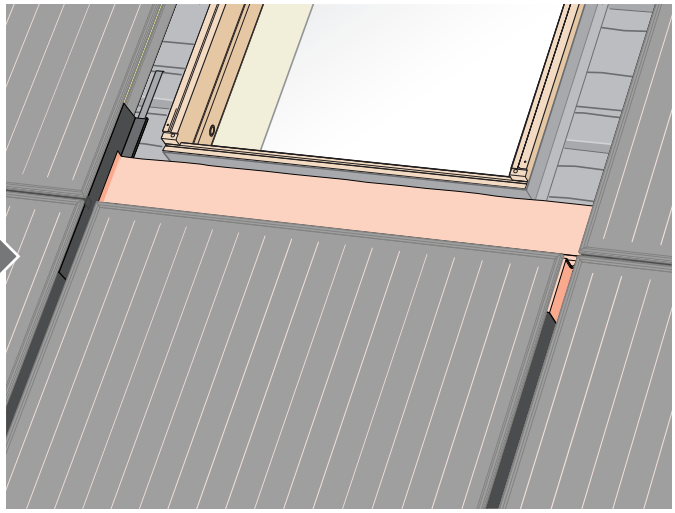

15



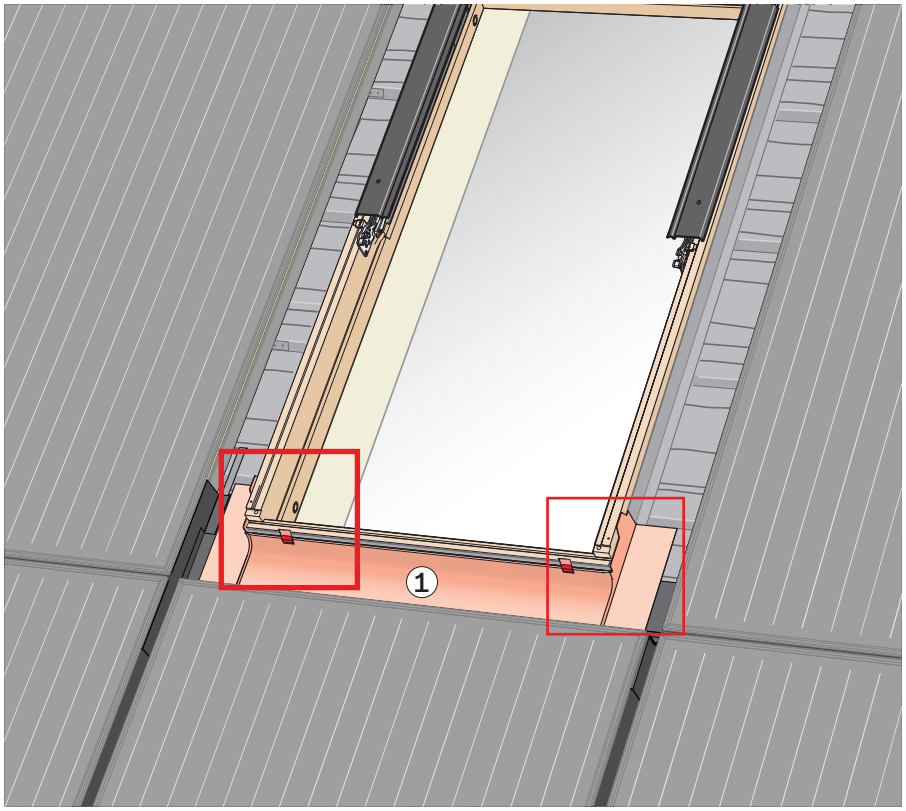

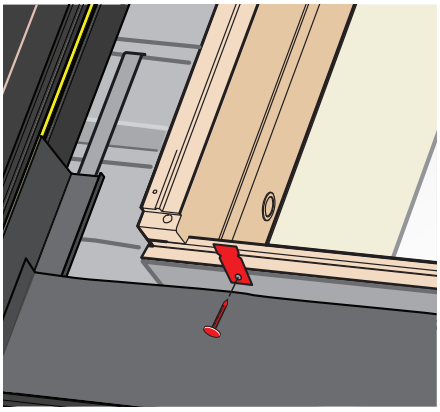

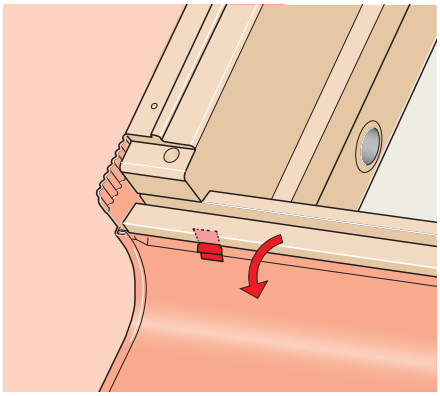

16

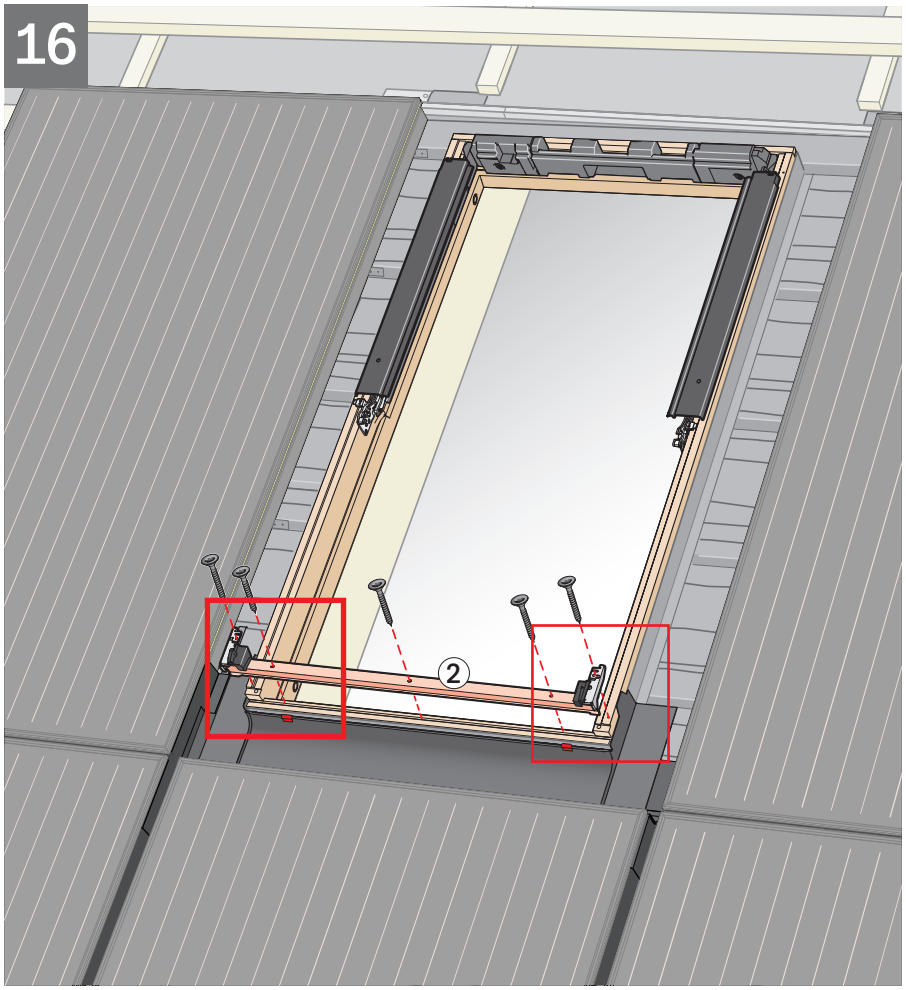

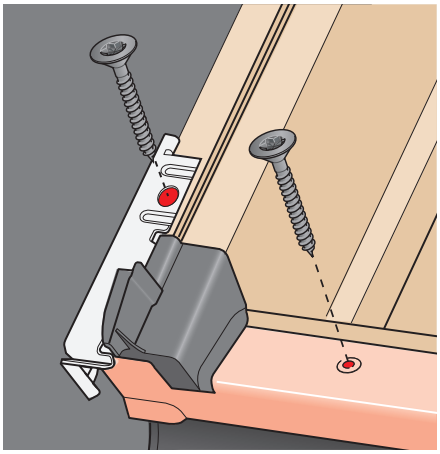

17

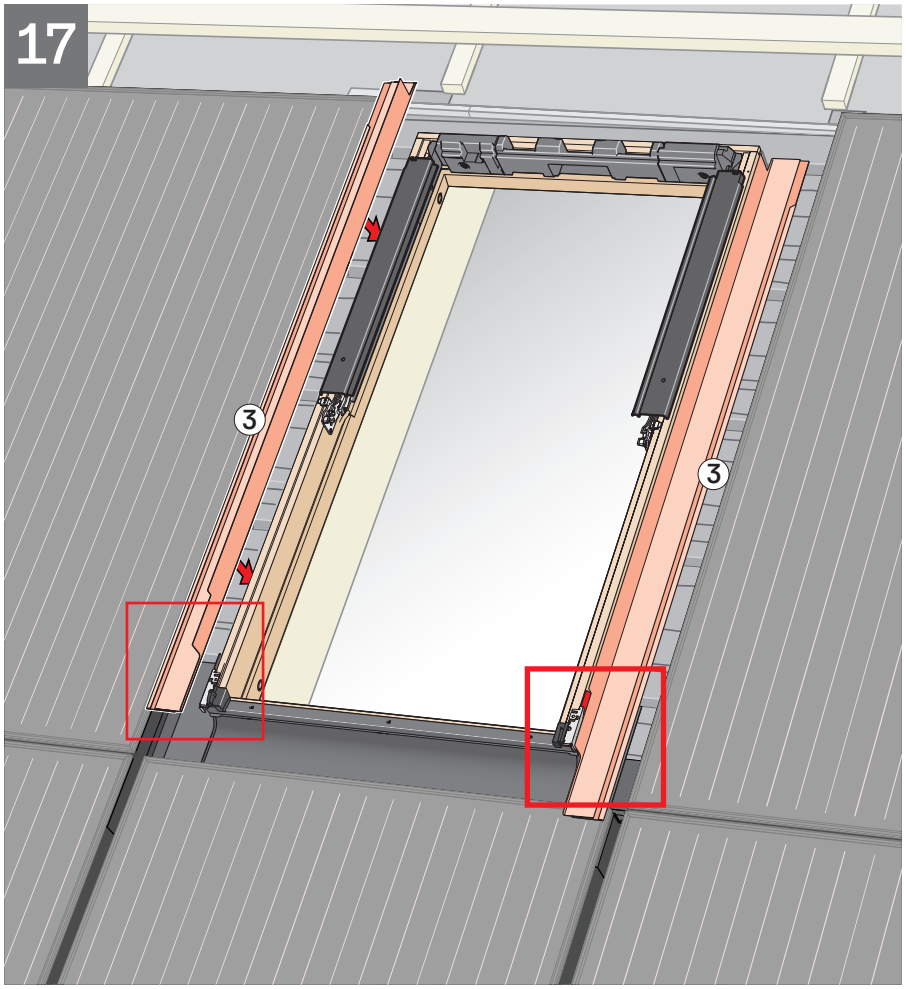

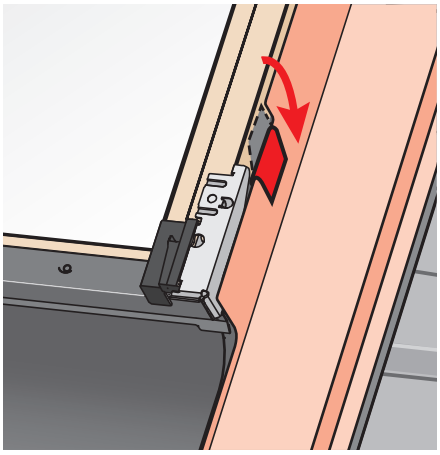

18

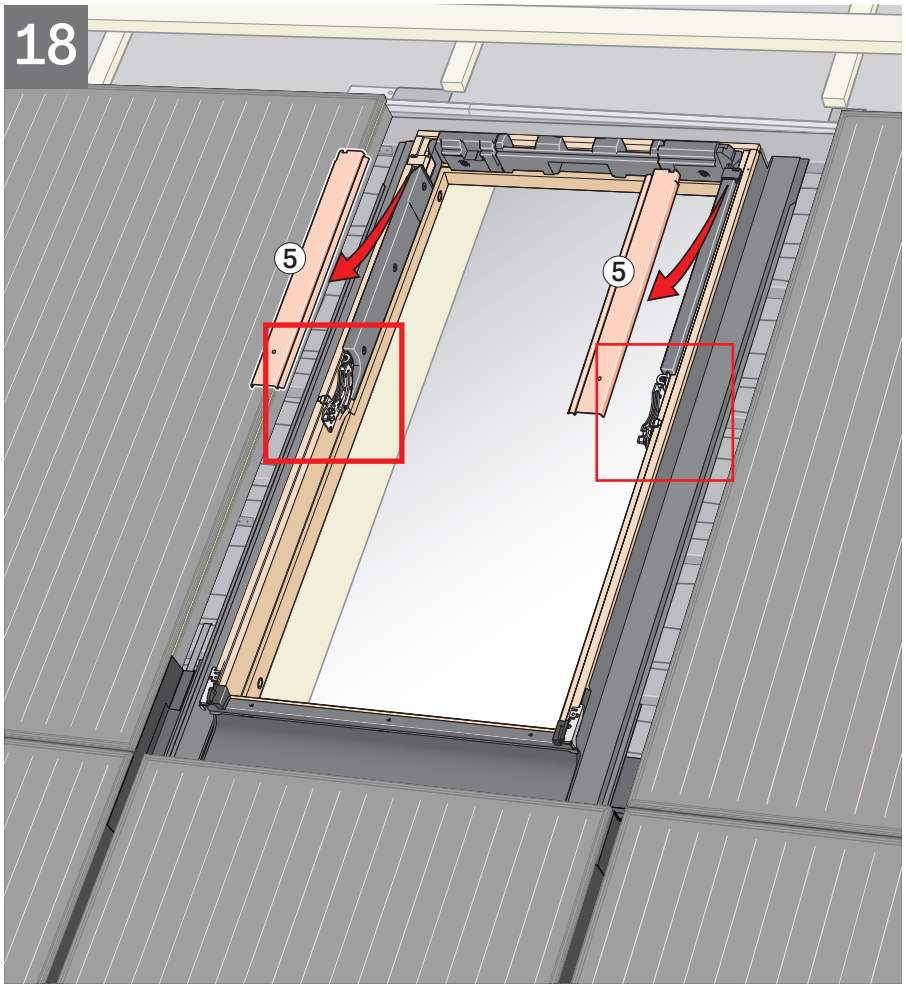

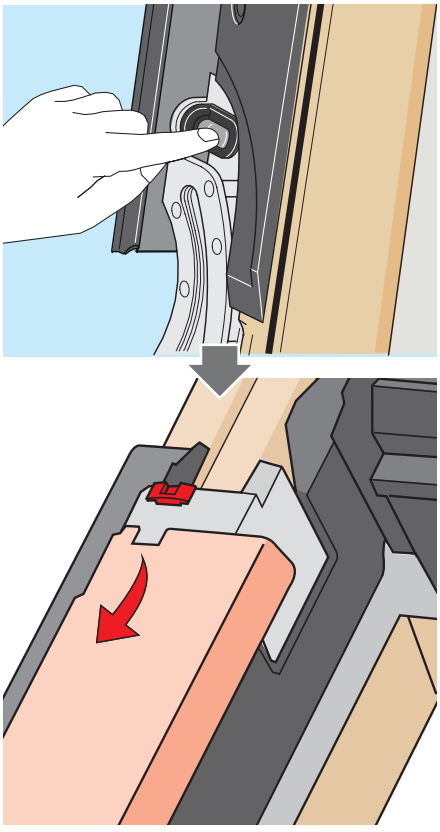

19

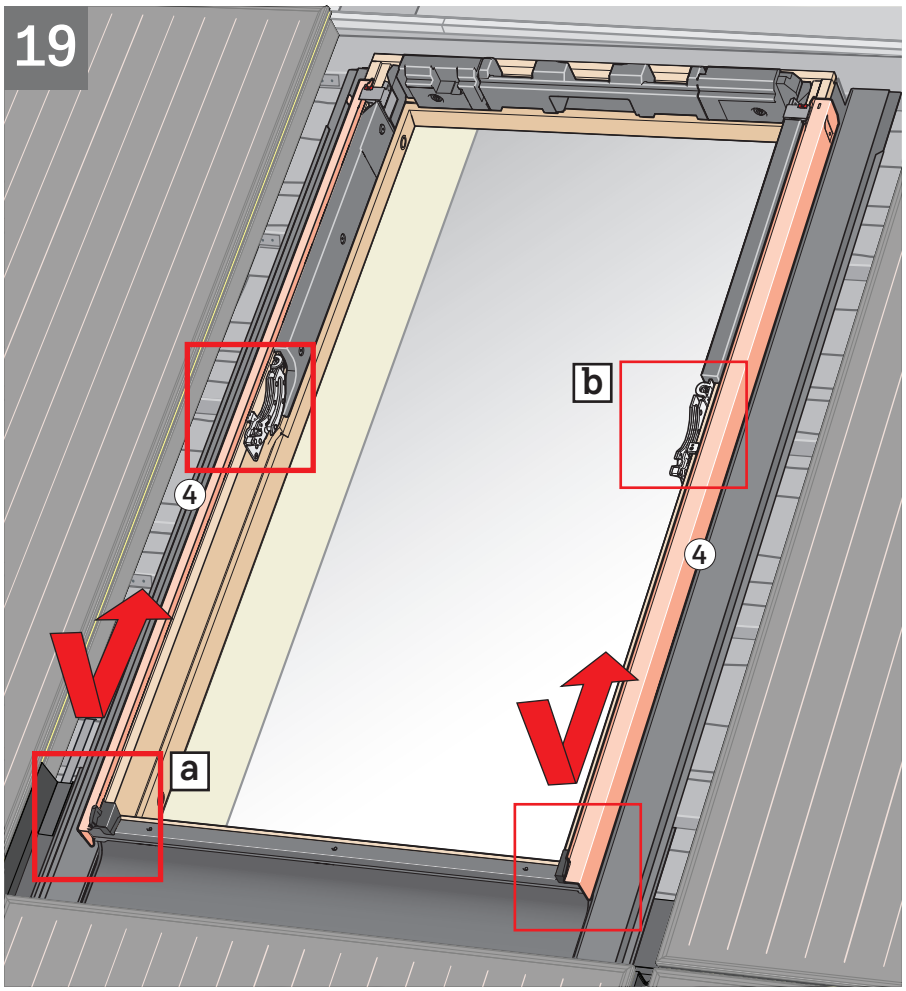

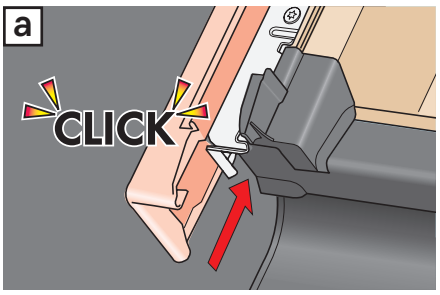

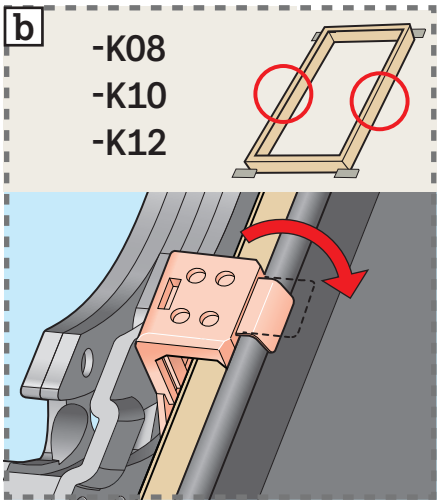

20

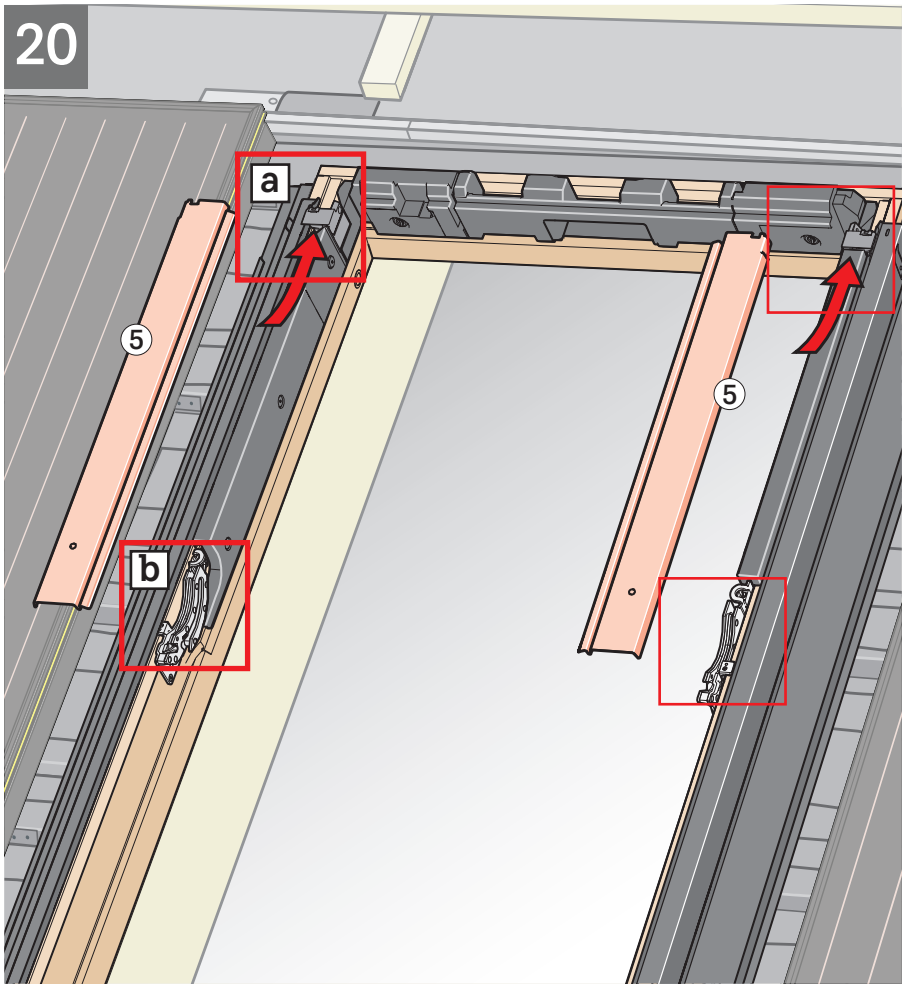

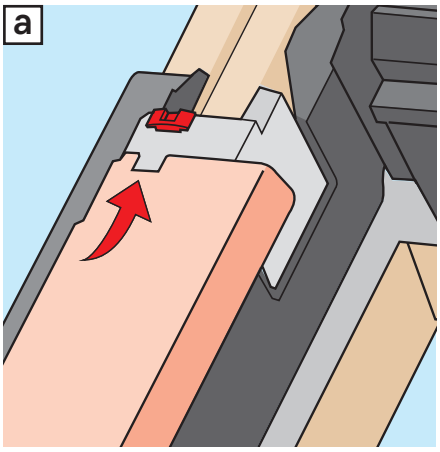

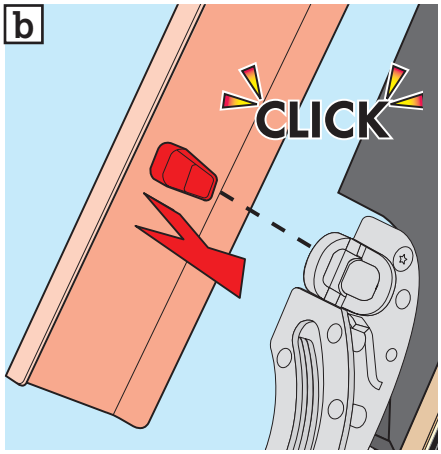

21

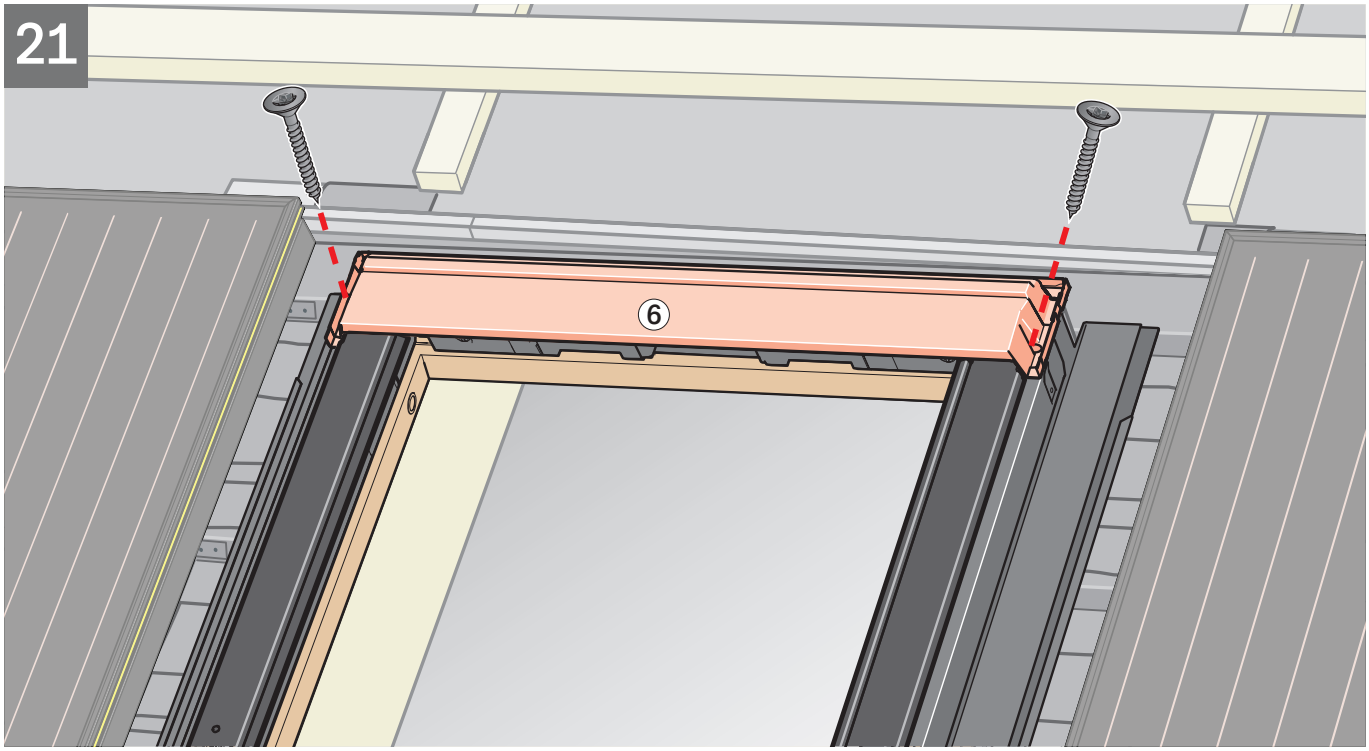

22

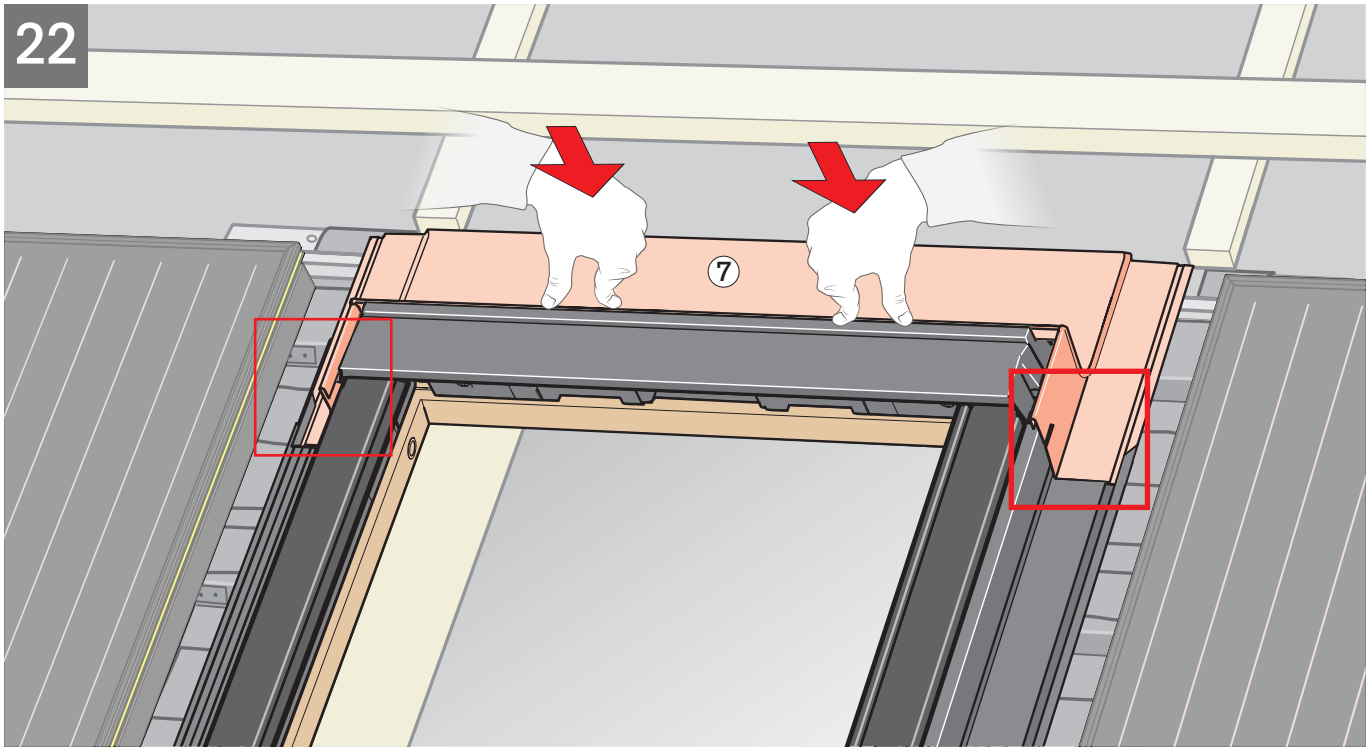

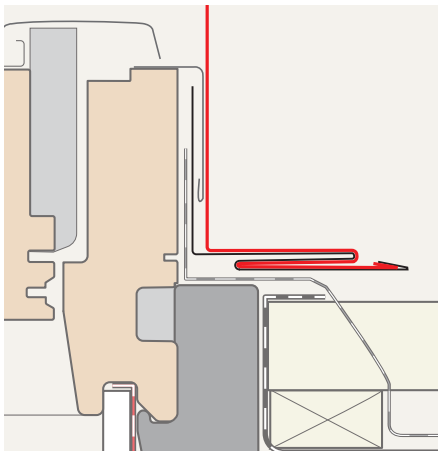

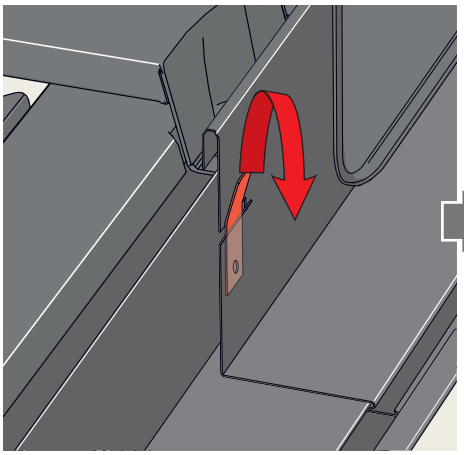

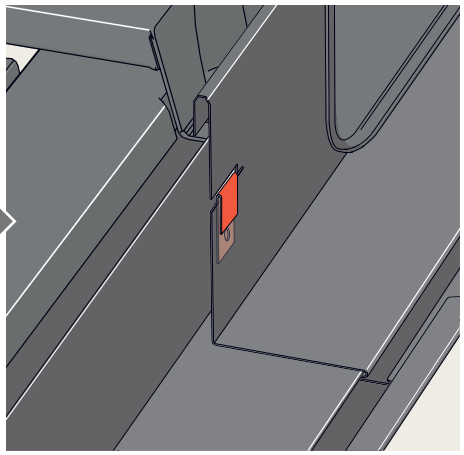

23



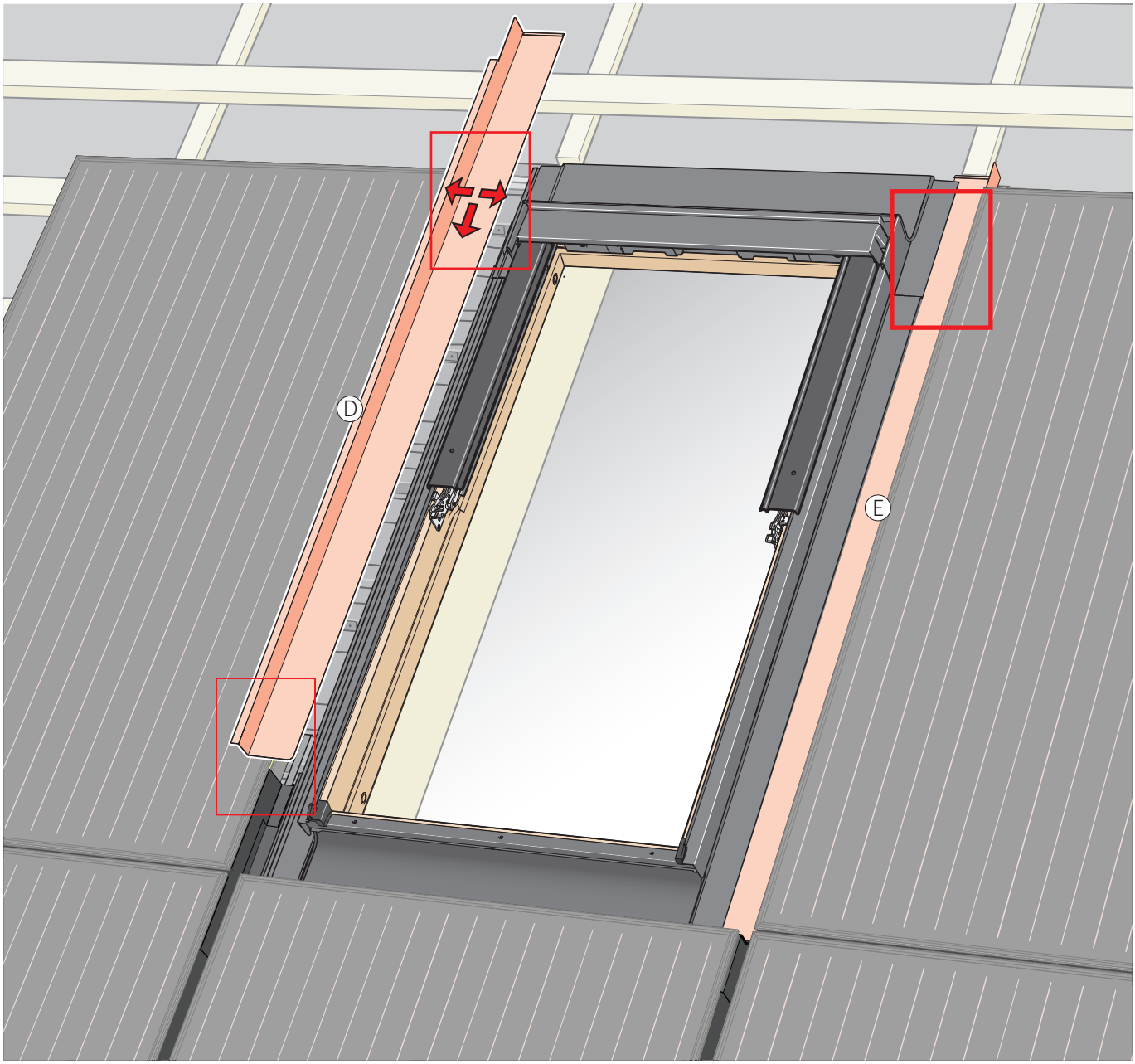

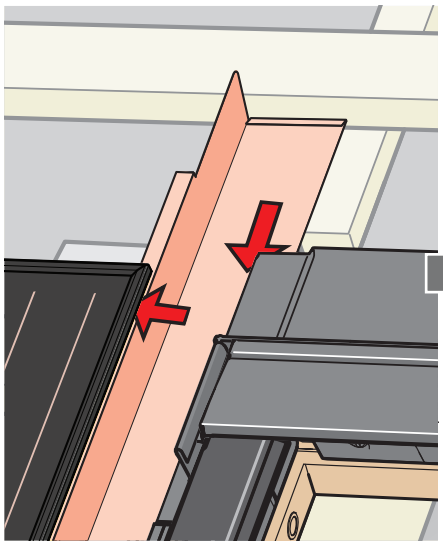

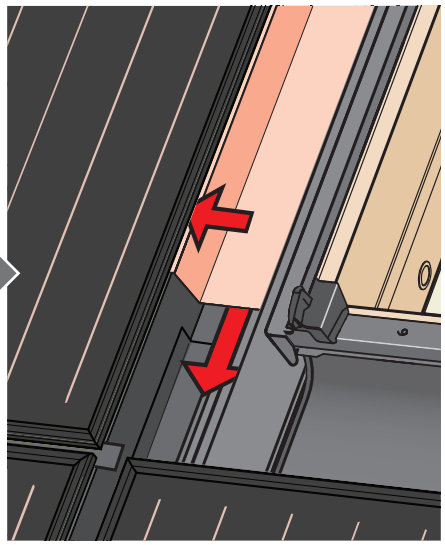

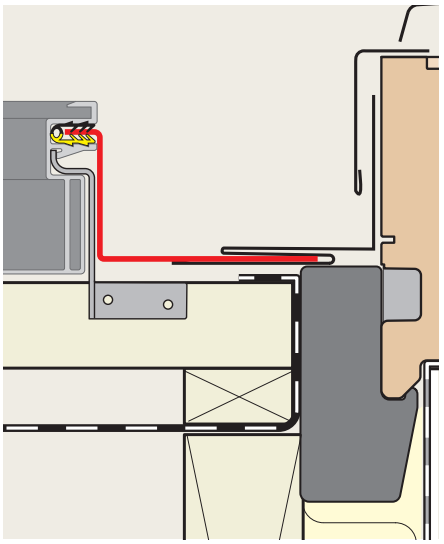

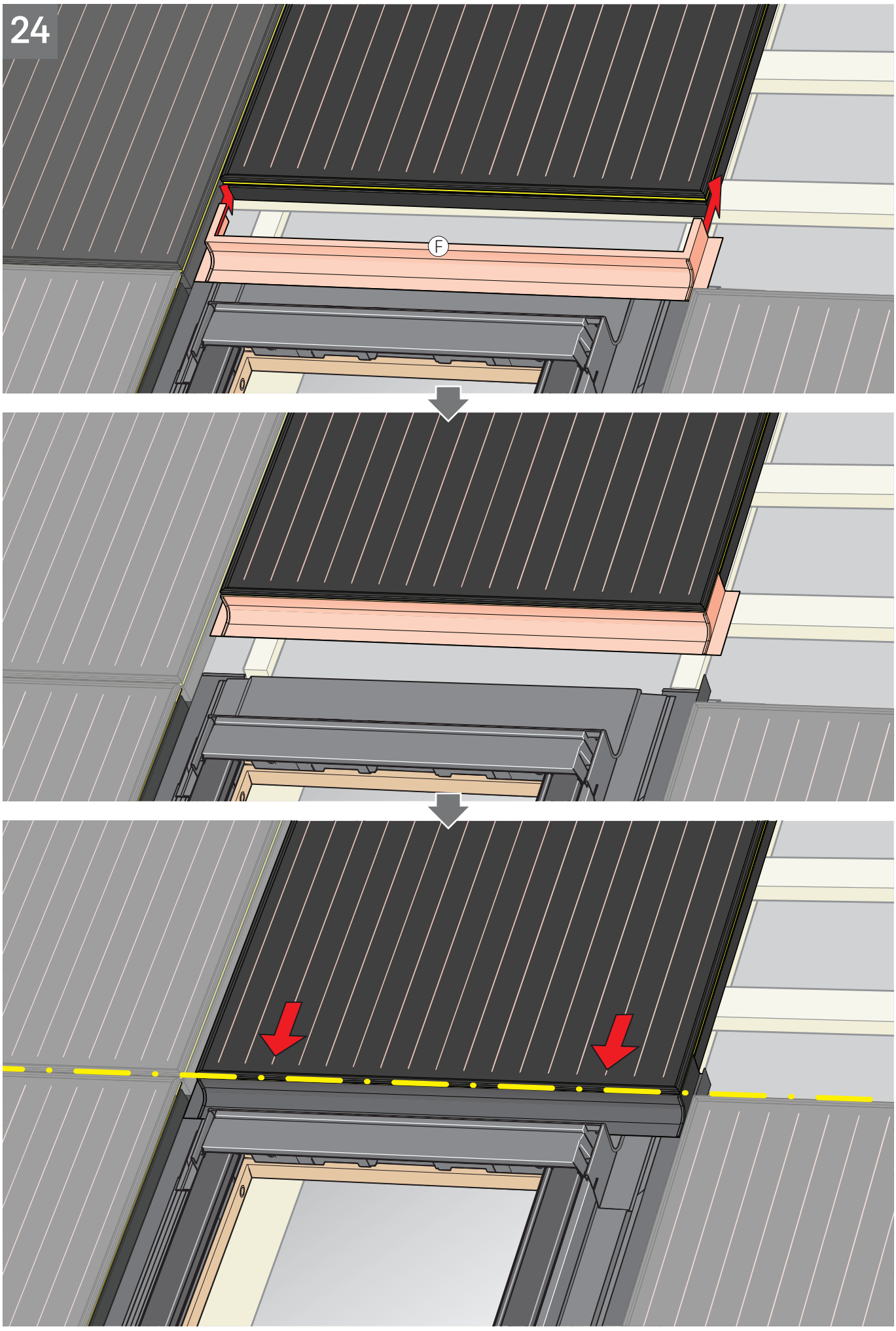
24
F

25

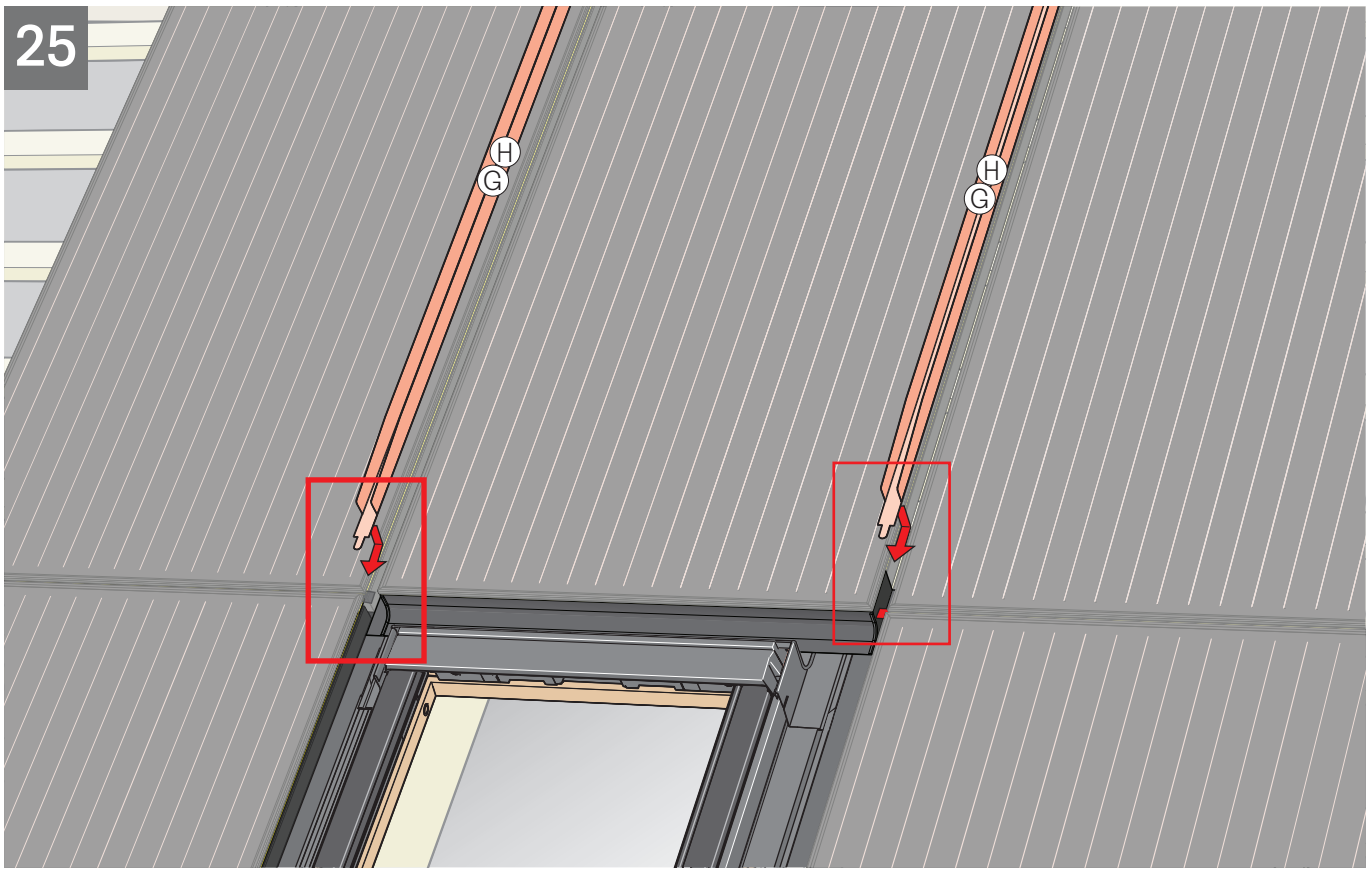

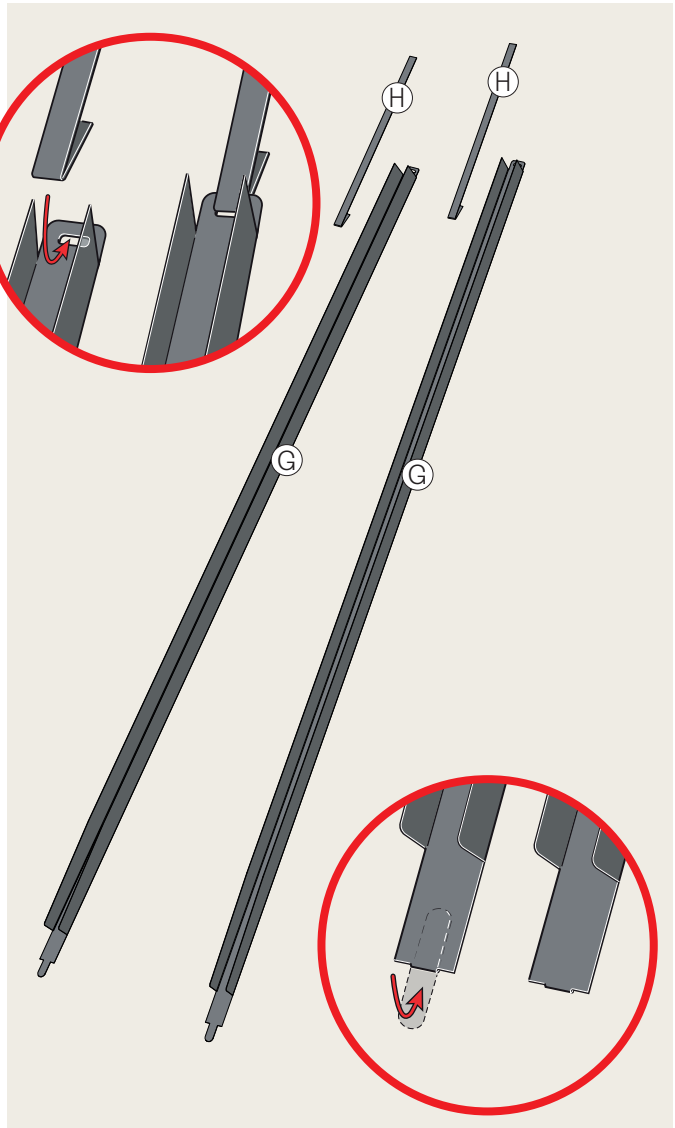

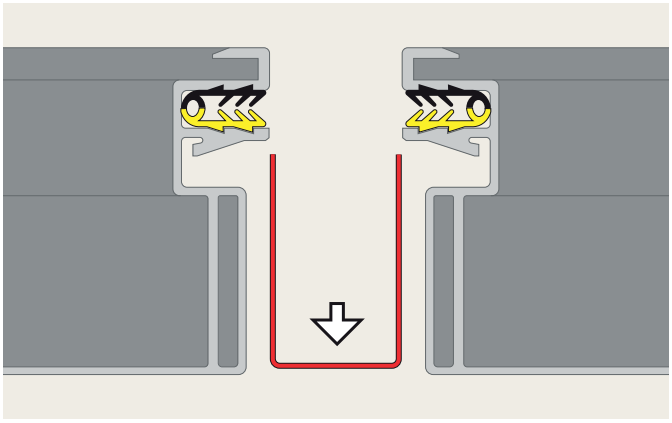

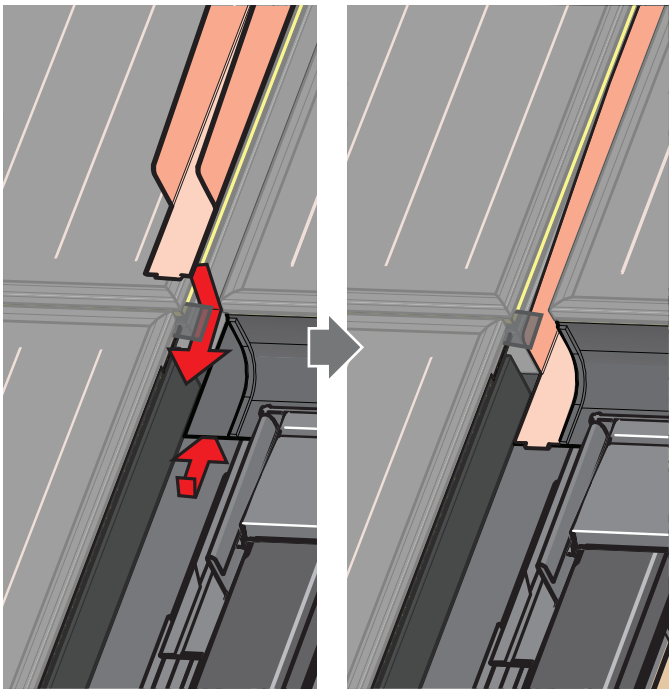

26

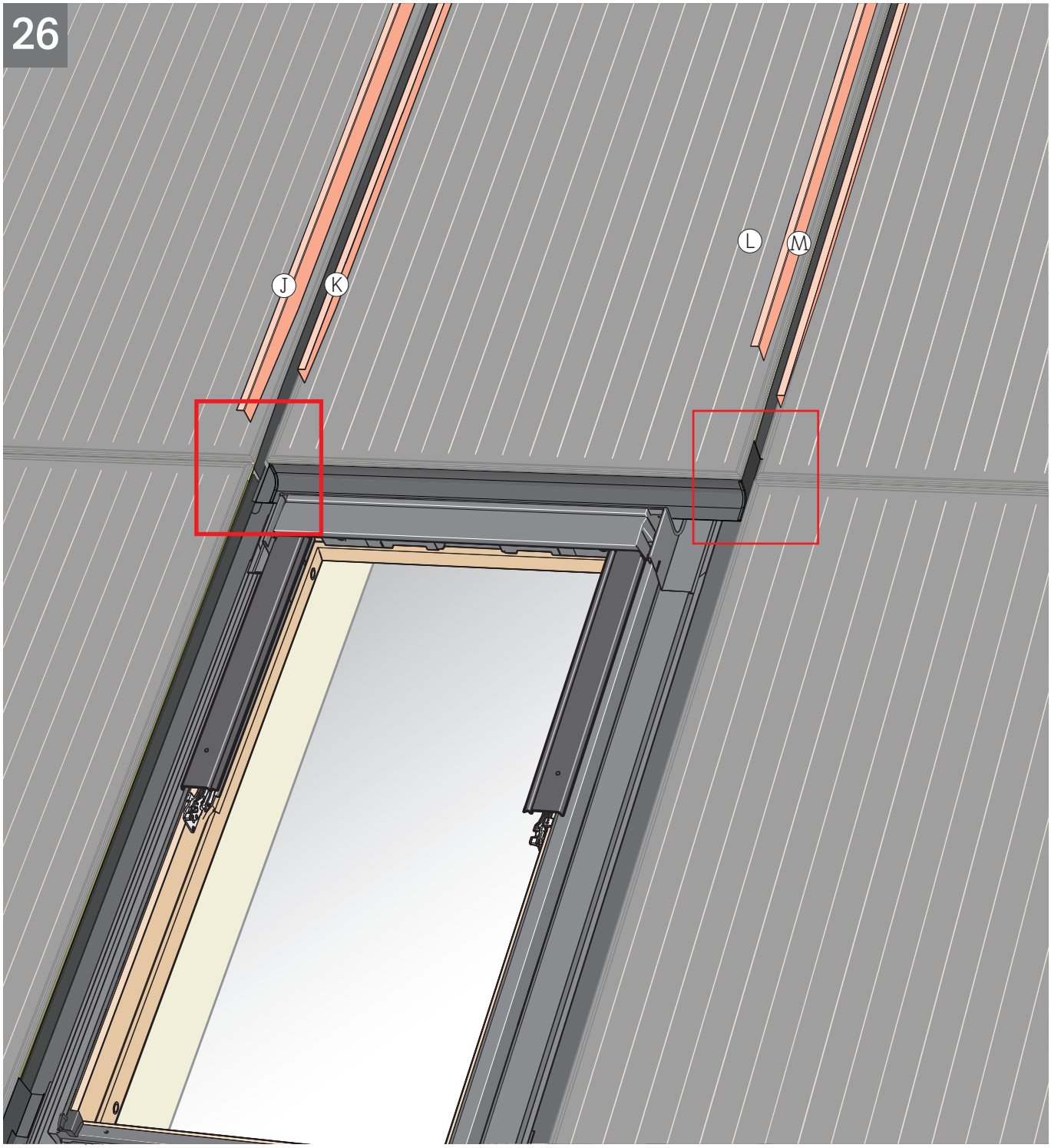

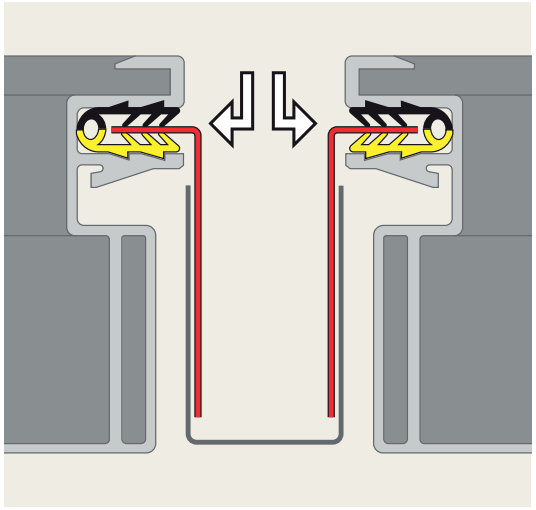

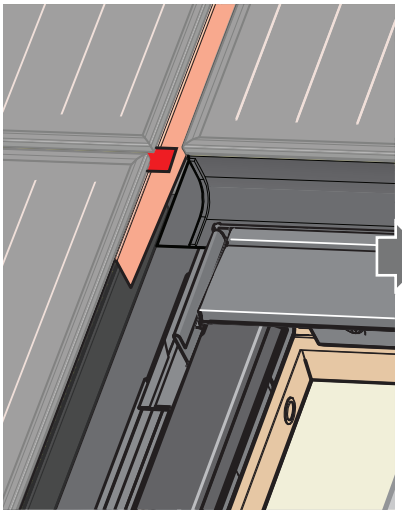

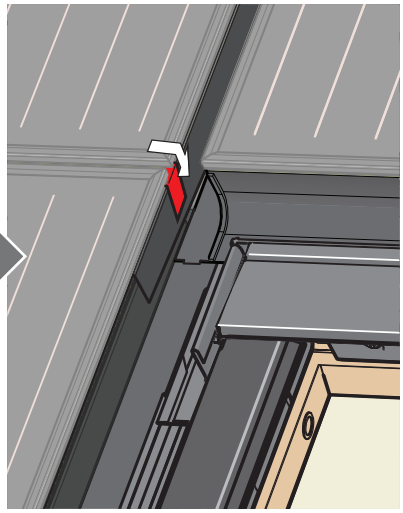

27

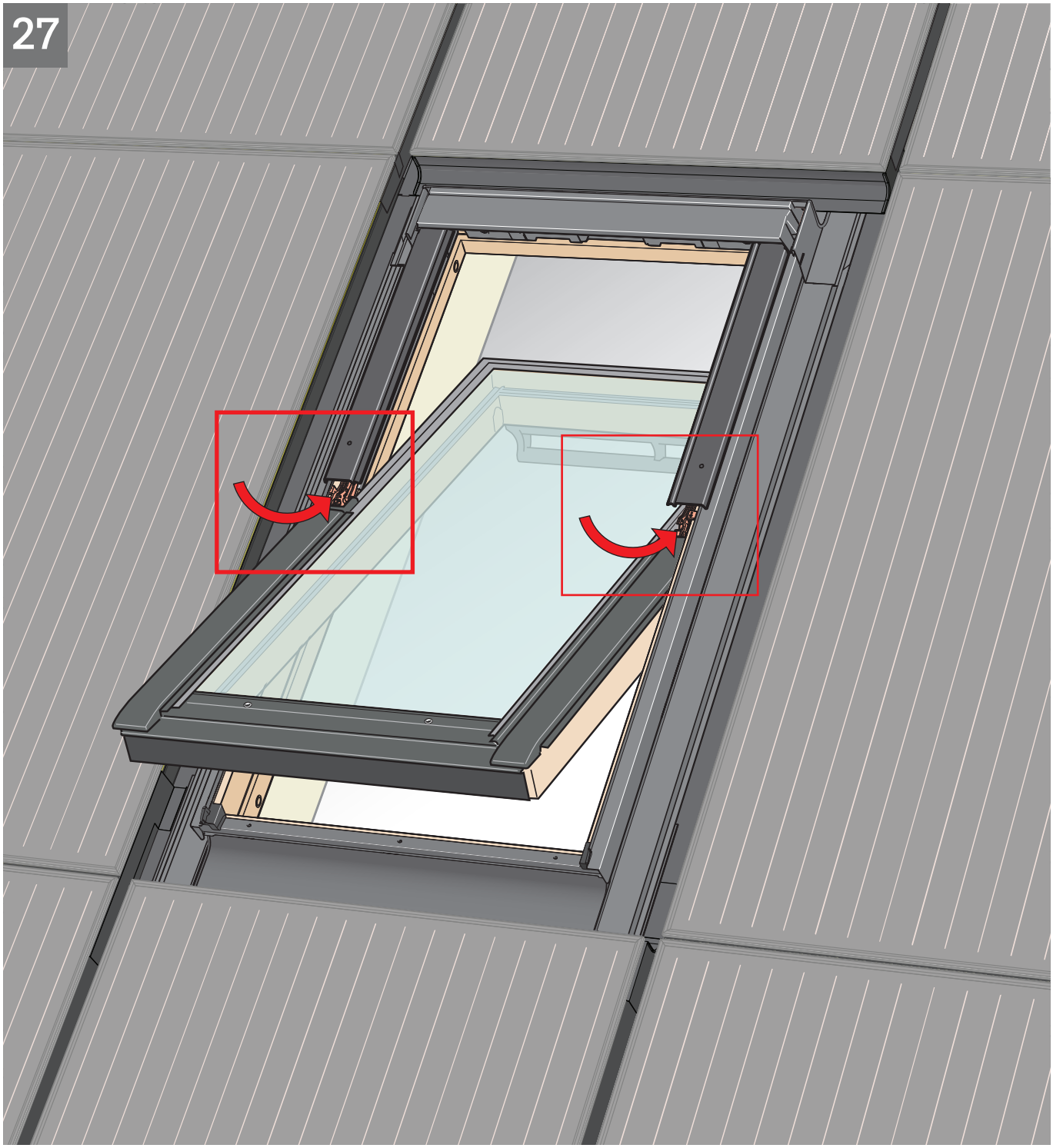

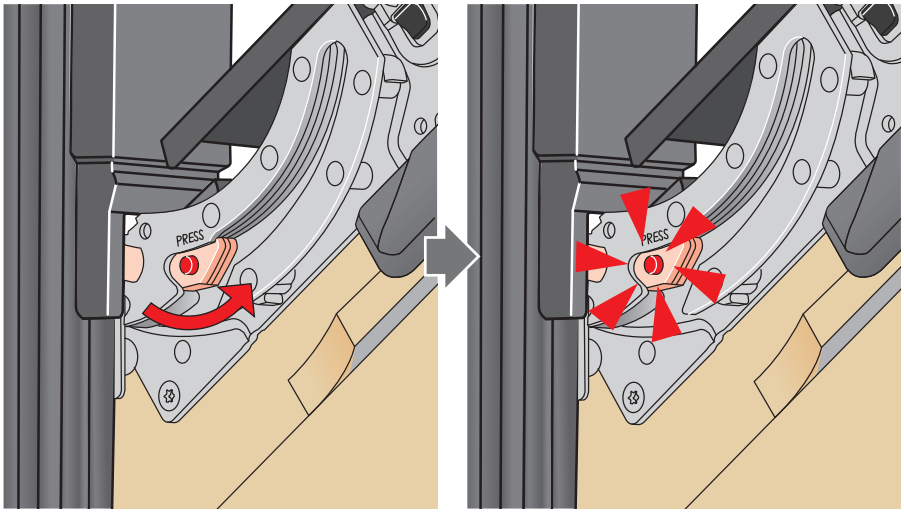





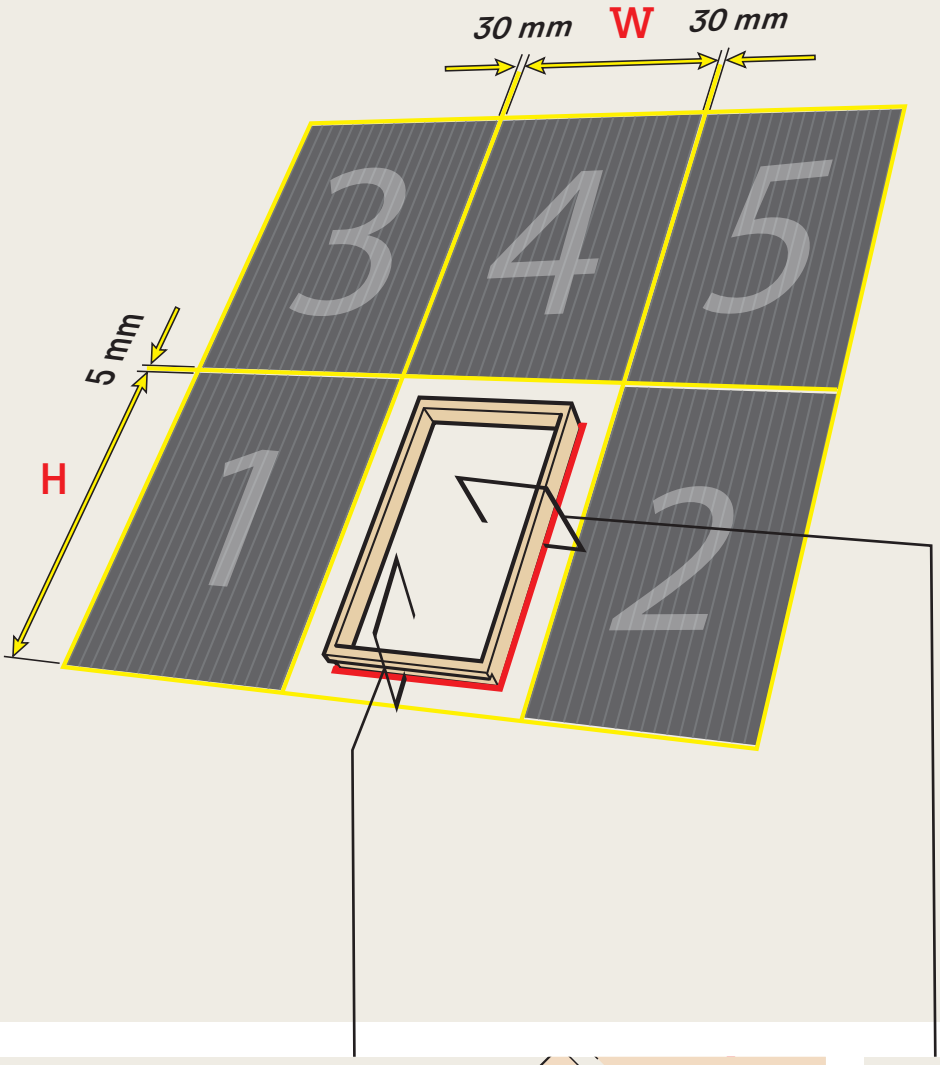

	W
Fusion	992 mm
G1	1000 mm
M10	1134 mm

	H
Fusion	1640 mm
G1	1686 mm
M10	1722 mm

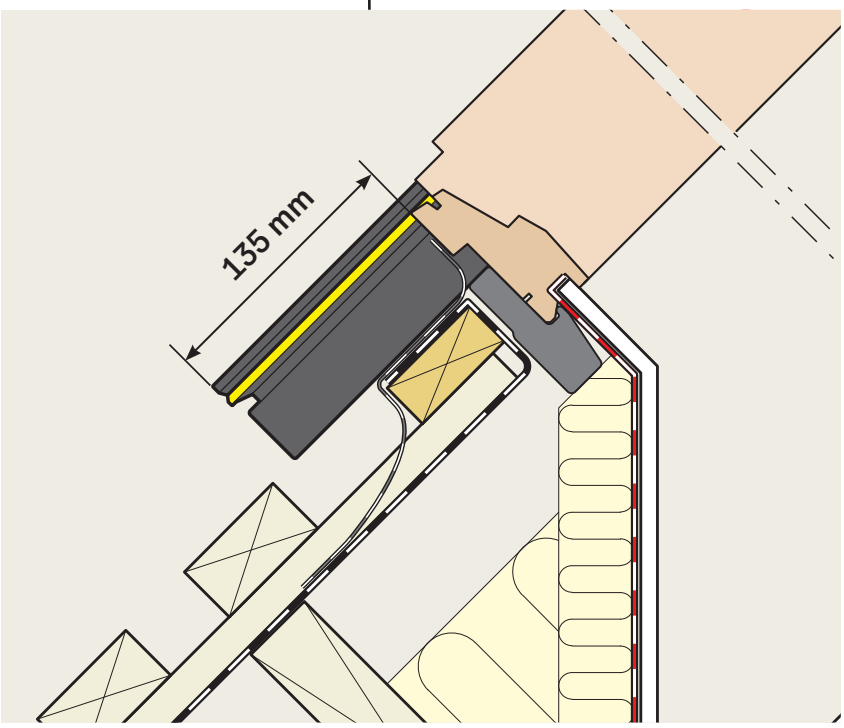

	X
Fusion	136 mm
G1	140 mm
M10	207 mm

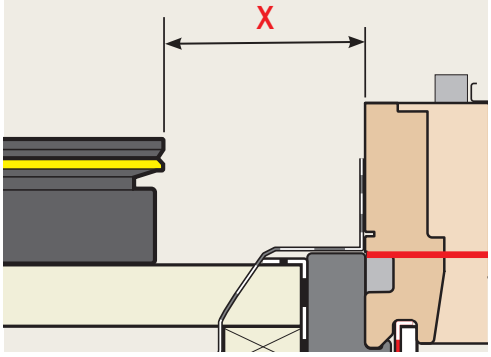

Pages 6 - 10 1 → 9

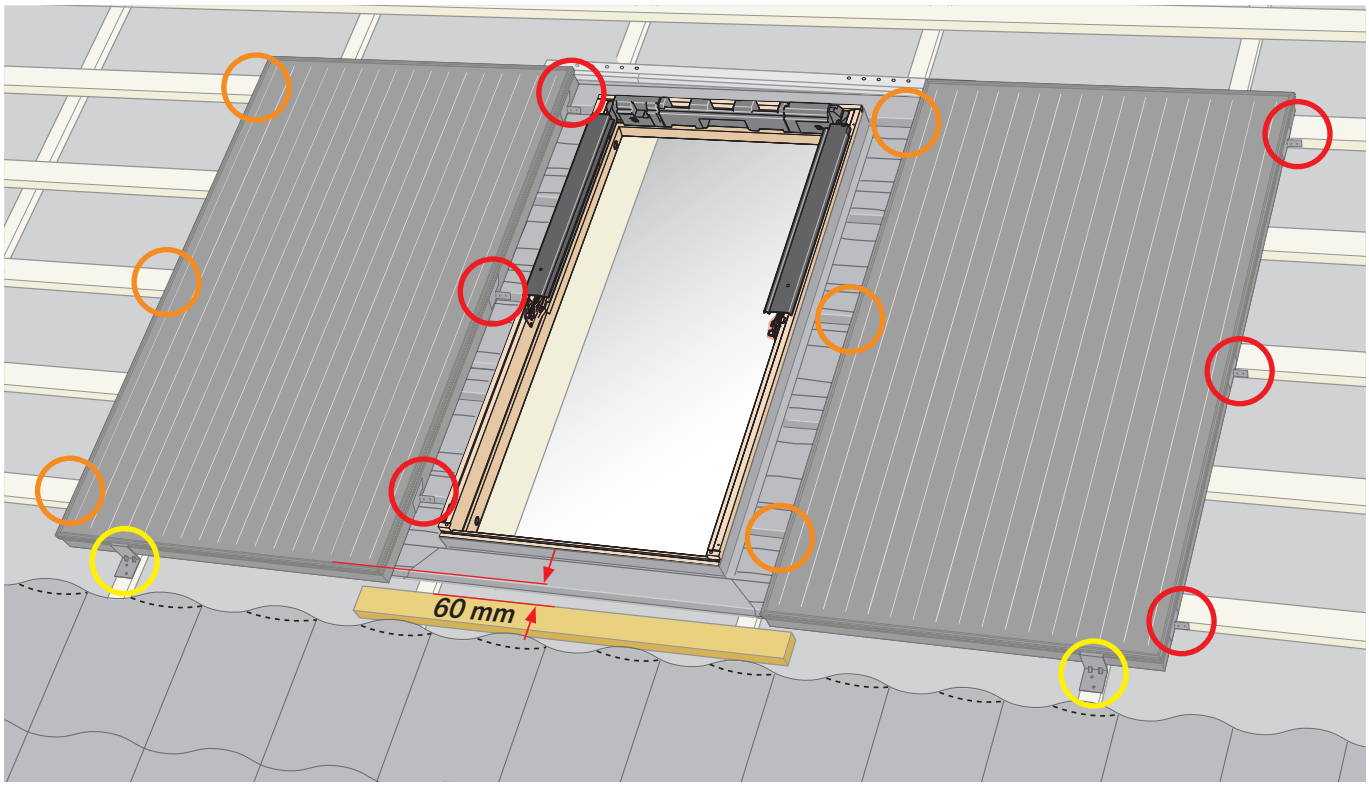

1b



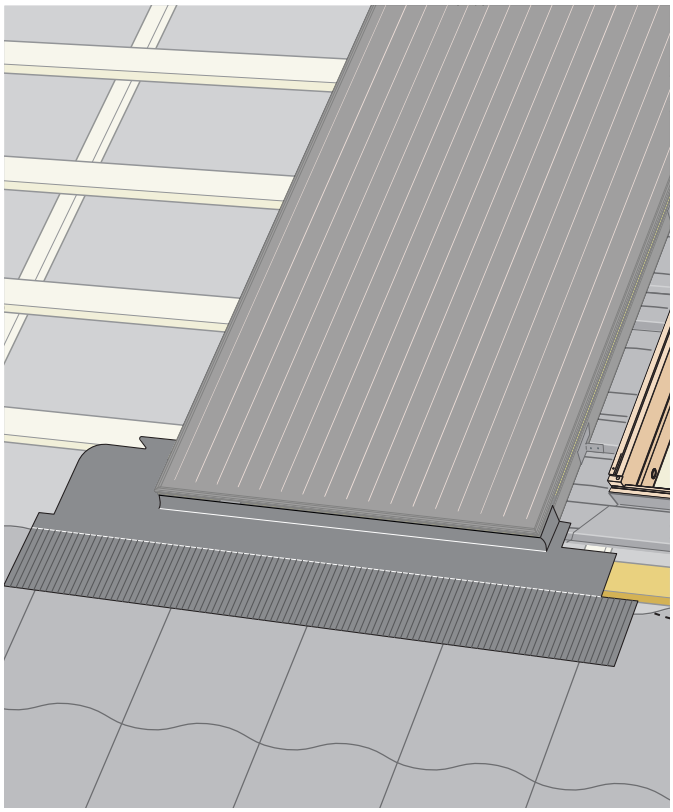

2b



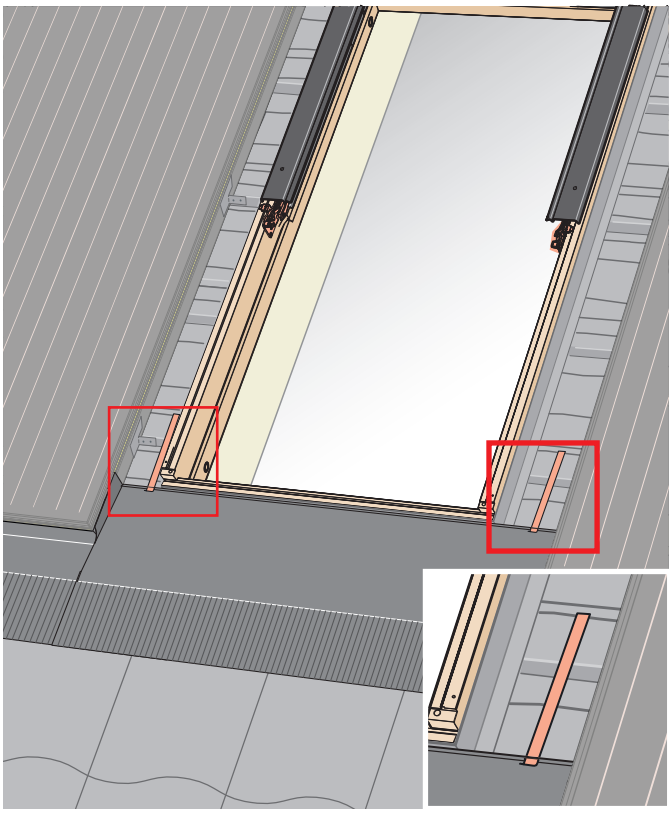

3b



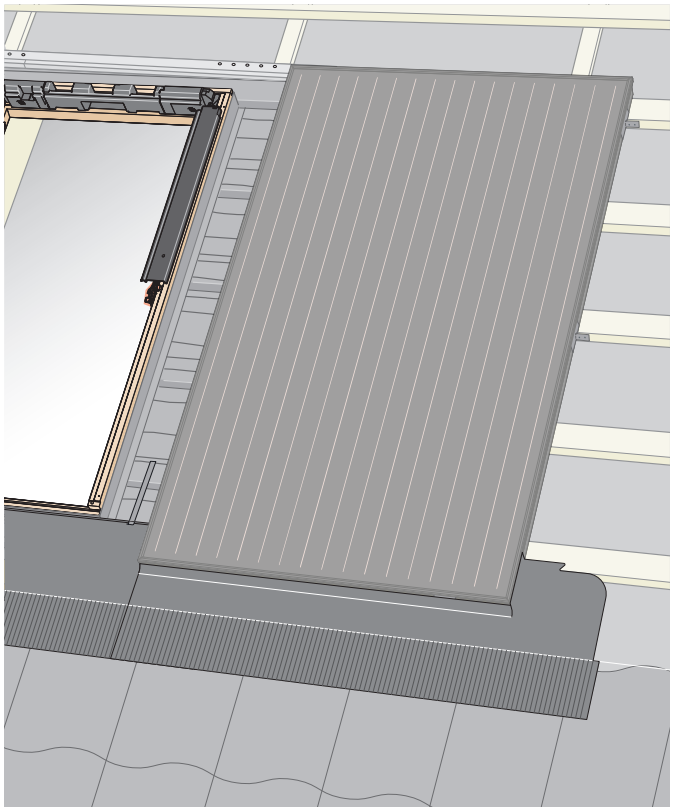

4b



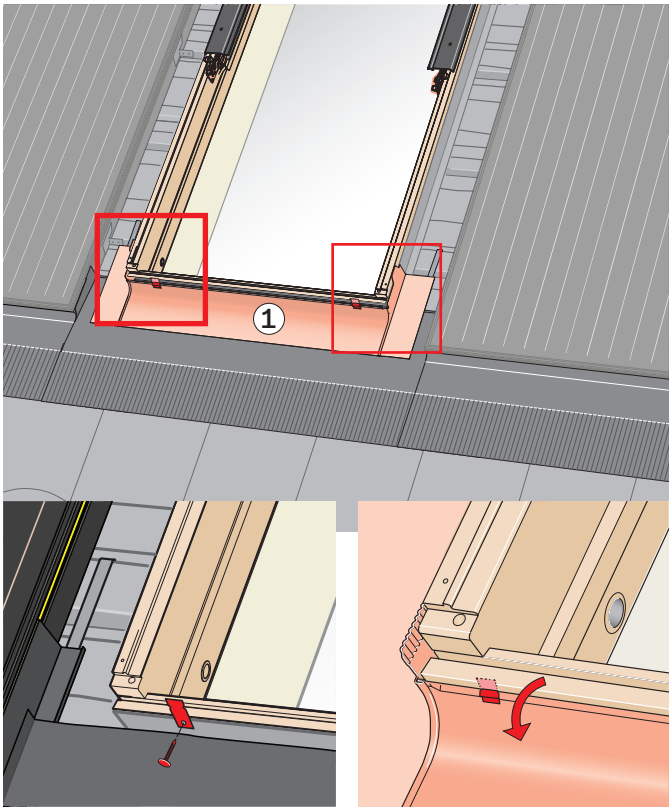

5b

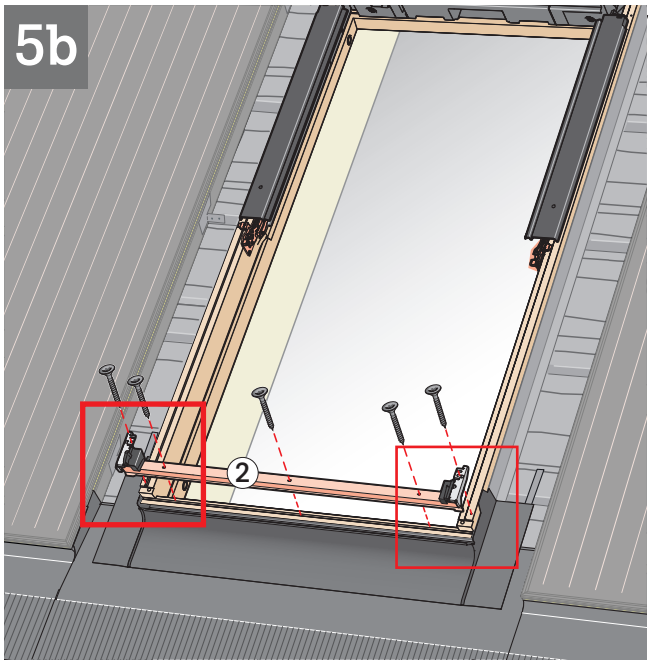

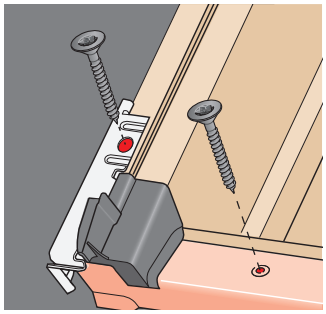

6b

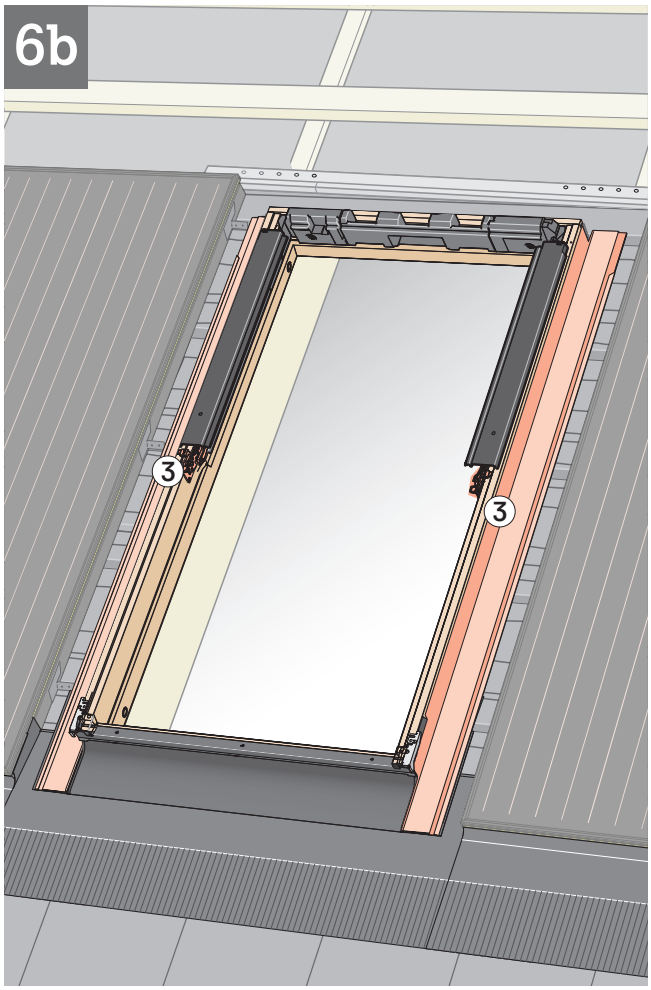

7b

Pages 16 - 18 17 → 21

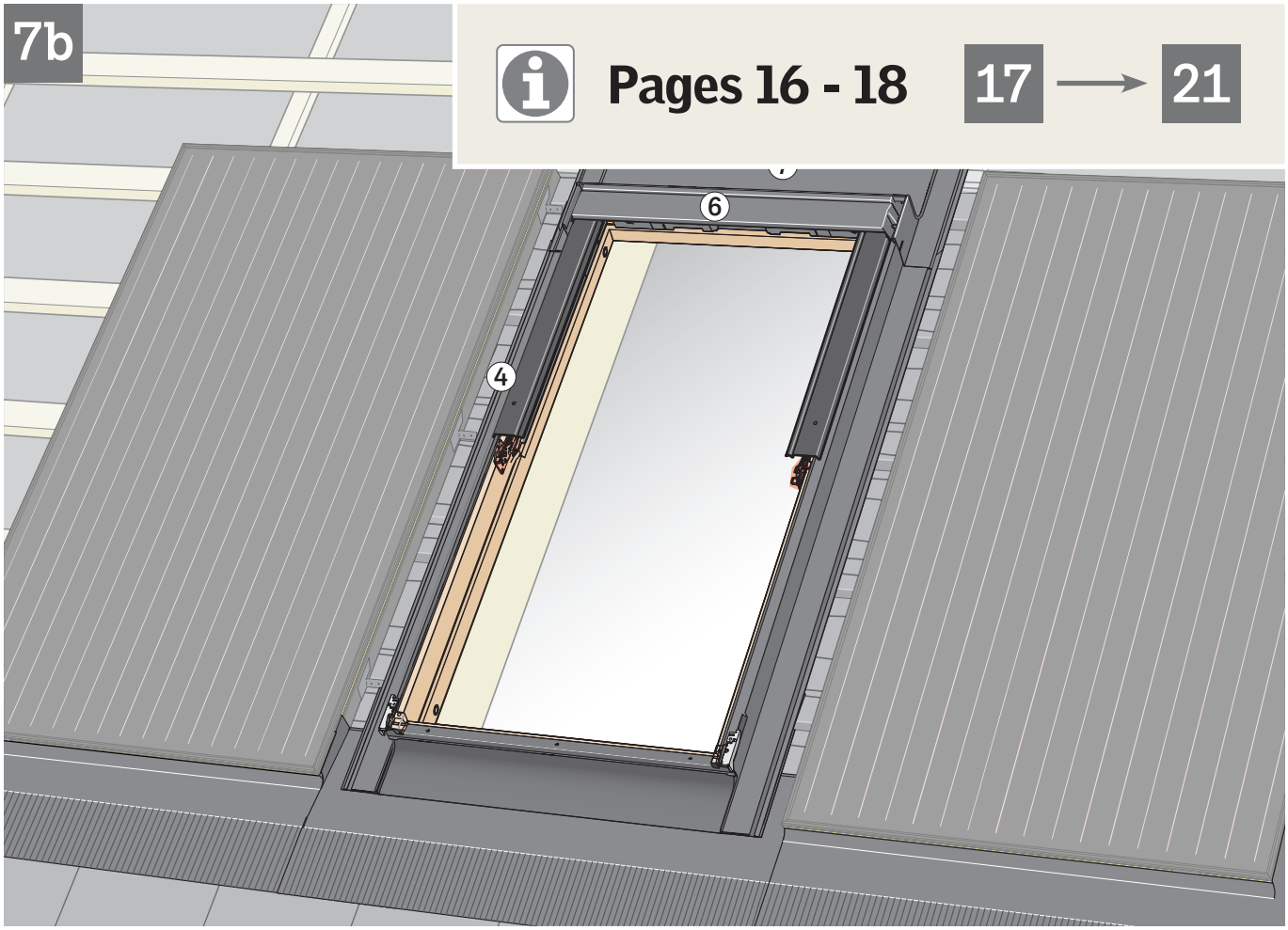

8b

Pages 18 - 21 22 → 25

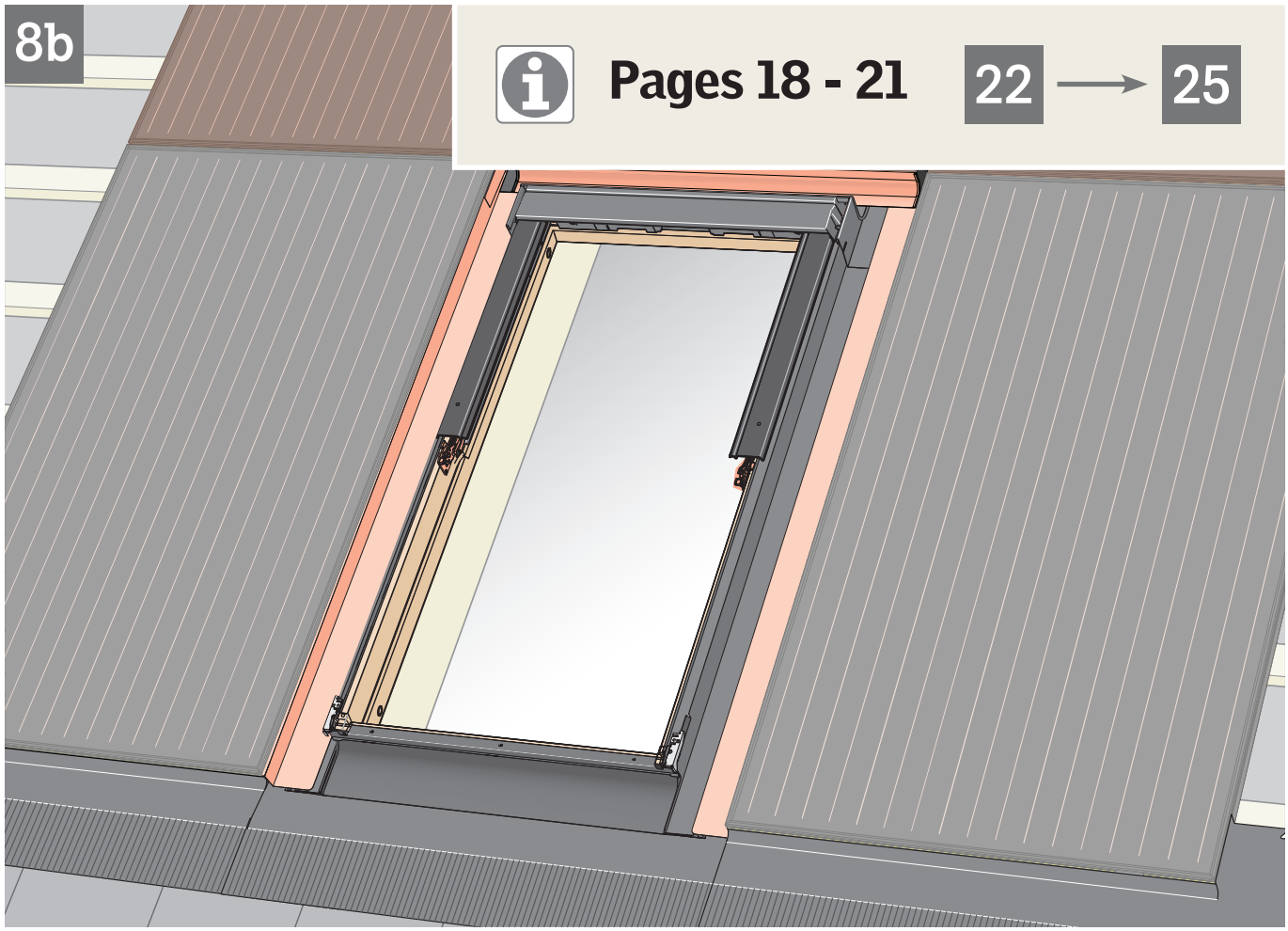

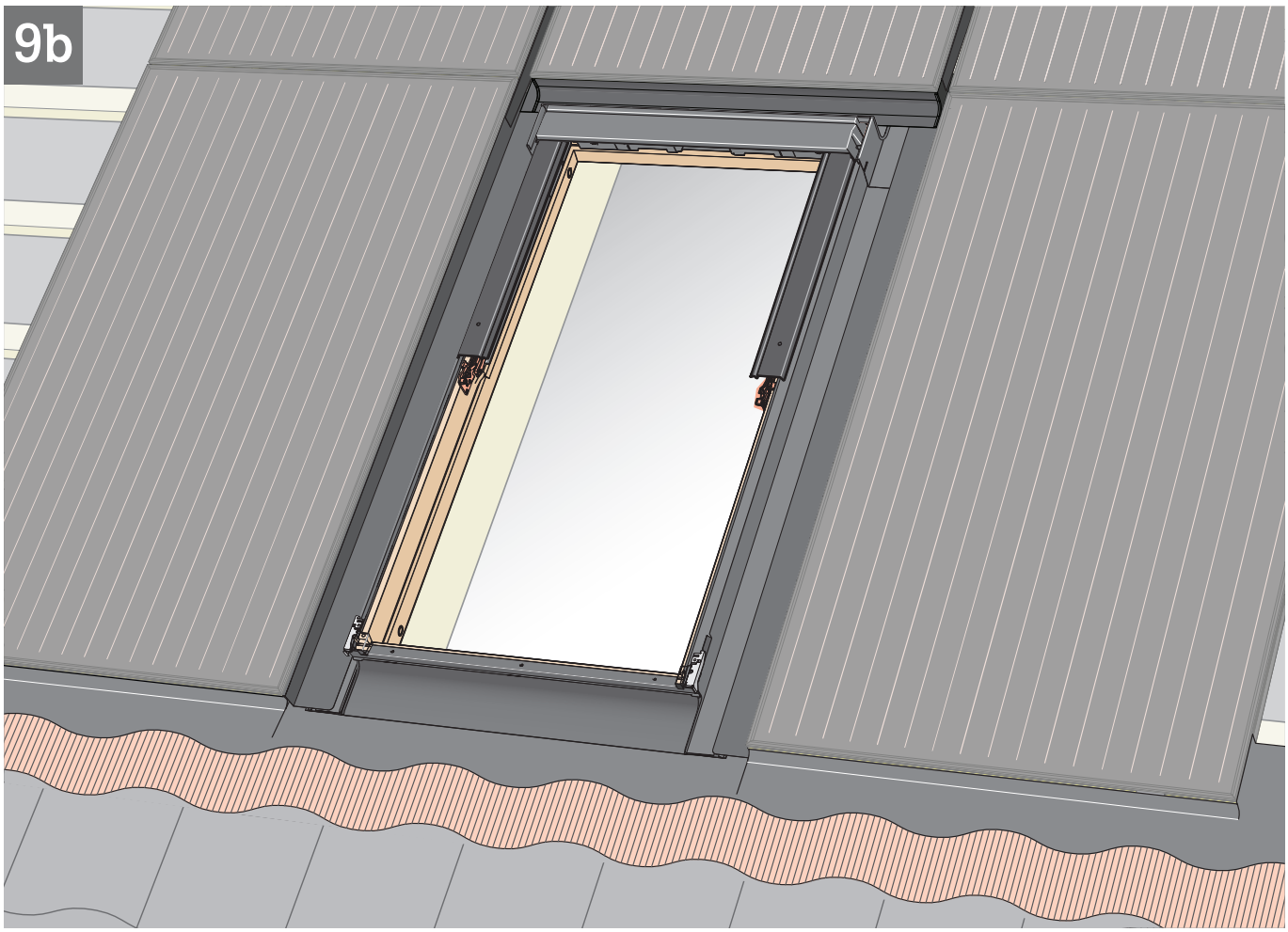
9b

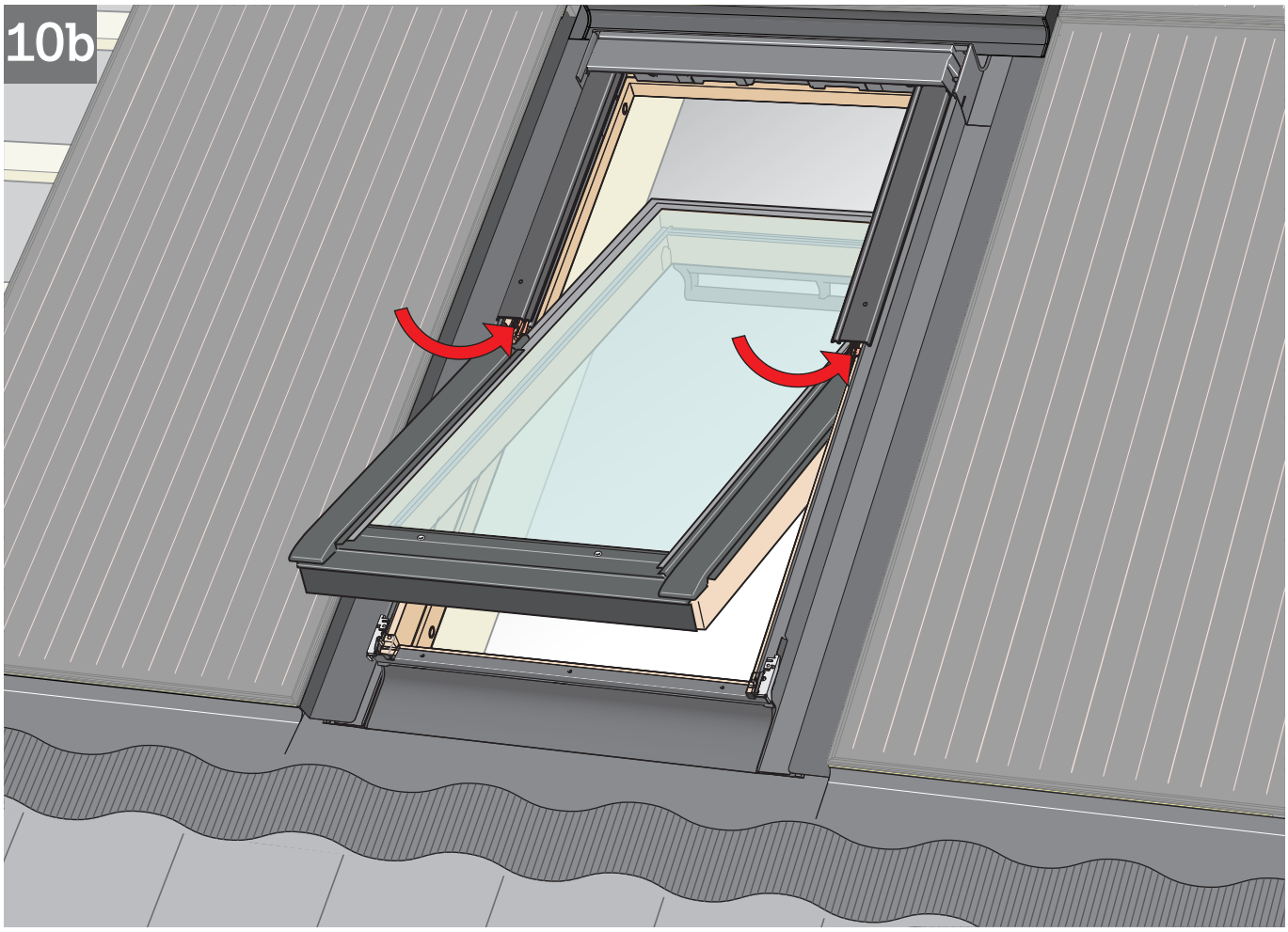
10b

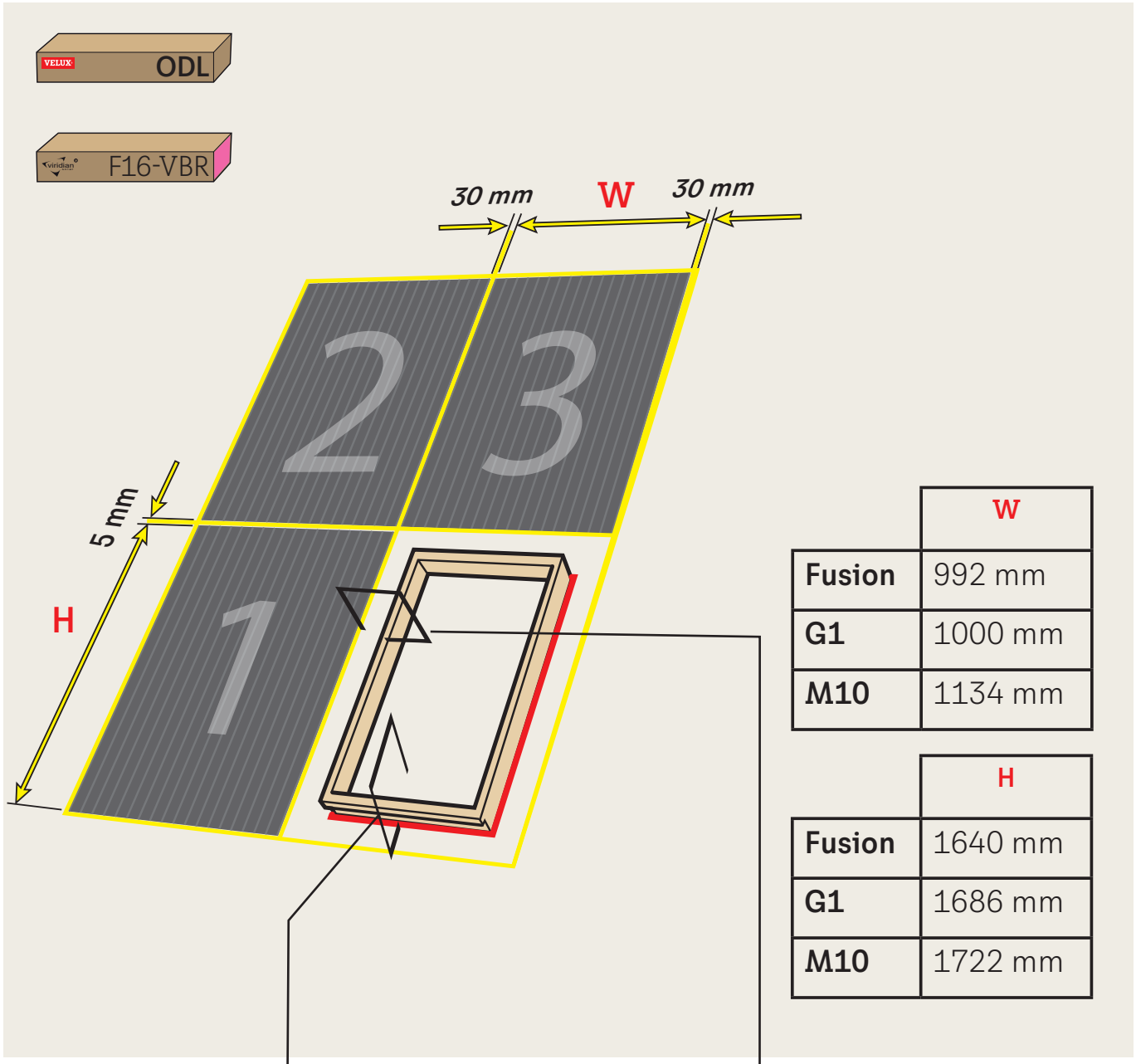

	W
Fusion	992 mm
G1	1000 mm
M10	1134 mm

	H
Fusion	1640 mm
G1	1686 mm
M10	1722 mm

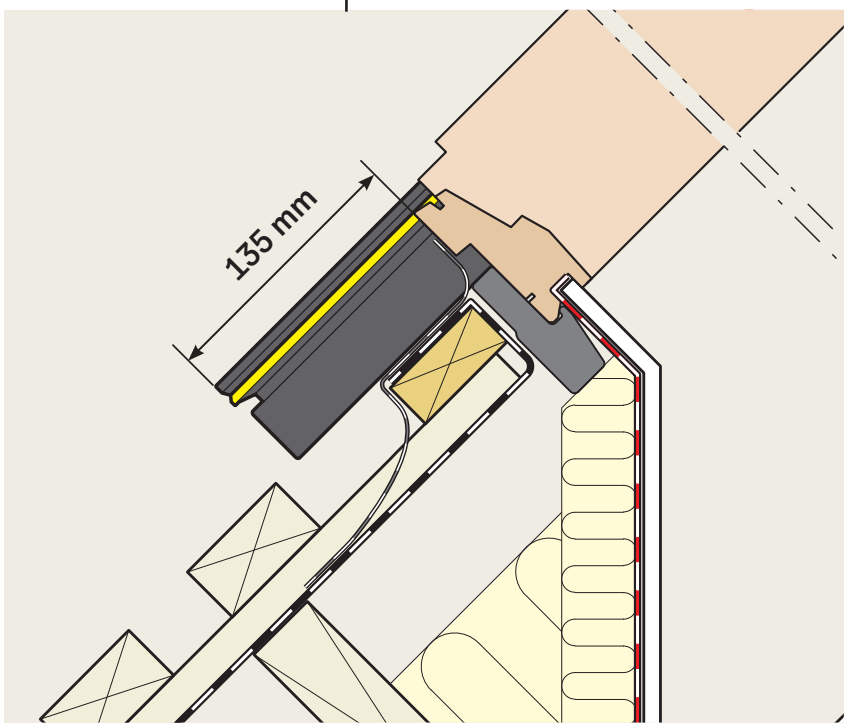

	X
Fusion	136 mm
G1	140 mm
M10	207 mm

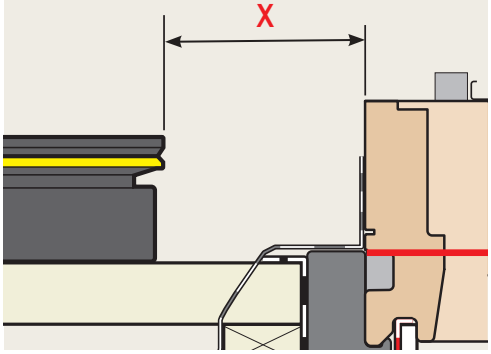





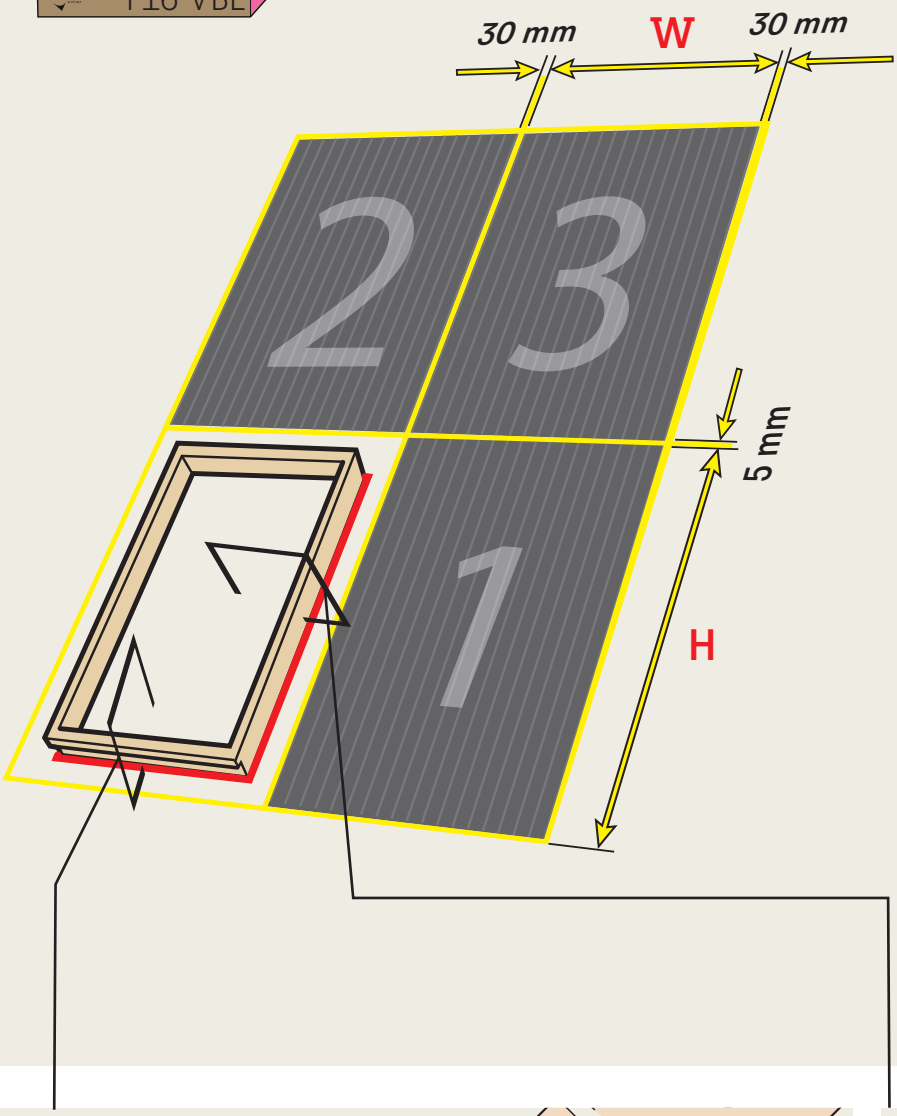

	W
Fusion	992 mm
G1	1000 mm
M10	1134 mm

	H
Fusion	1640 mm
G1	1686 mm
M10	1722 mm

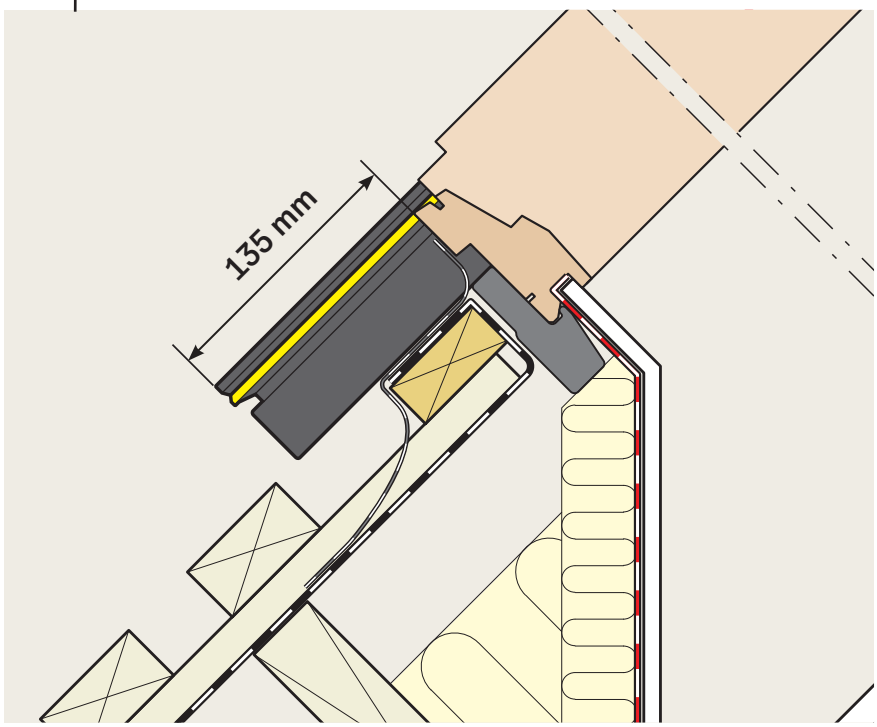

	X
Fusion	136 mm
G1	140 mm
M10	207 mm

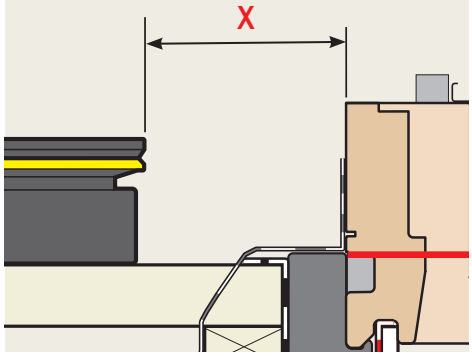

Pages 6 - 10 1 → 9

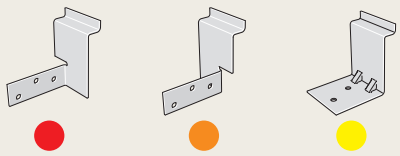

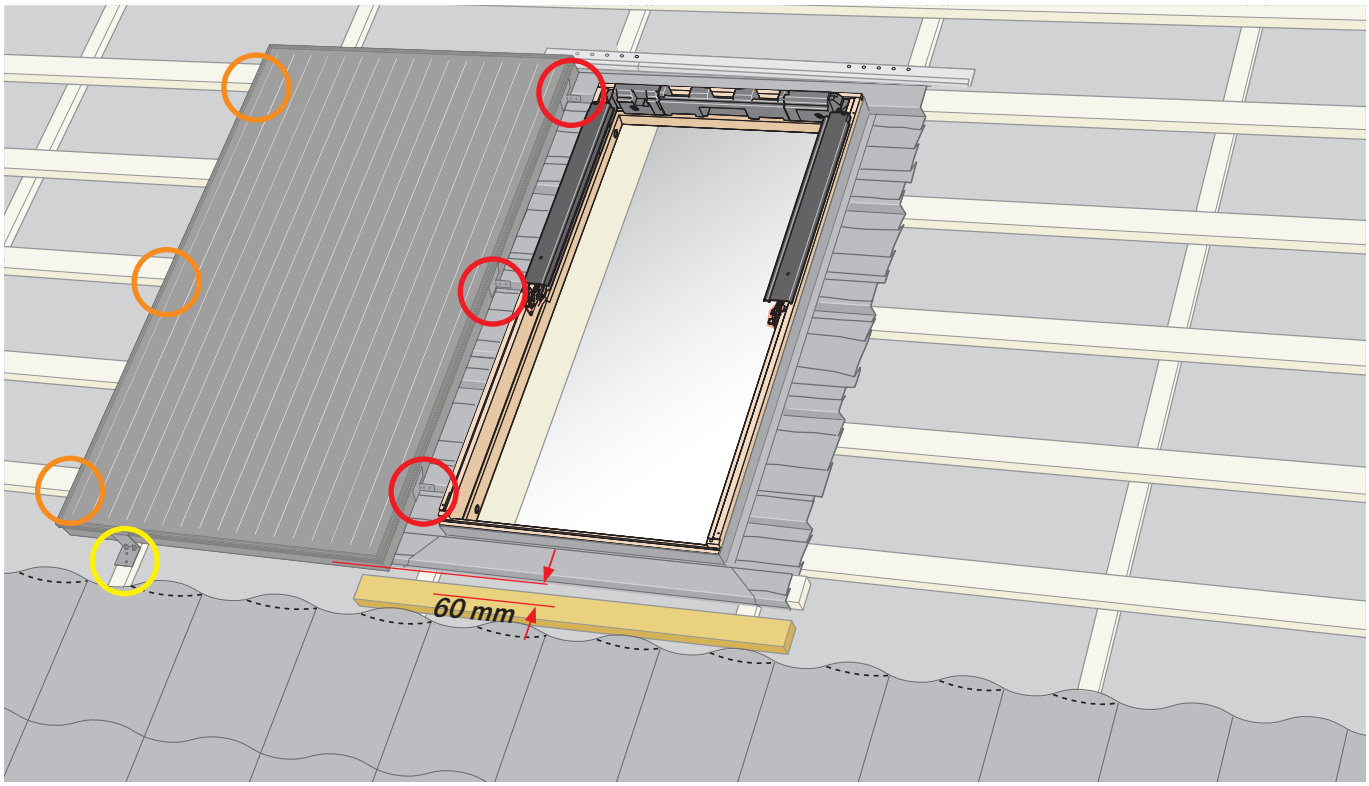

1c



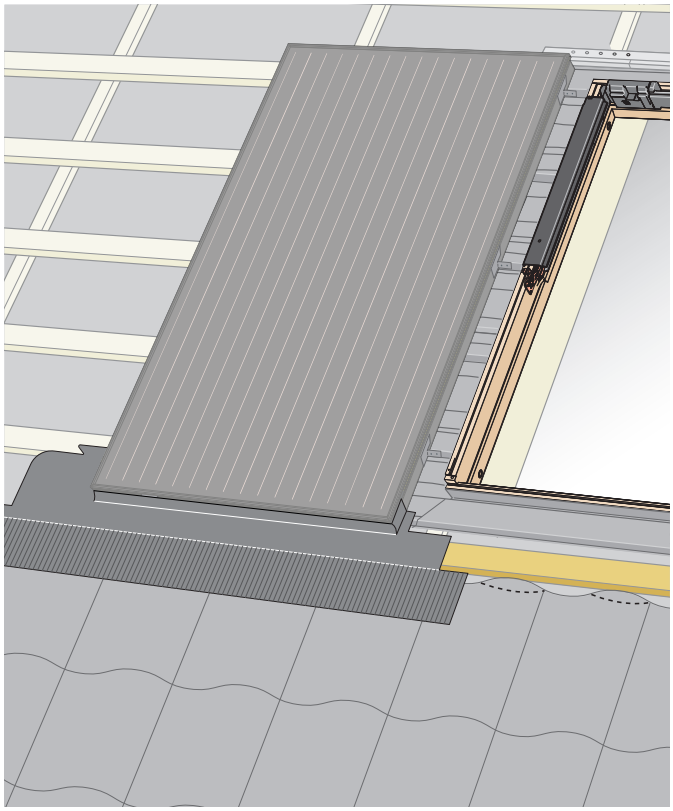

2c

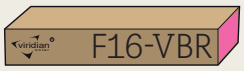

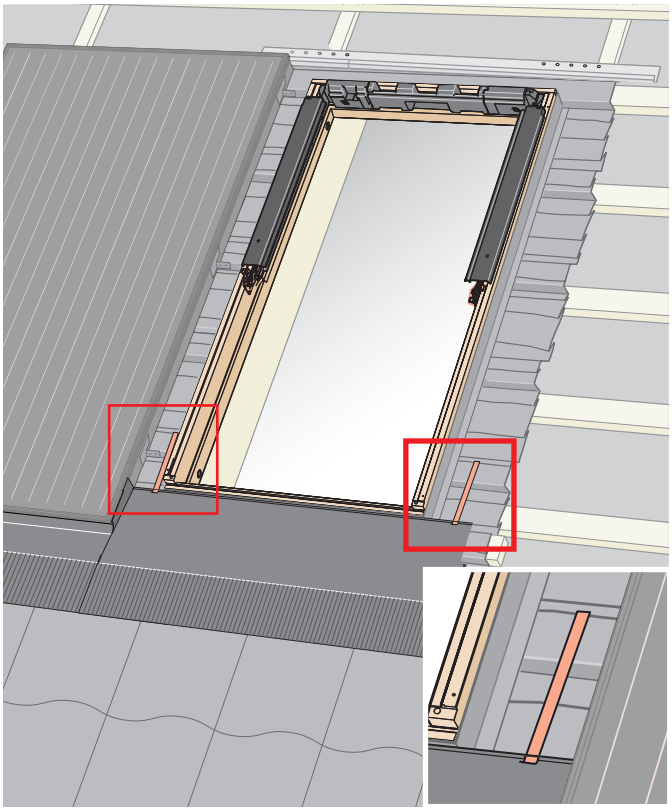

3c



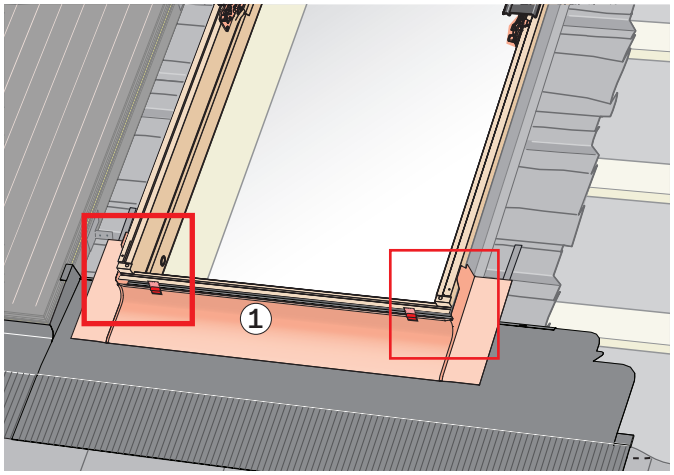

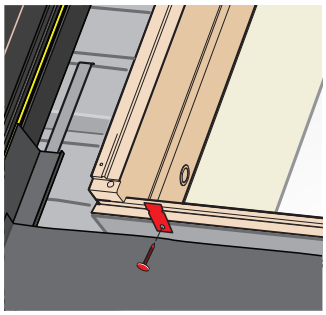

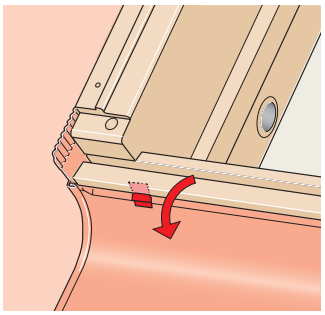

4c

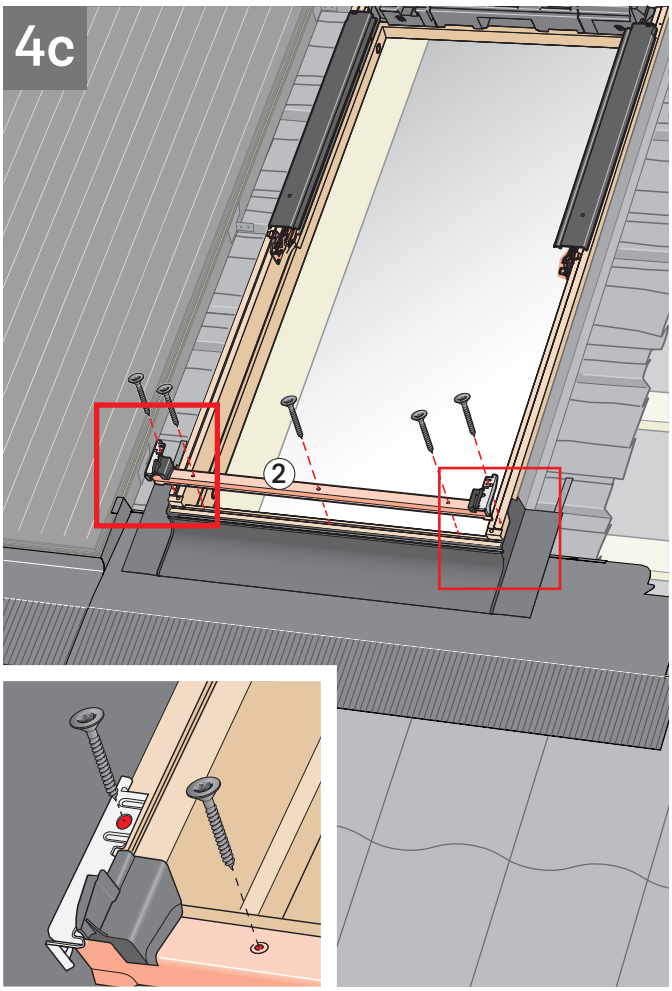

5b

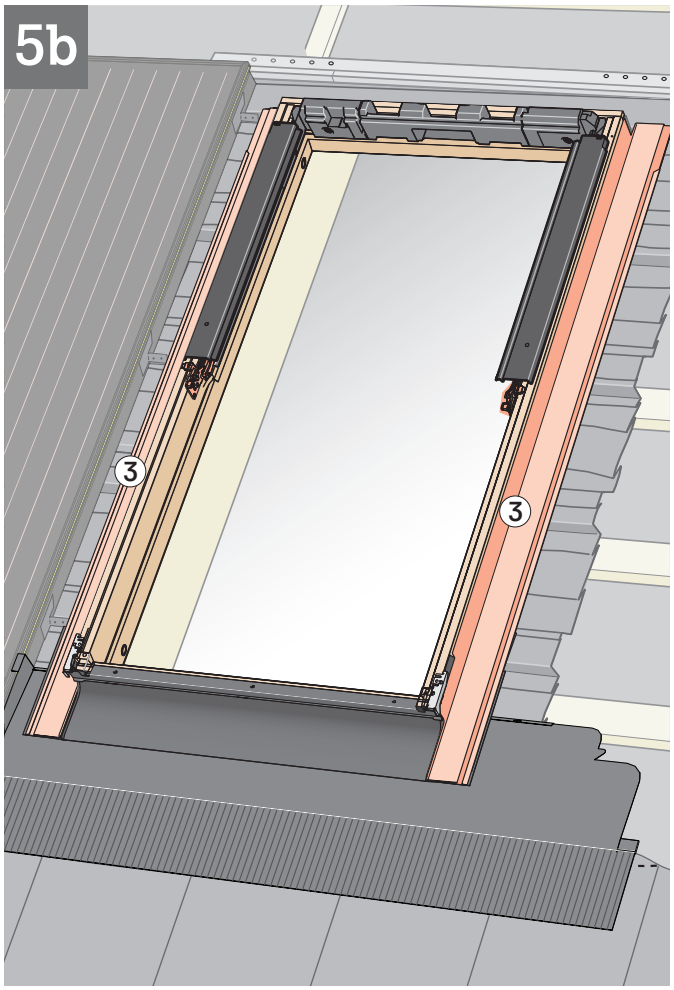

6c

Pages 16 - 18 17 → 21

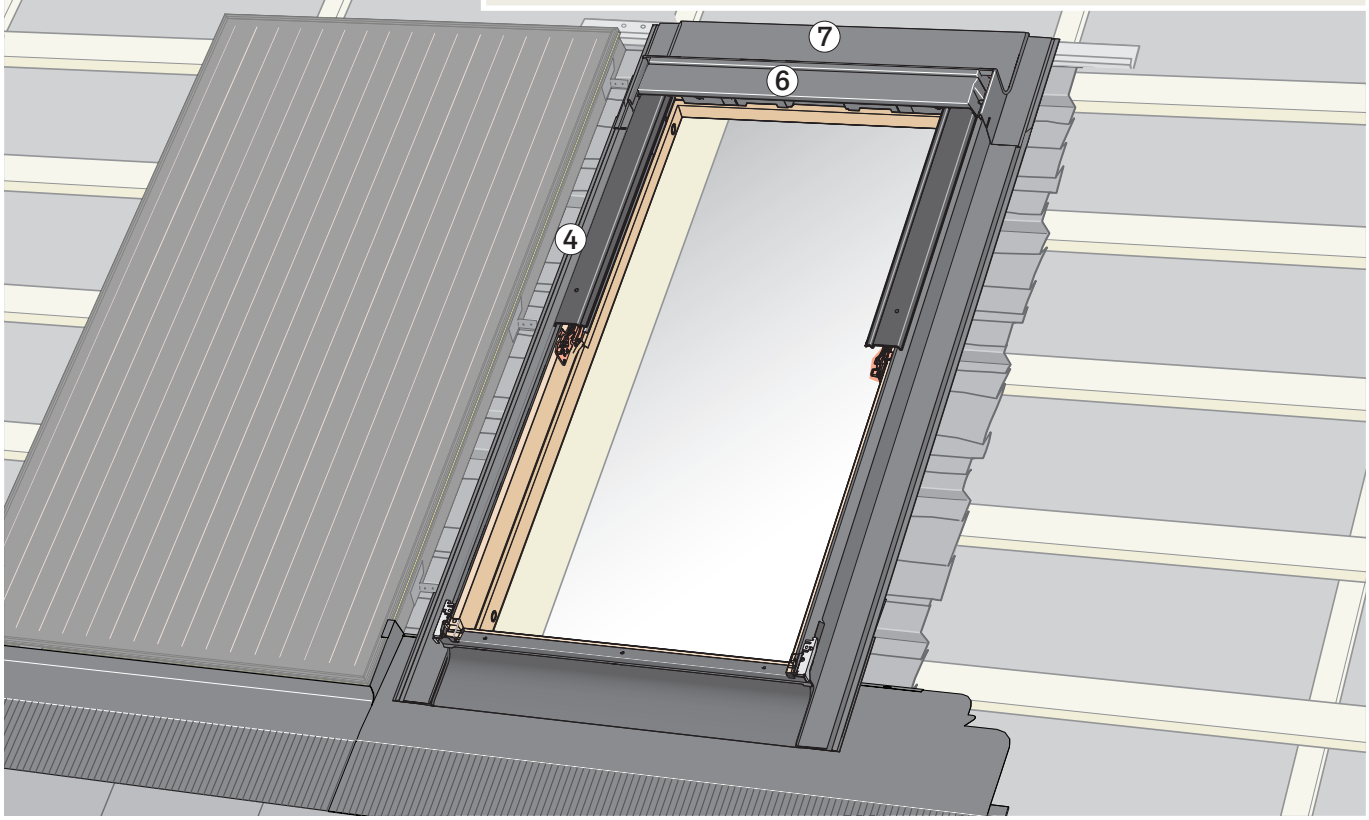

7c

Page 18 22

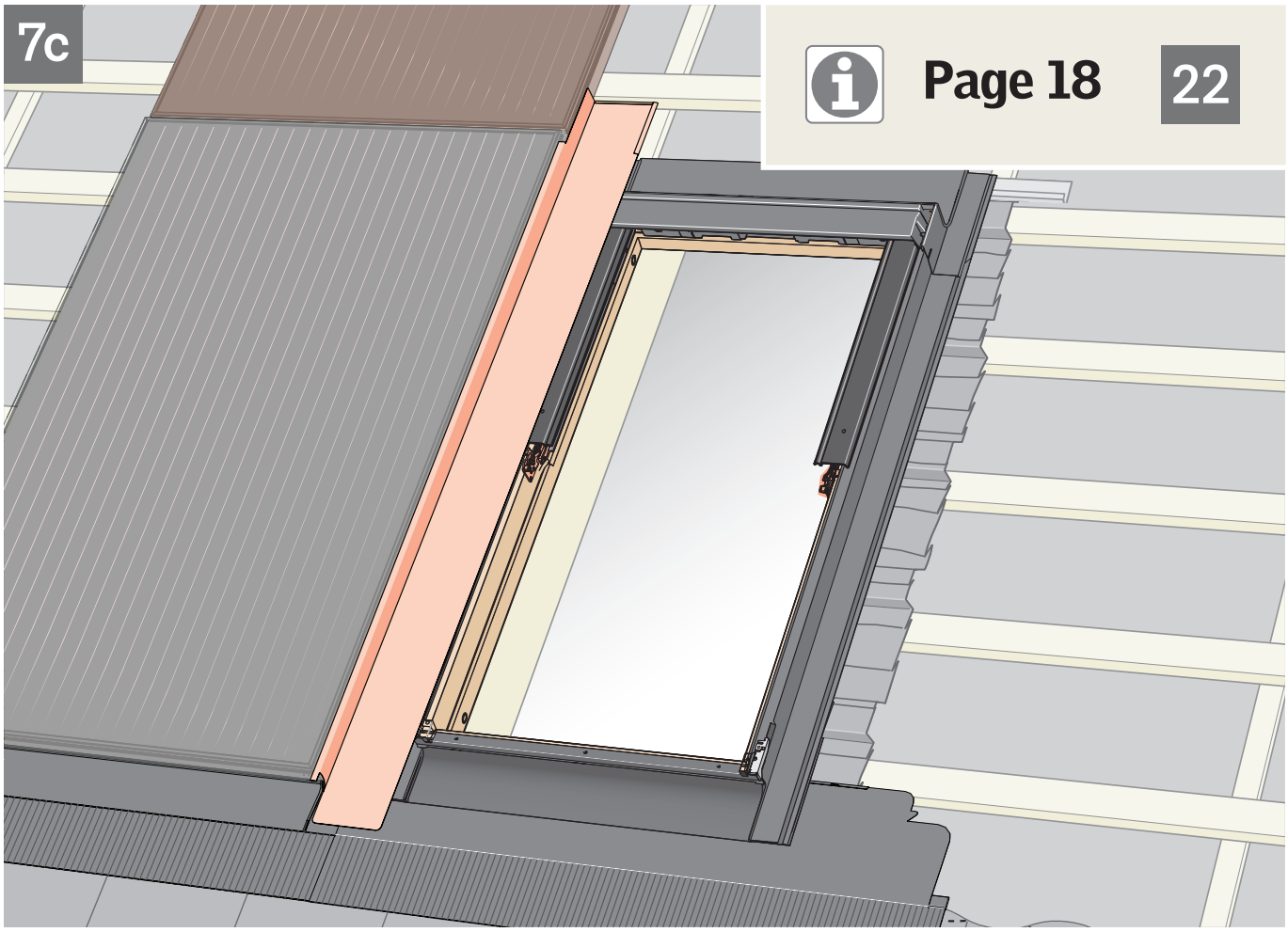

8c

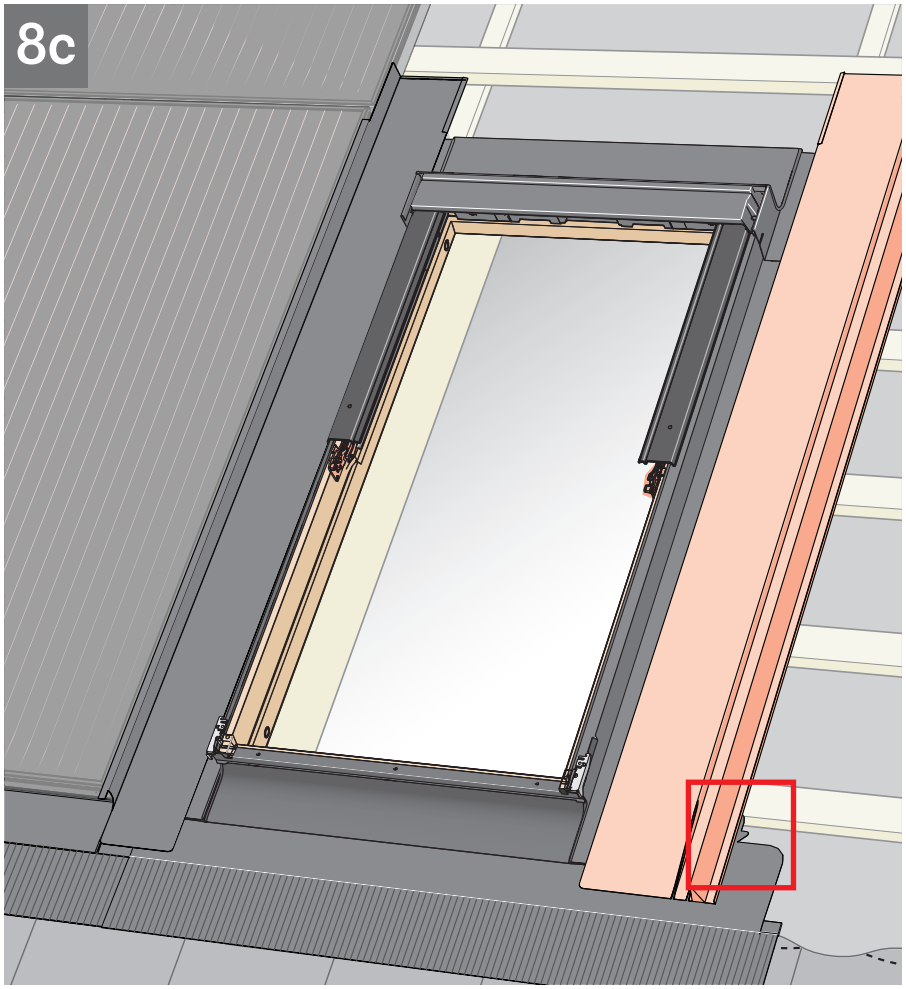

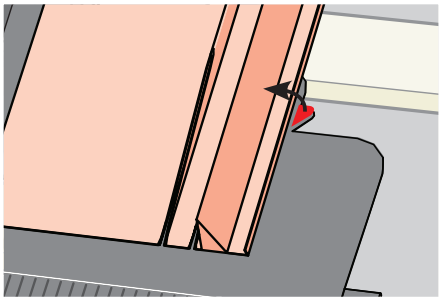

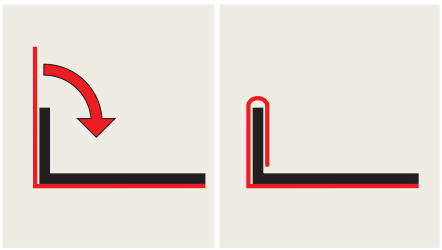

9c

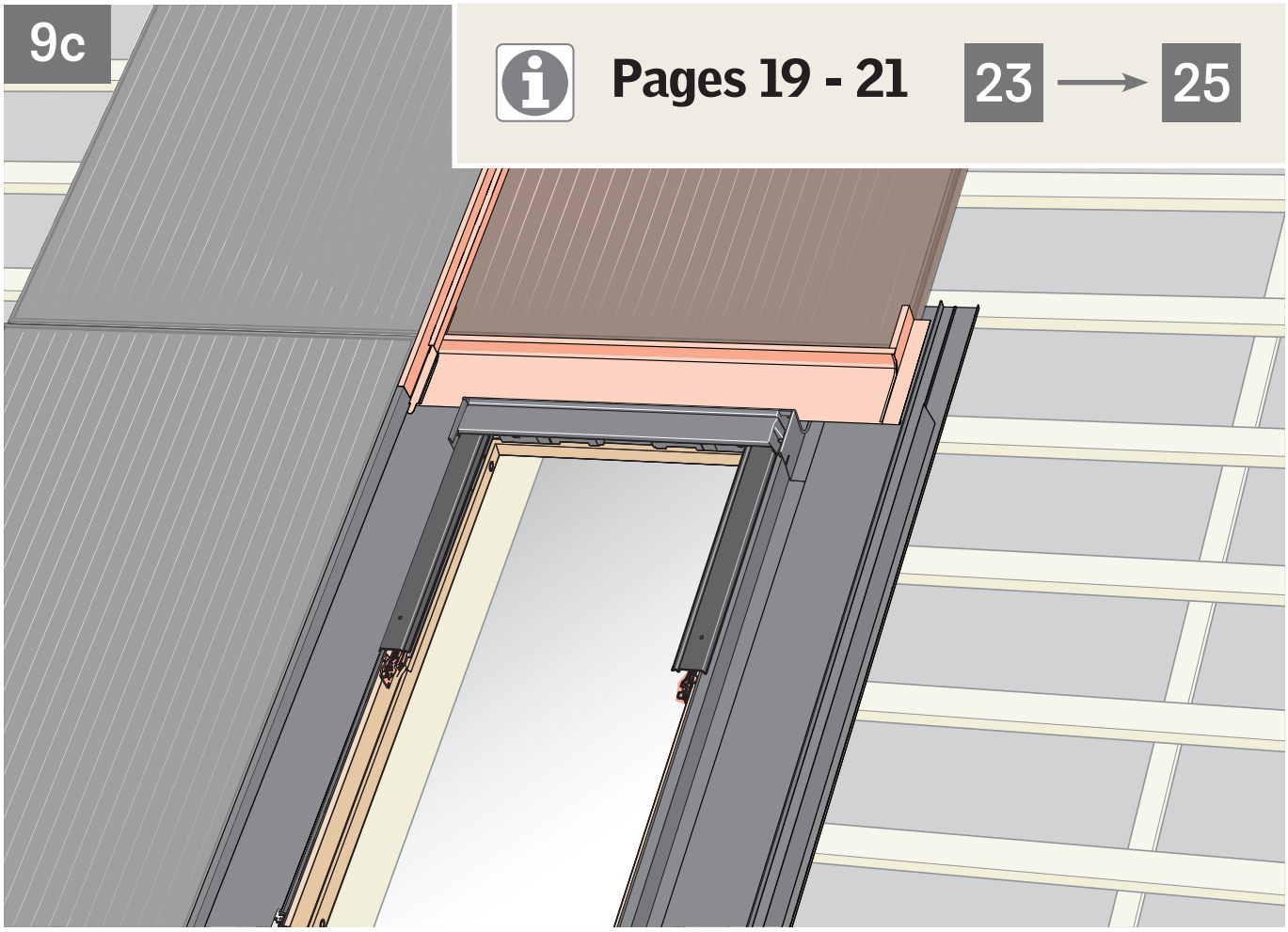

Pages 19 - 21 23 → 25

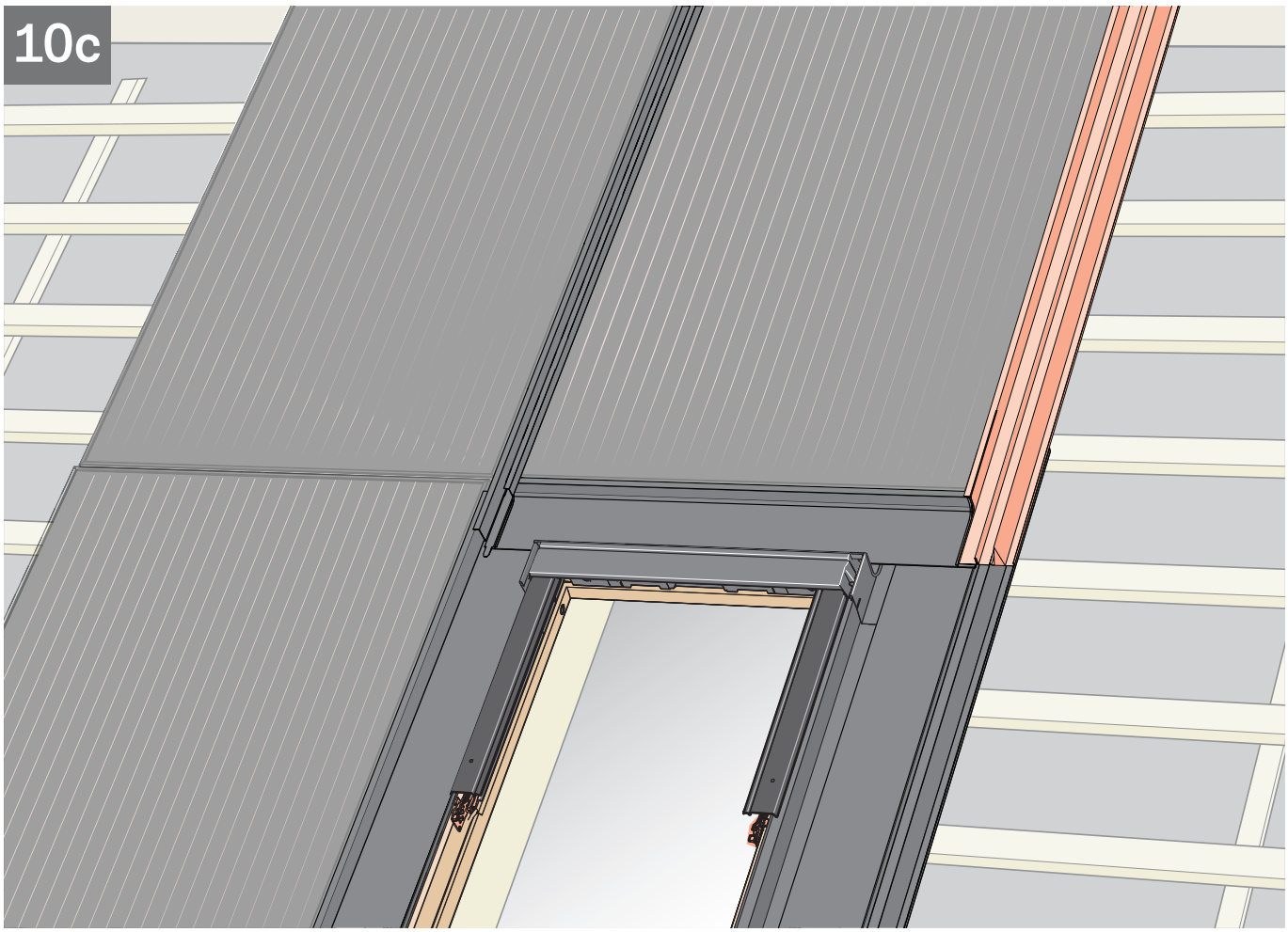
10c

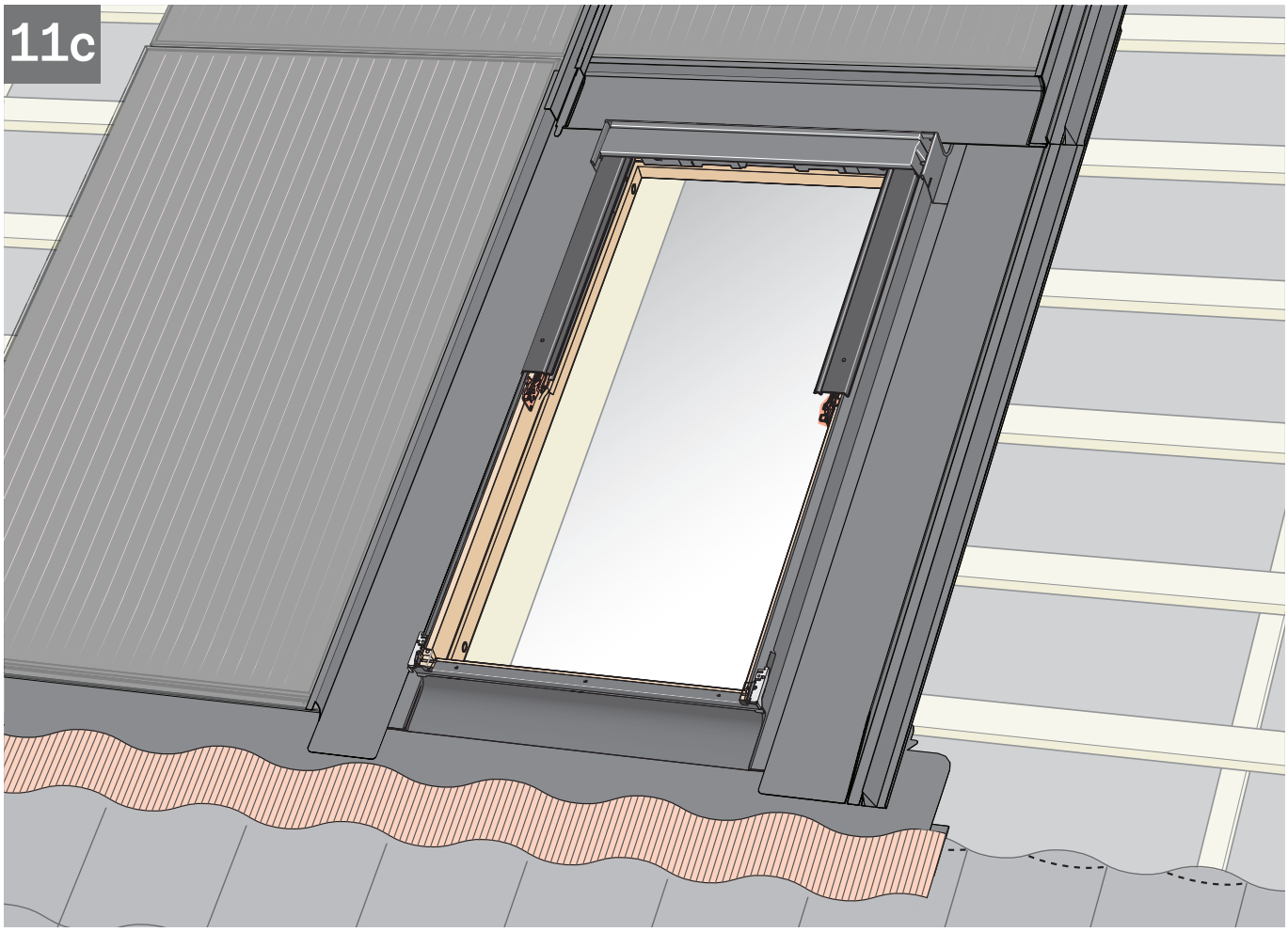
11c

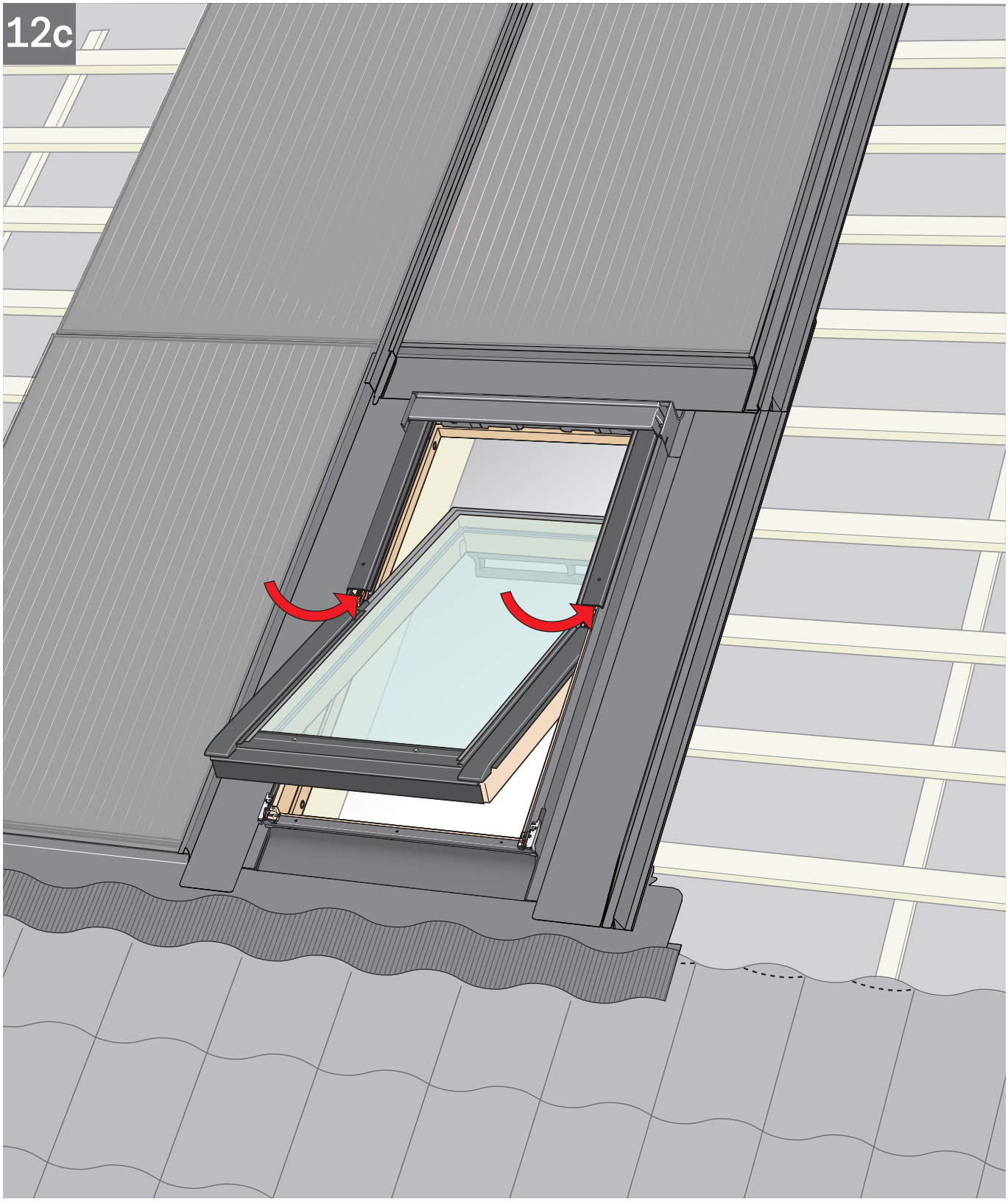
12c

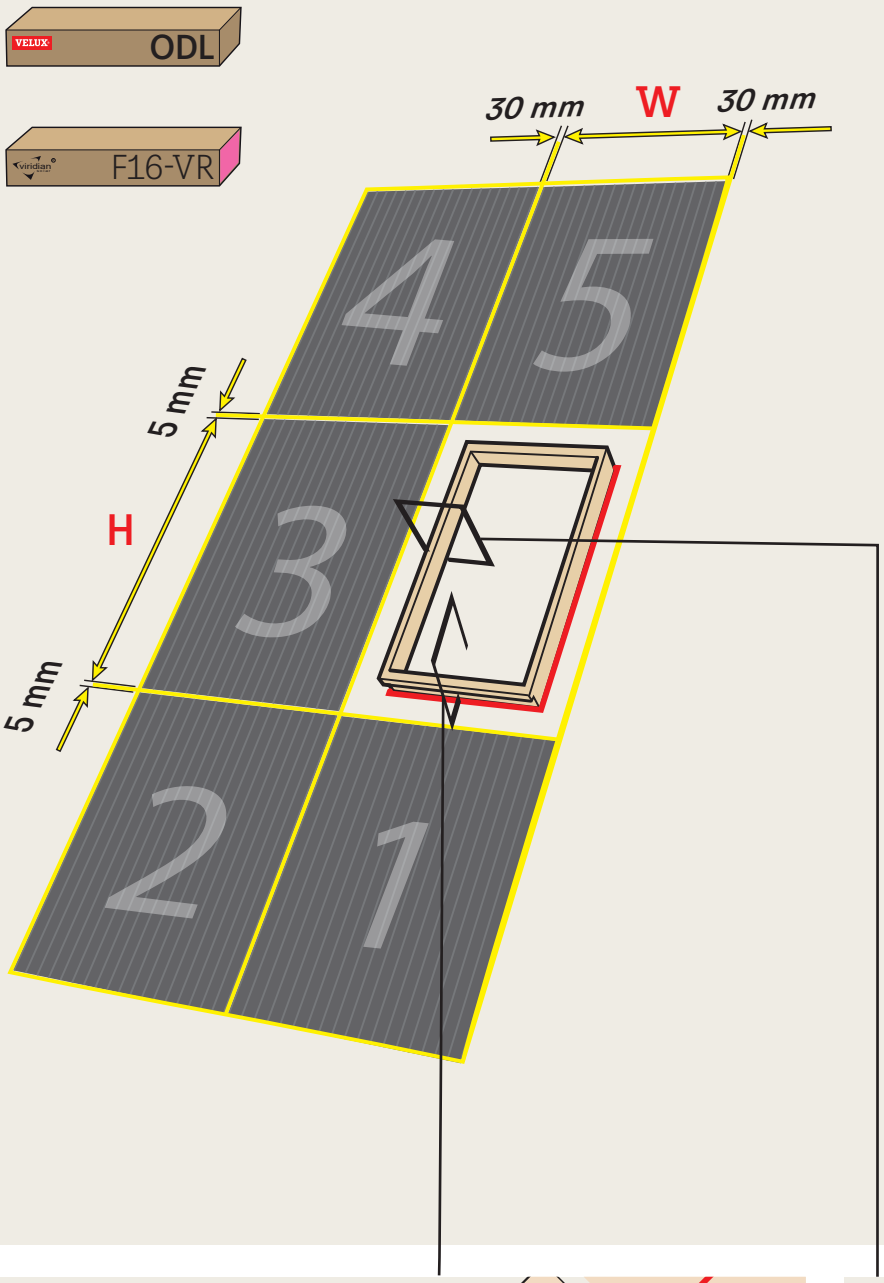

	W
Fusion	992 mm
G1	1000 mm
M10	1134 mm

	H
Fusion	1640 mm
G1	1686 mm
M10	1722 mm

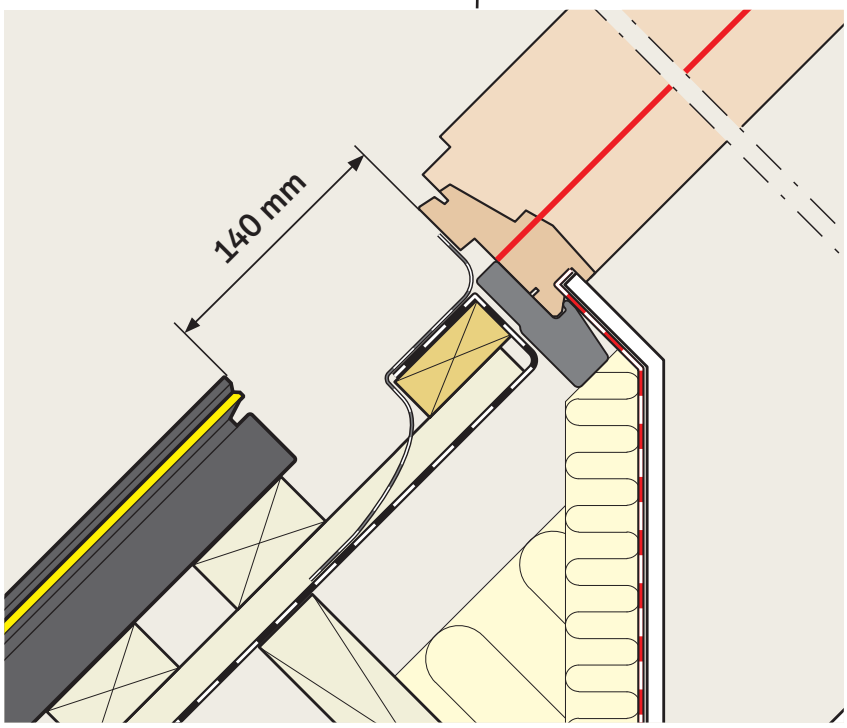

	X
Fusion	136 mm
G1	140 mm
M10	207 mm

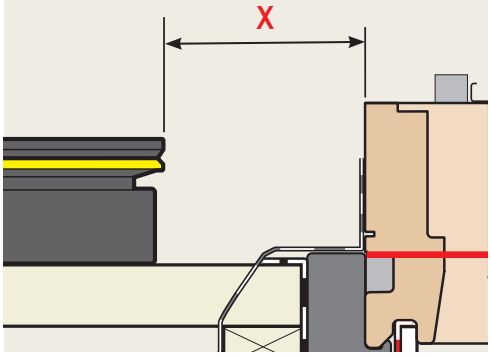

Pages 6 - 10 1 → 9

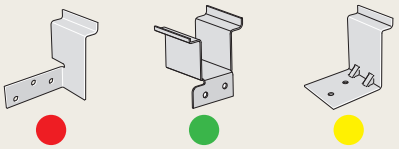

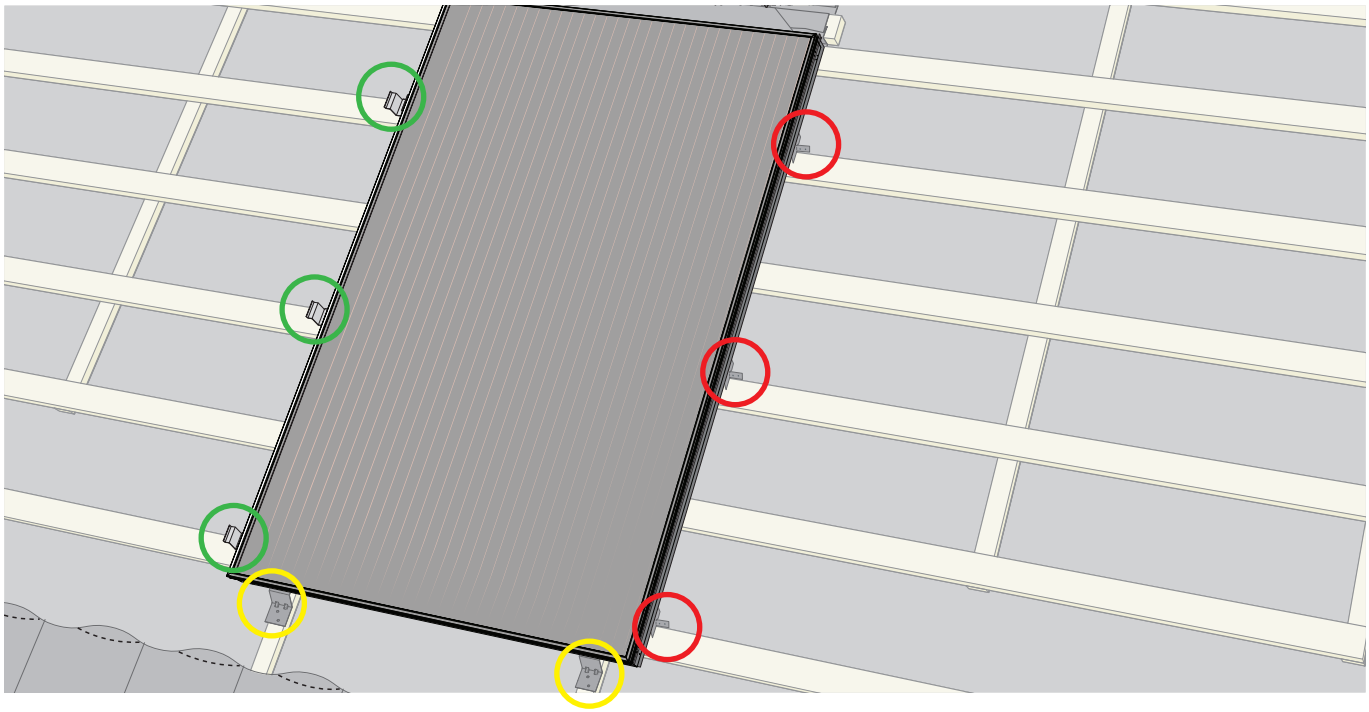

1d

Pages 10 - 12 9 → 11



2d

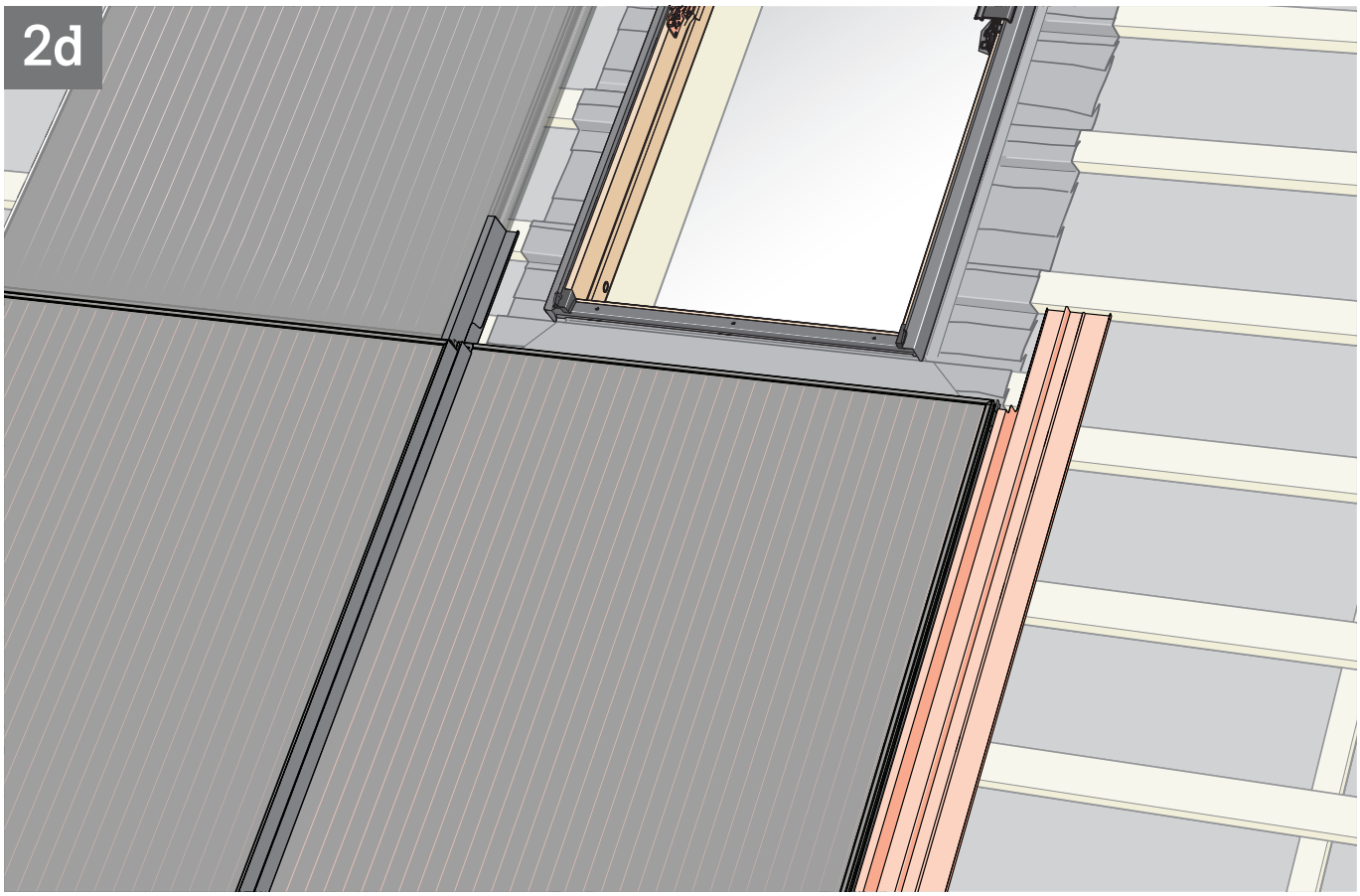

3d

Pages 14 - 15 13 → 15

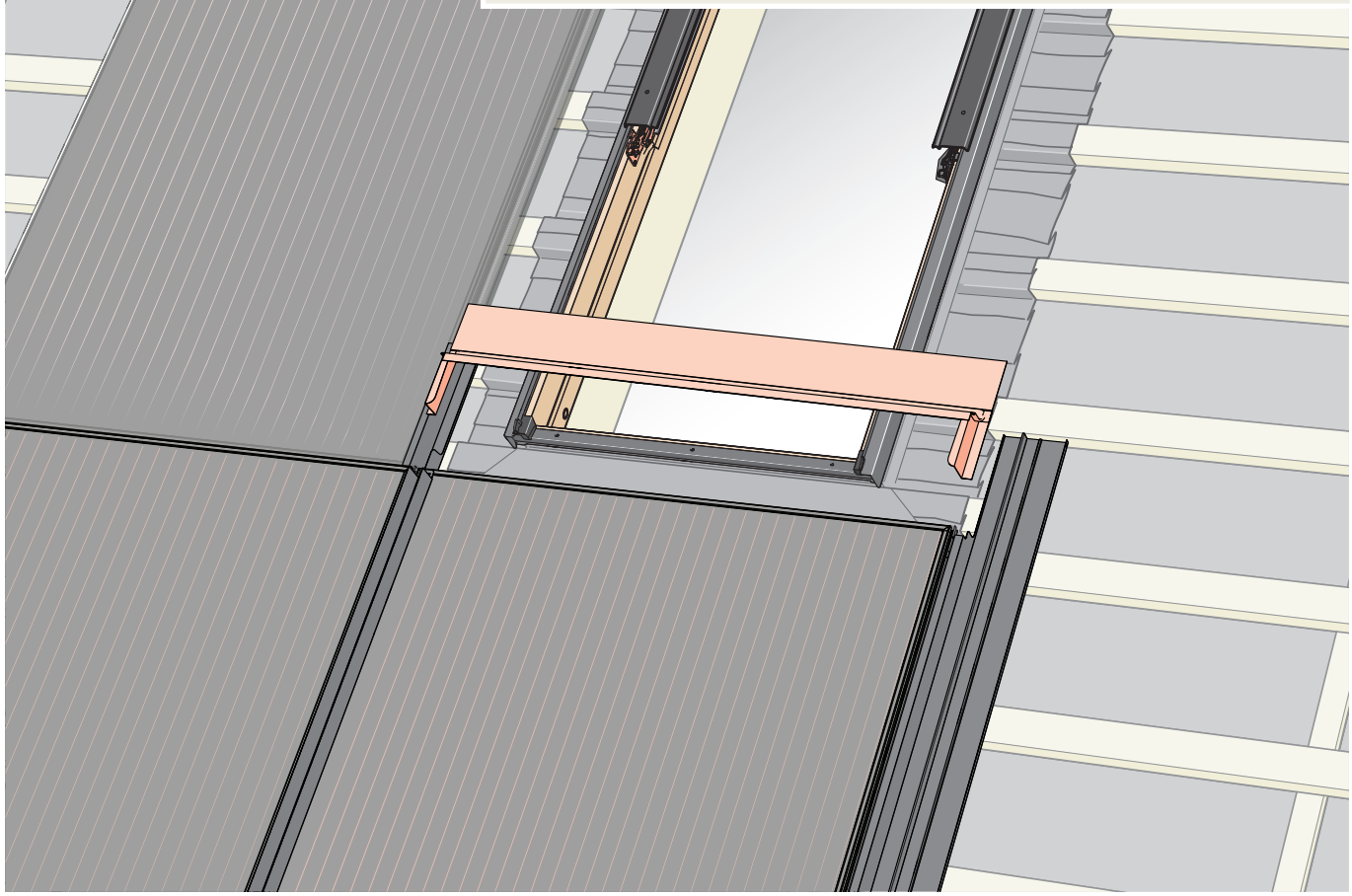

4d

Pages 15 - 18 16 → 22

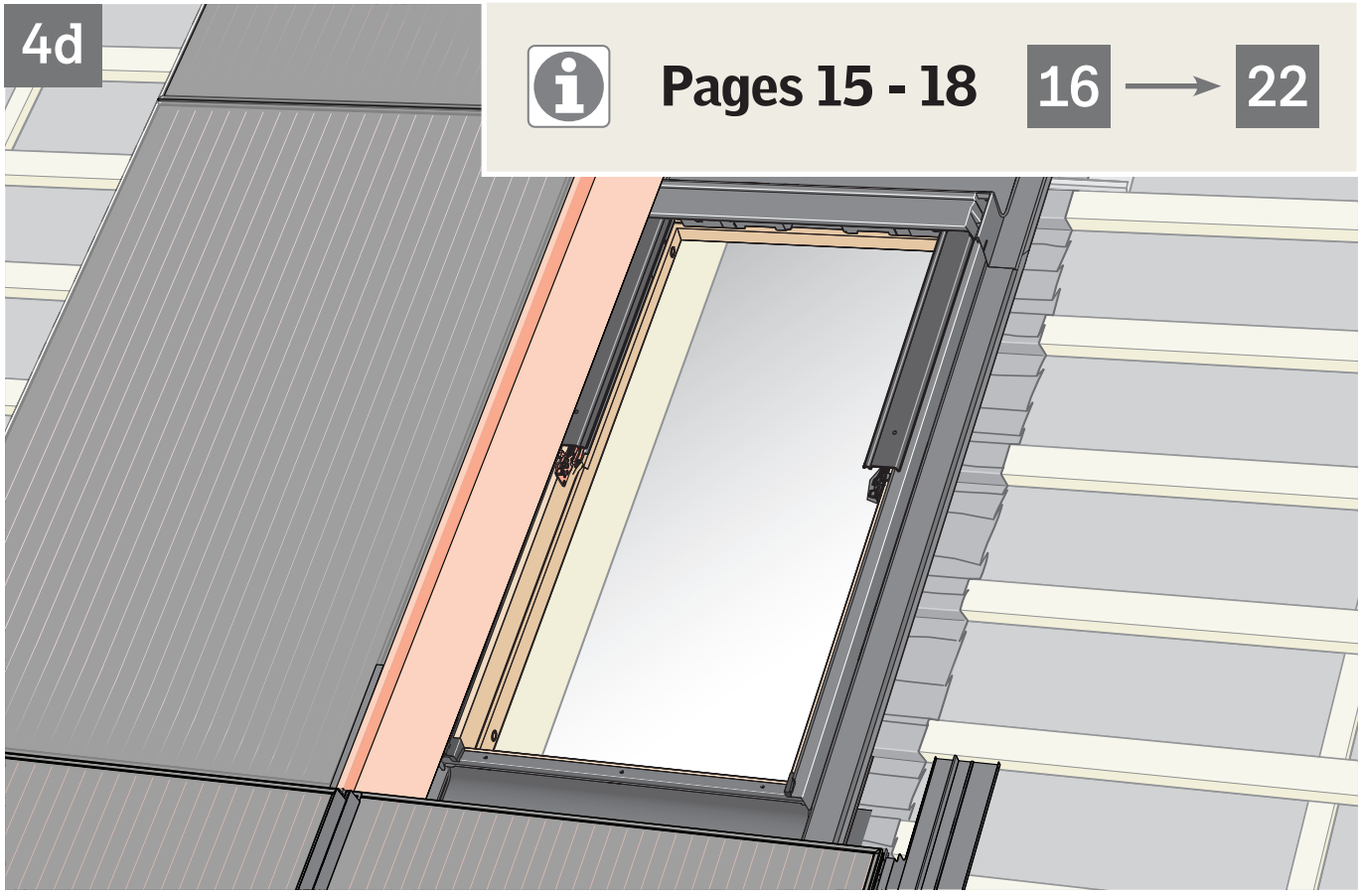

5d

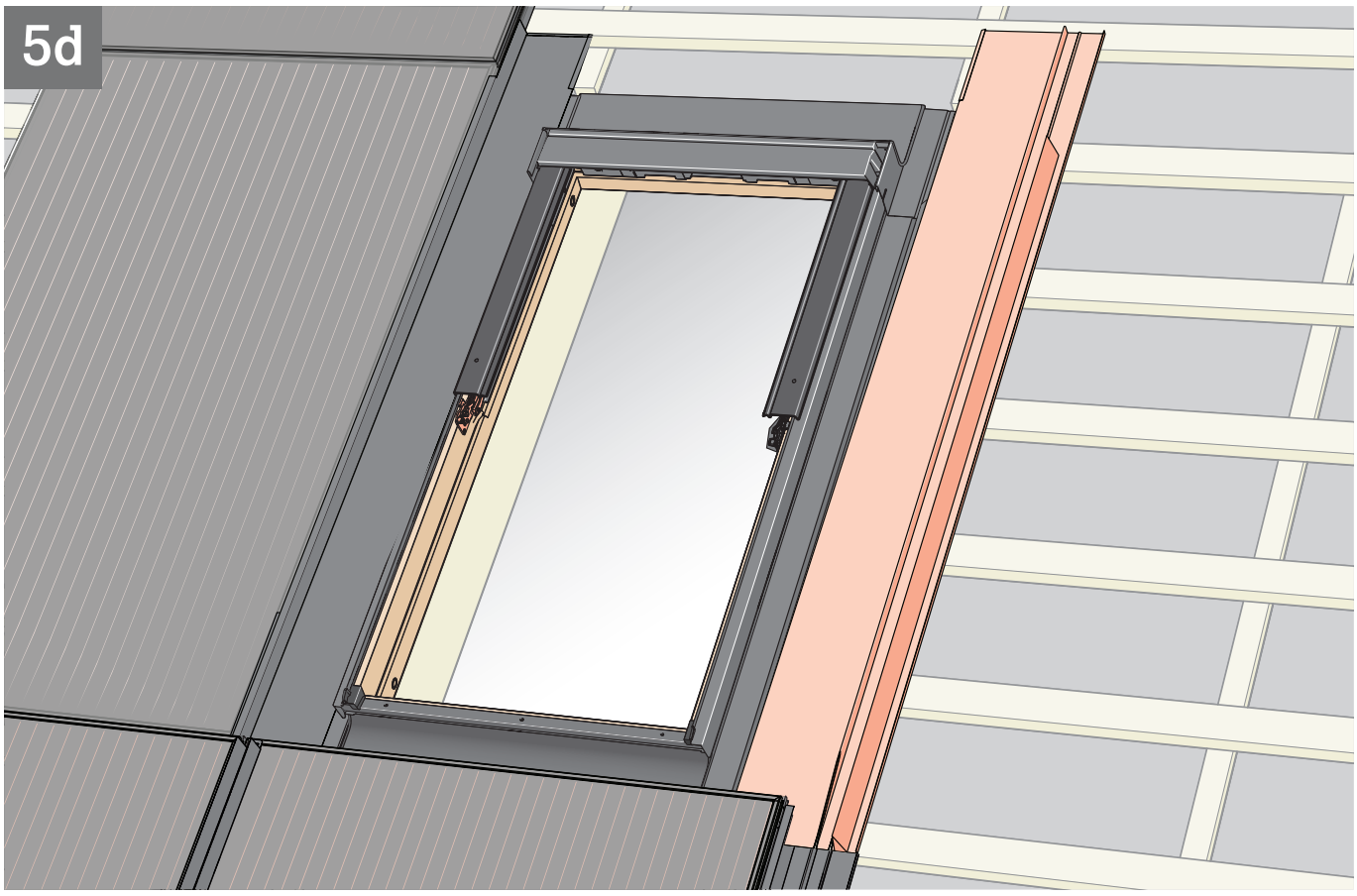

6d

Pages 19 - 21 23 → 25

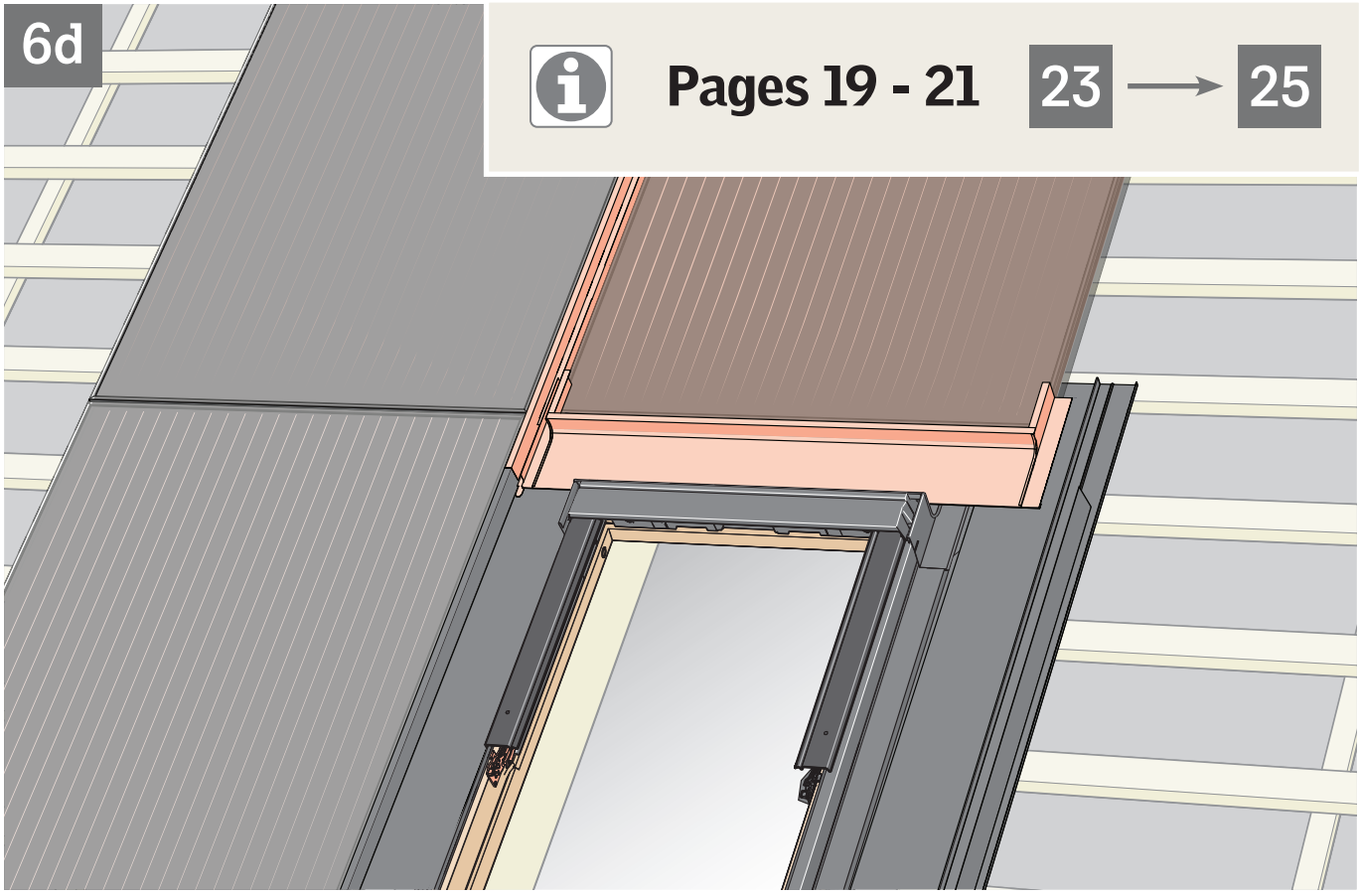

7d

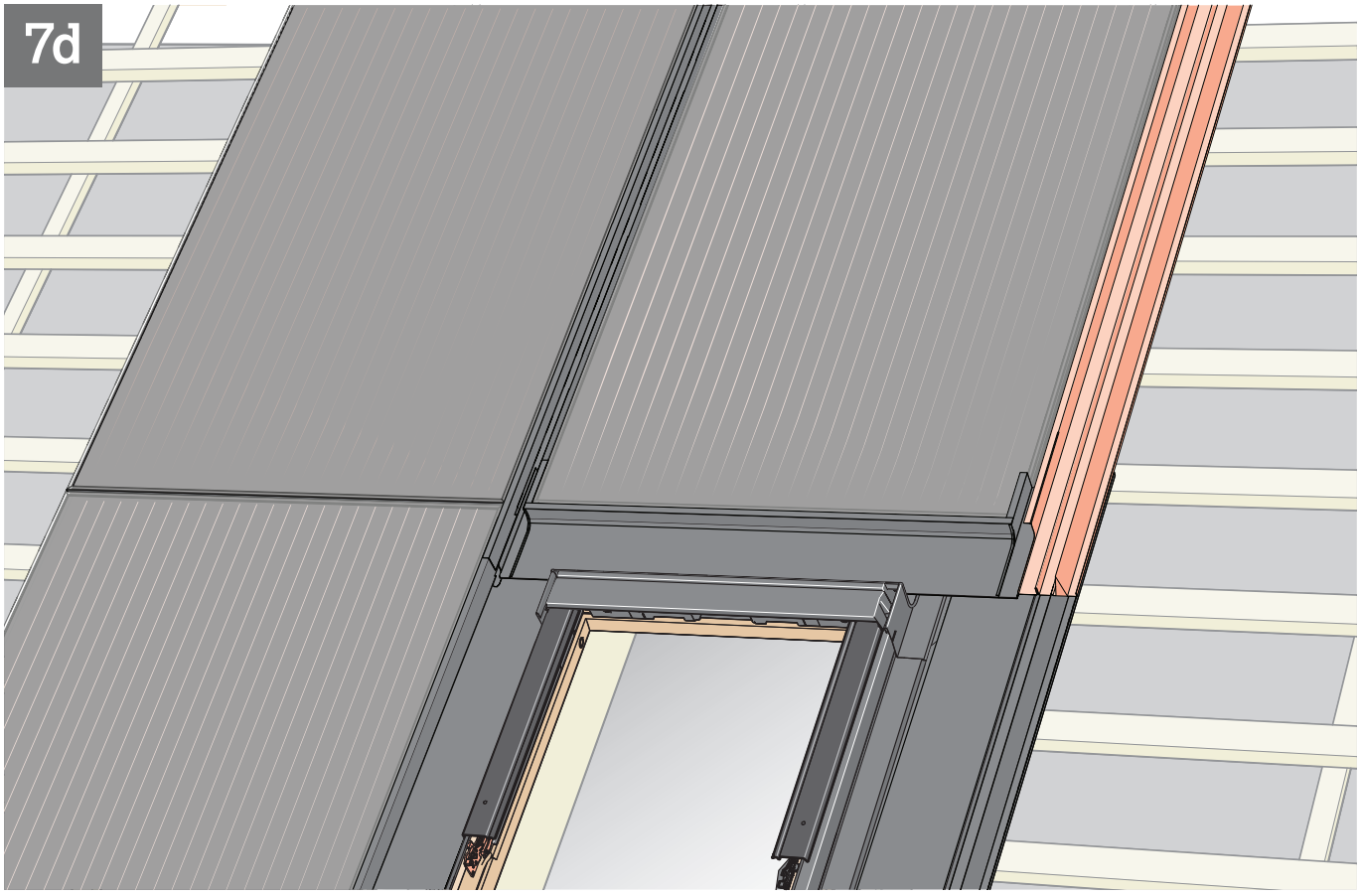

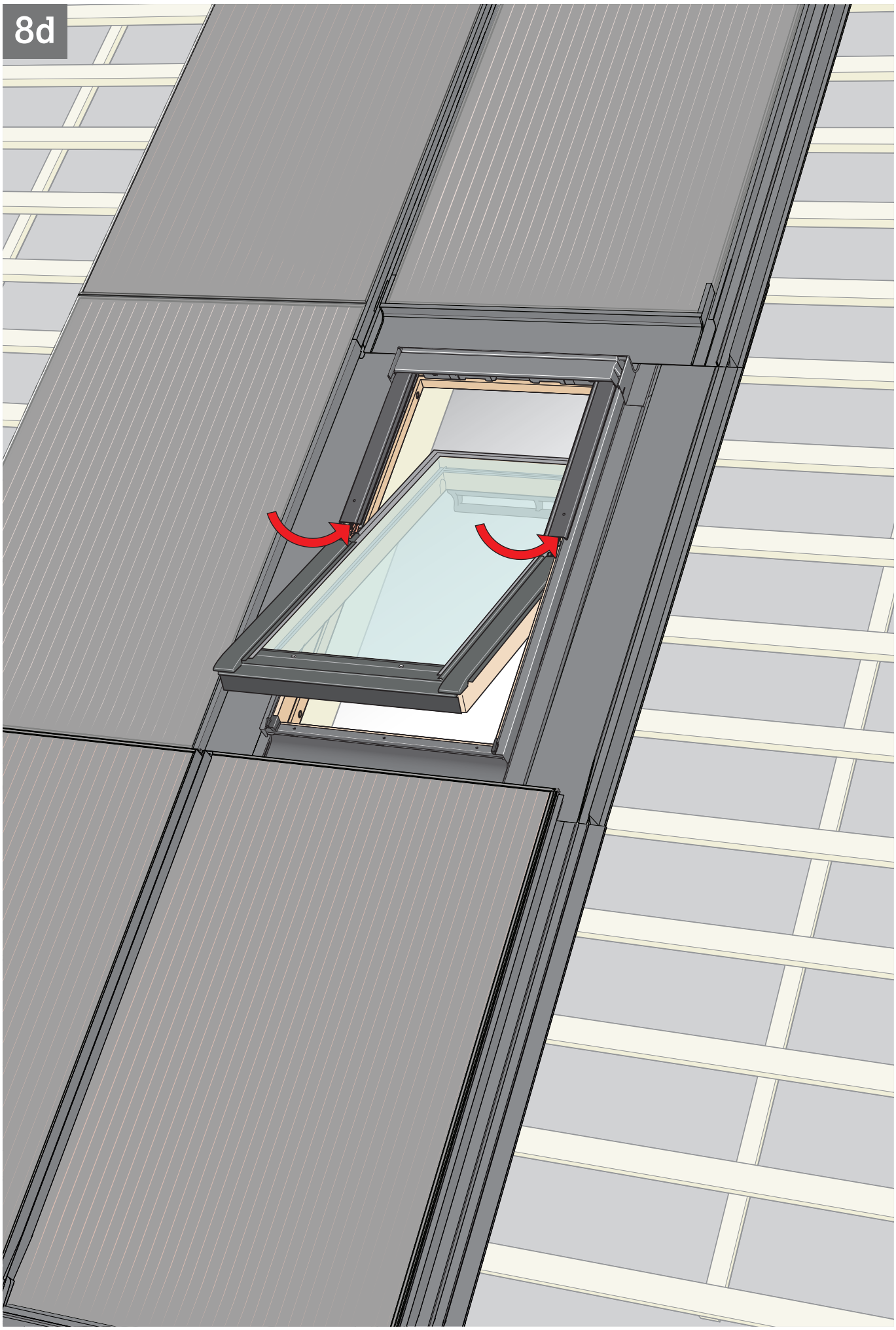
8d

VELUX®

www.velux.com

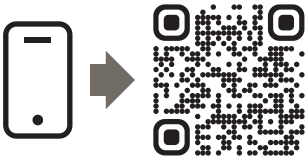

velux.com/contact

INSTALLATION INSTRUCTIONS FOR ODL FOR VIRIDIAN. ©2020.2026 VELUX GROUP. ®VELUX AND THE VELUX LOGO ARE REGISTERED TRADEMARKS USED UNDER LICENCE BY THE VELUX GROUP