VELUX®
Commercial

HVC AB + KCD 0040/0080

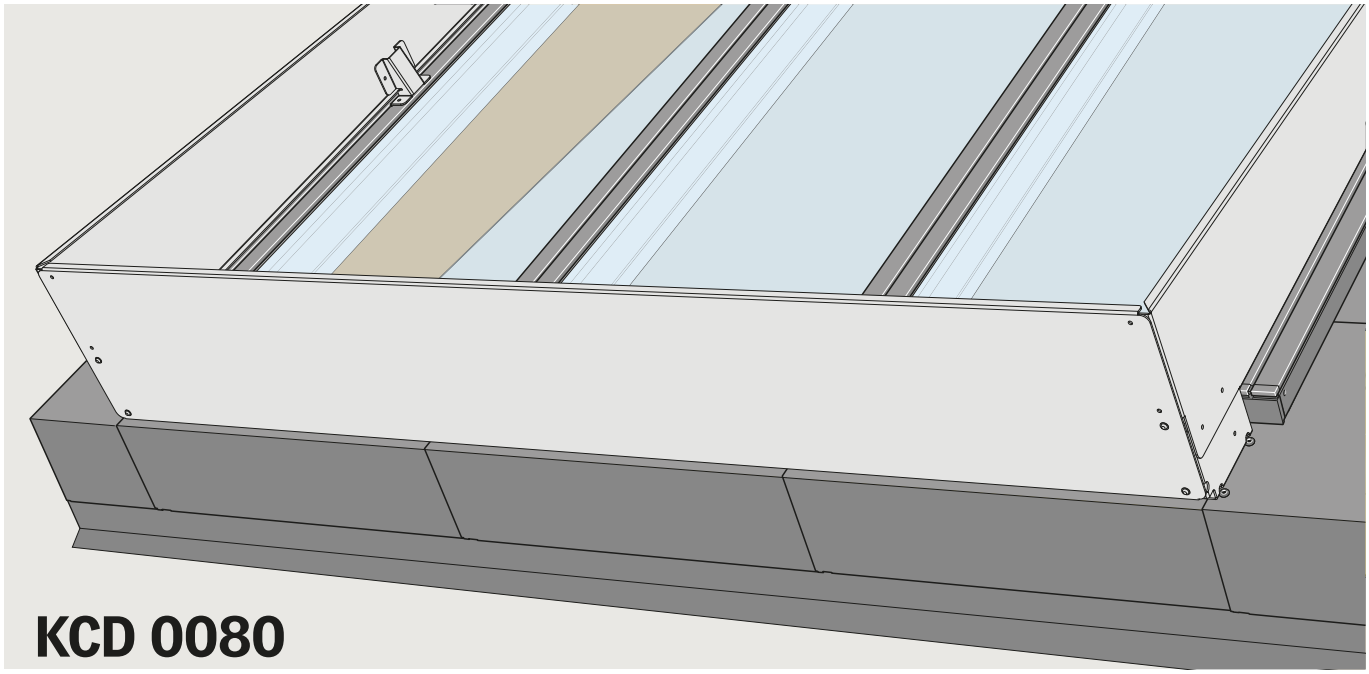

KCD 0080

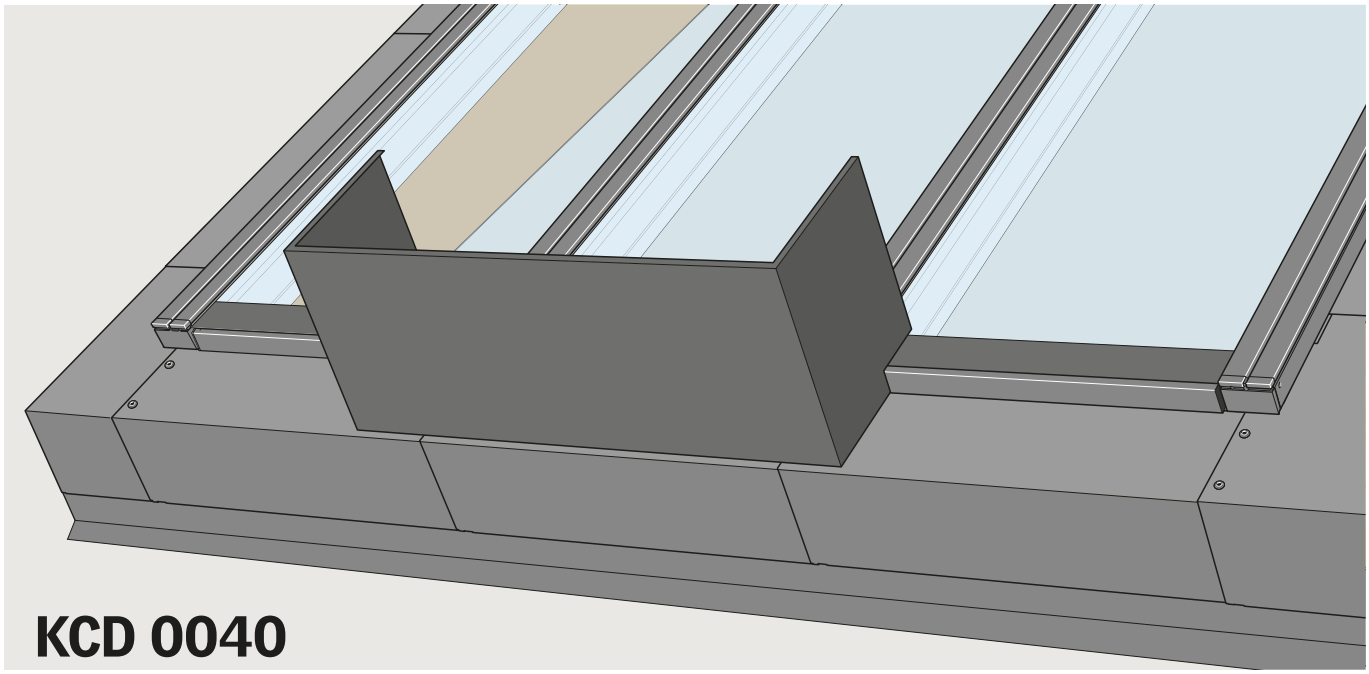

KCD 0040

VAS 454455-2025-07

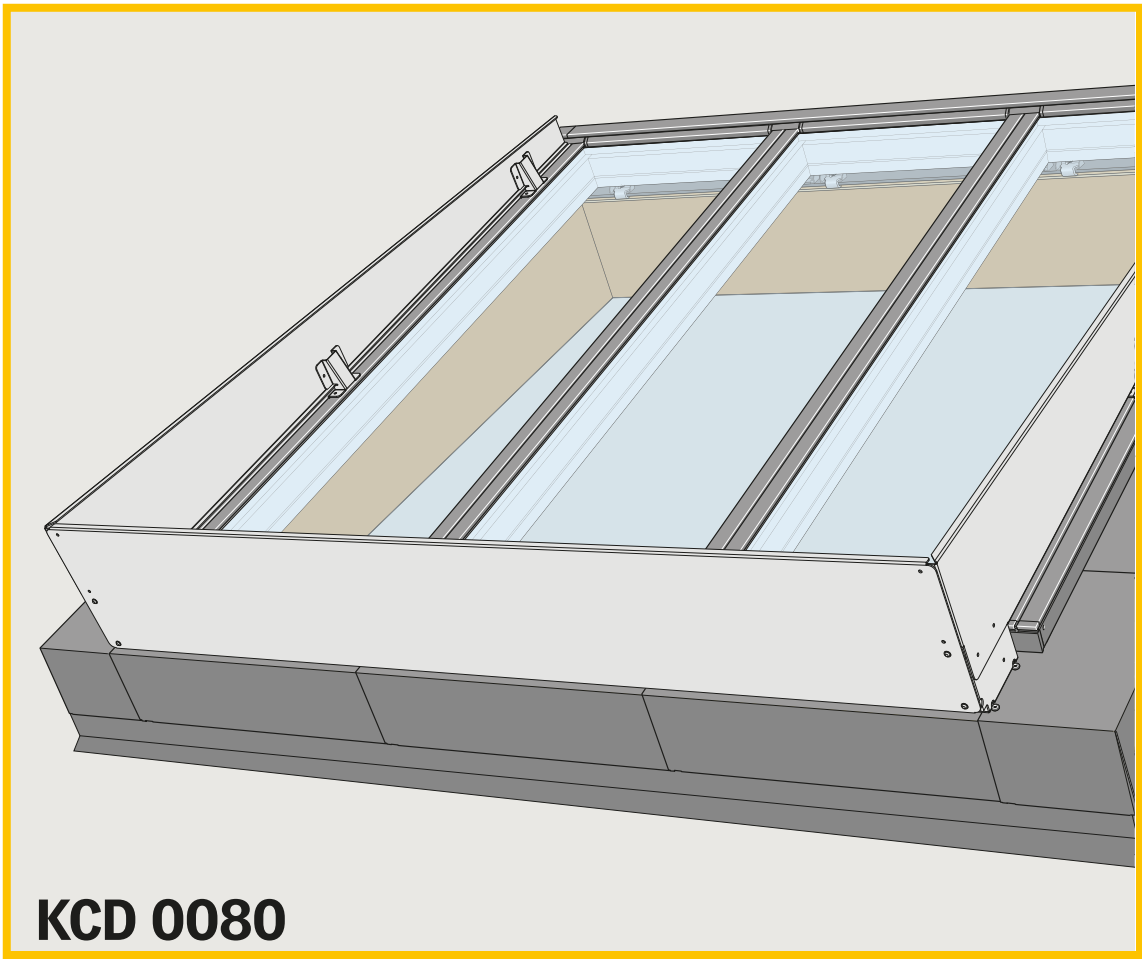

KCD 0080

Pages
4-17

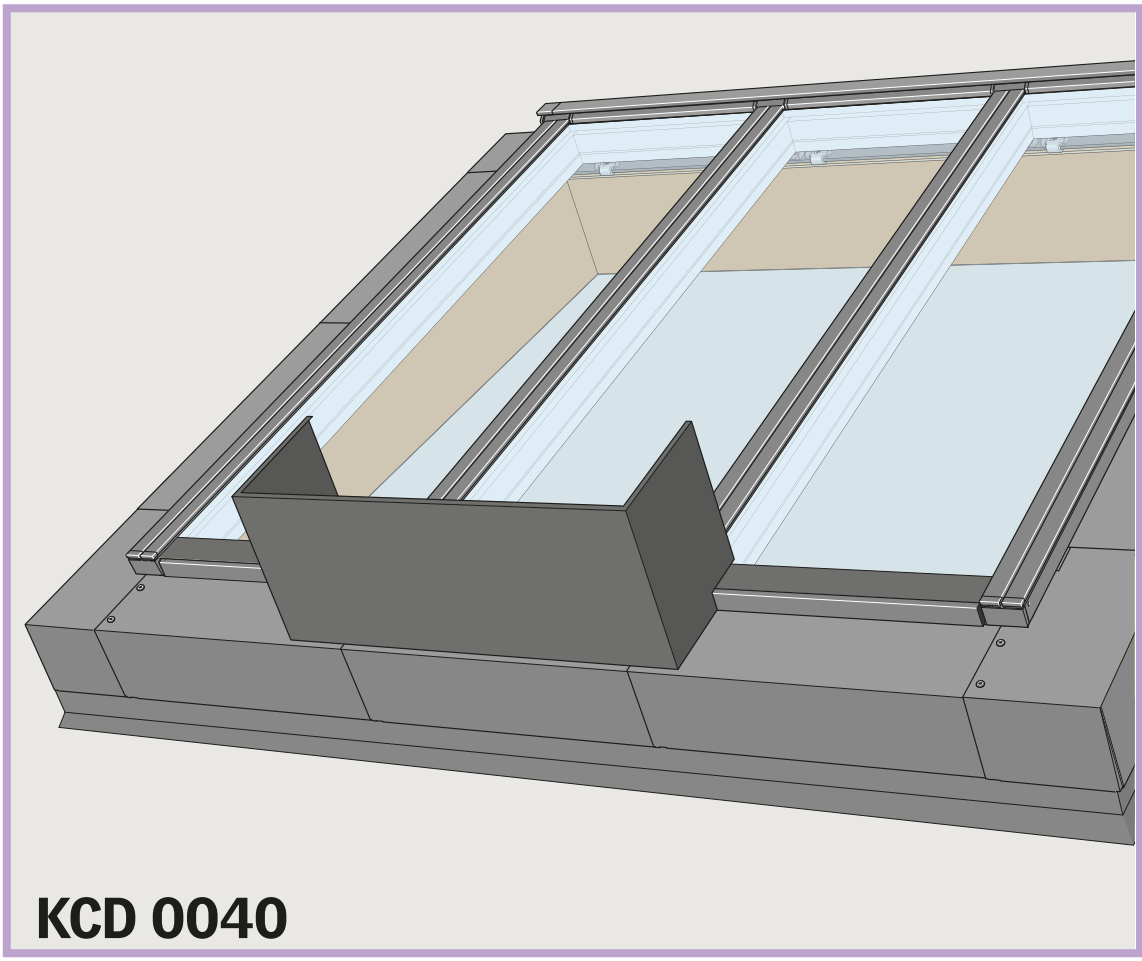

KCD 0040

Pages
18-26

F2-

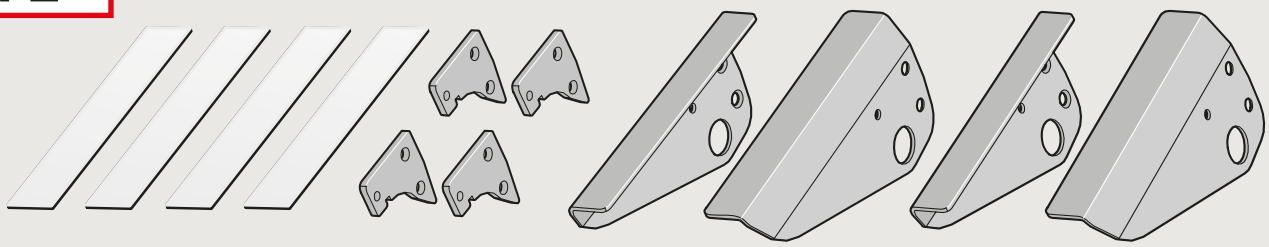

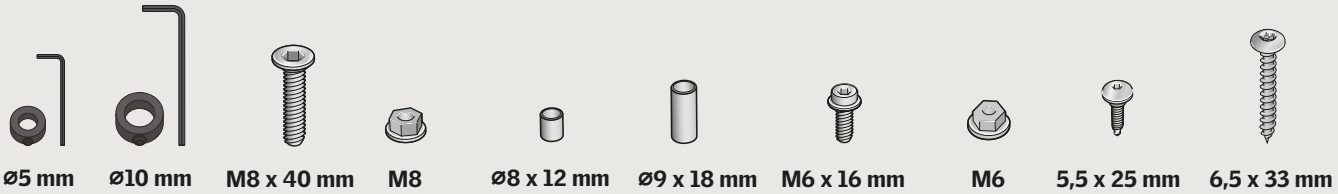
ø5 mm
ø10 mm
M8 x 40 mm
M8
ø8 x 12 mm
ø9 x 18 mm
M6 x 16 mm
M6
5,5 x 25 mm
6,5 x 33 mm

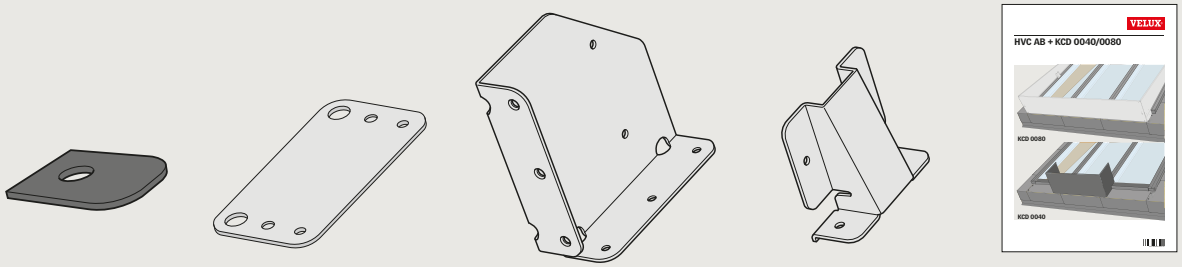
VELUX
HVC AB + KCD 0040/0080
KCD 0080
KCD 0040

KCD

F3-

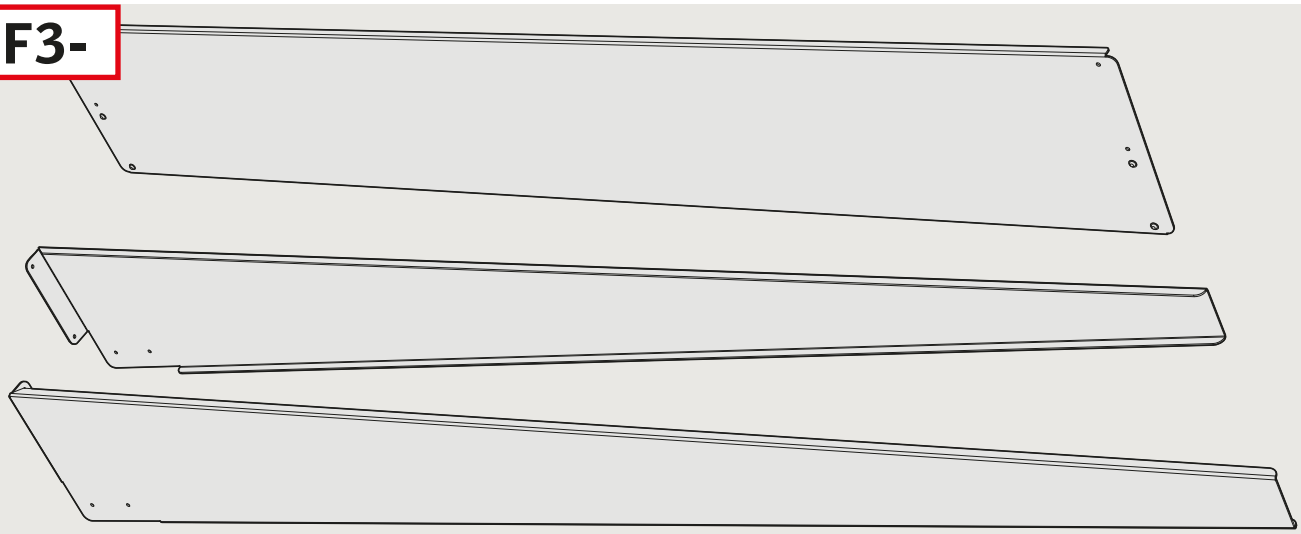

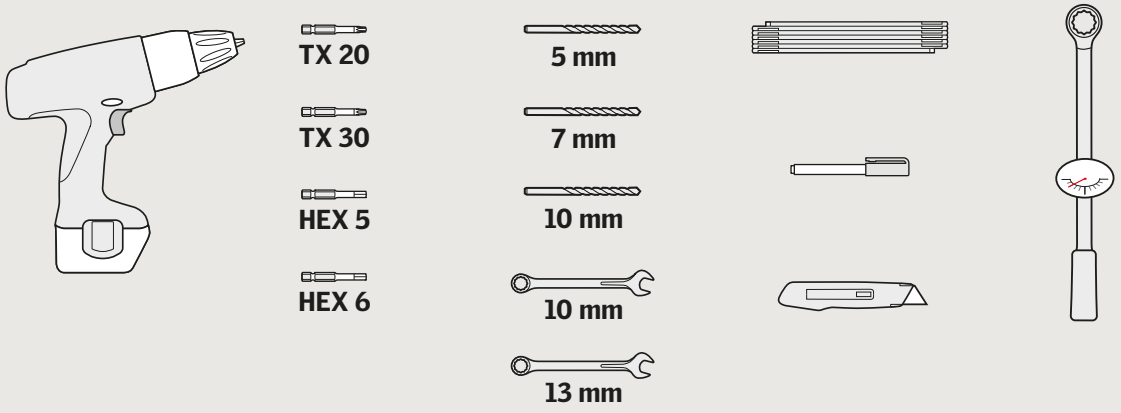
TX 20
TX 30
HEX 5
HEX 6
5 mm
7 mm
10 mm
10 mm
13 mm

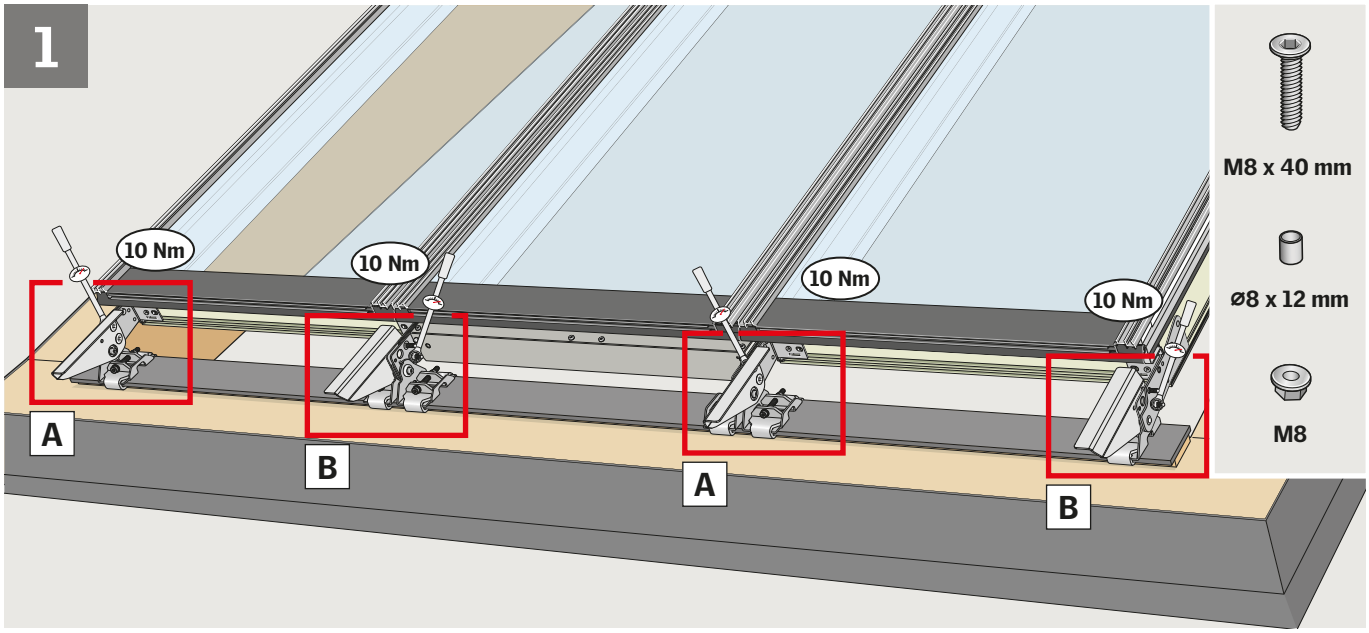

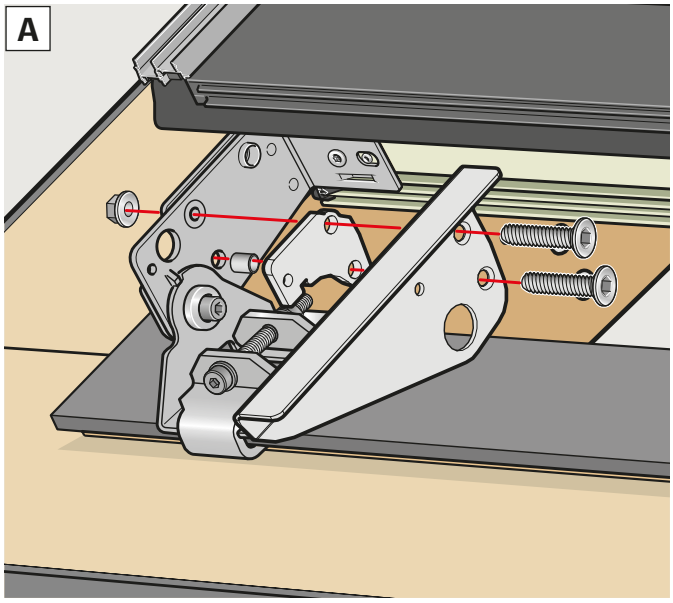

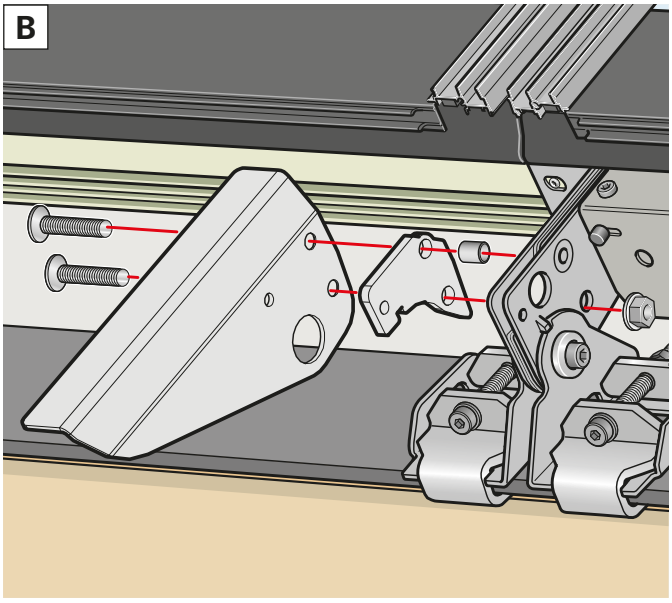





13 → 18



27 → 33



15 → 21



23 → 30

2

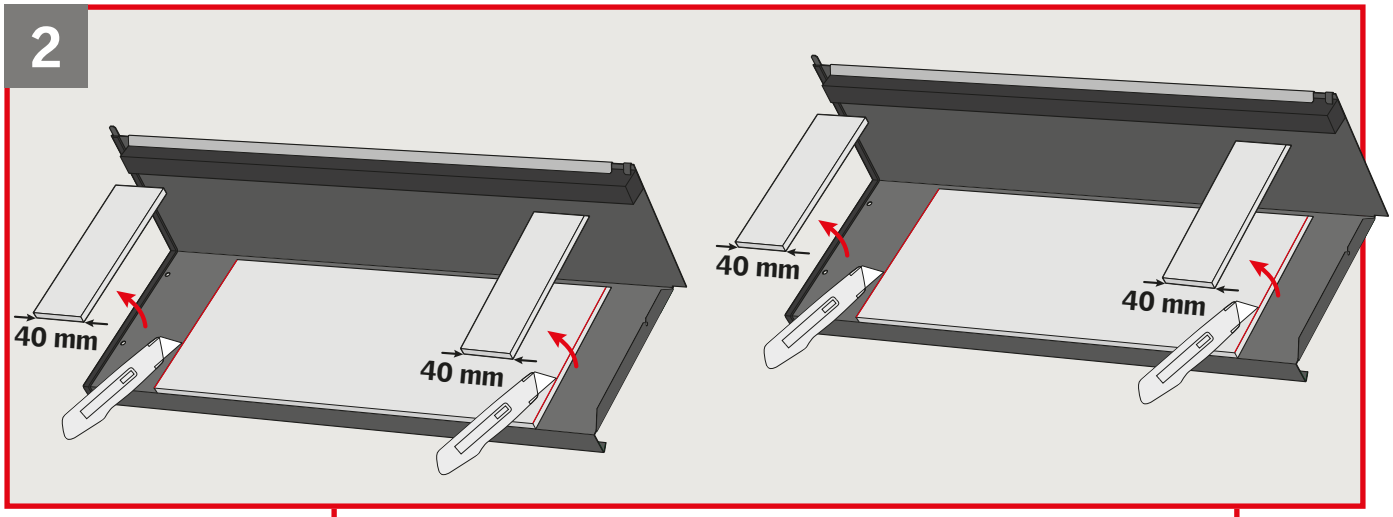

3

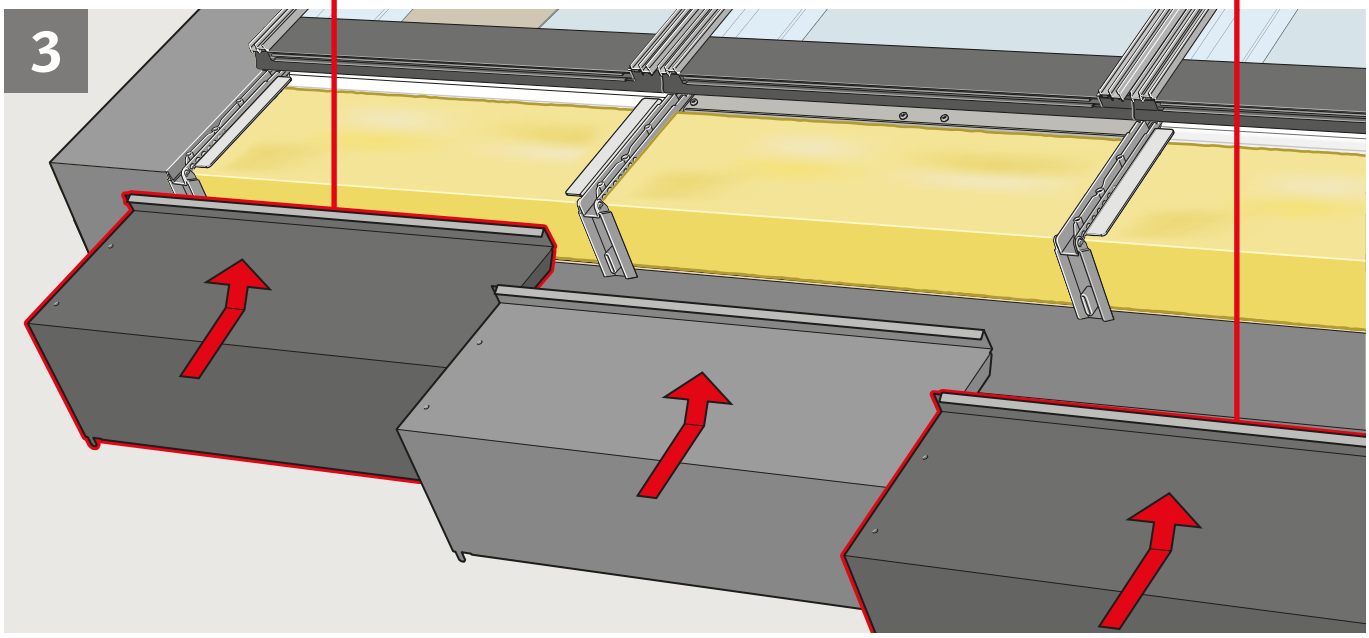





19 → 27



34 → 40



22 → 28



31 → 37

4

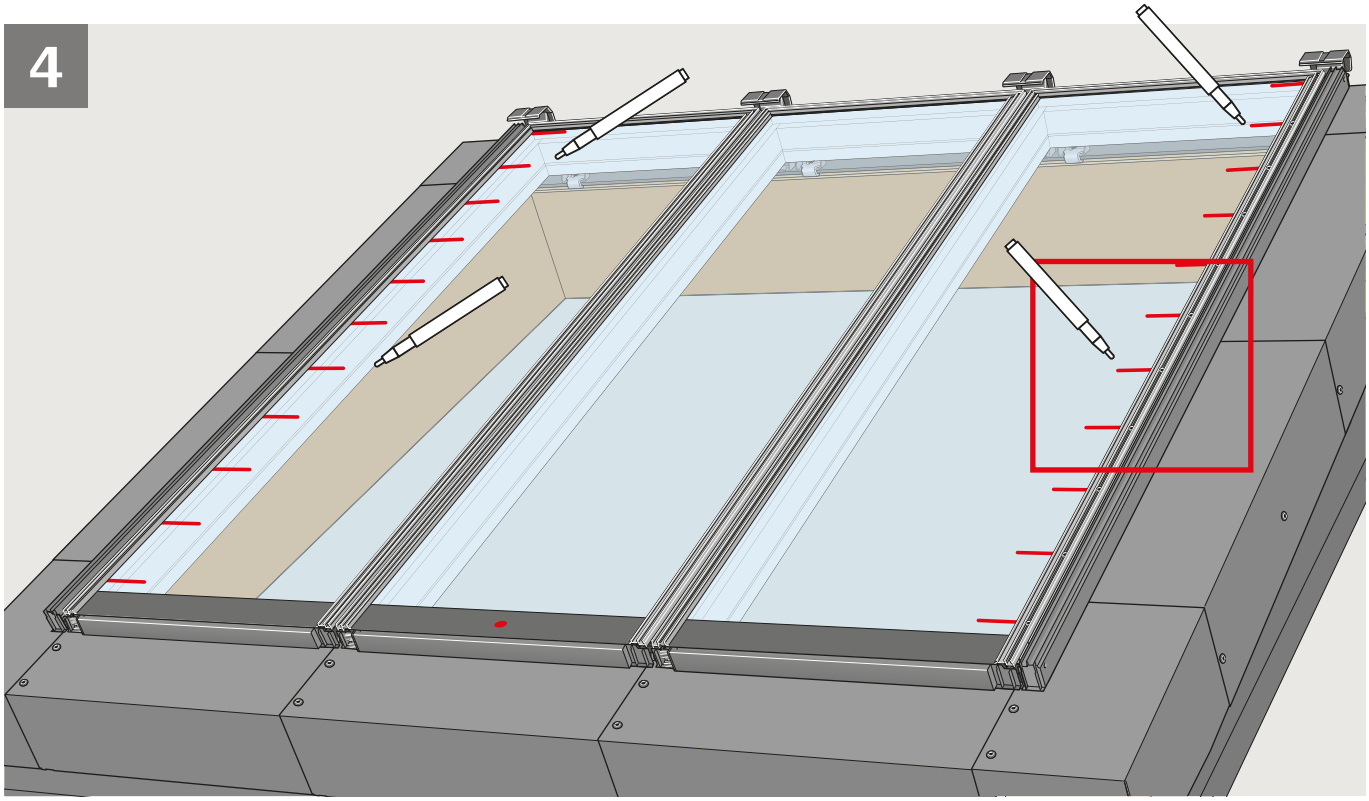

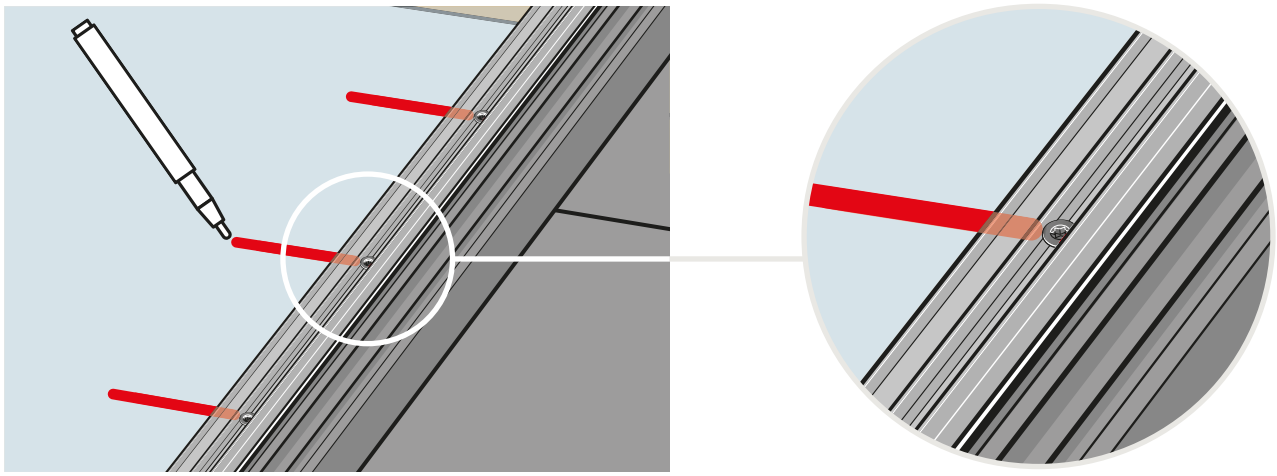





28 → 32

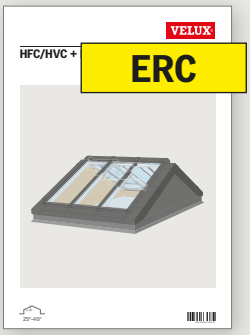

41 → 50



29 → 39



38 → 47

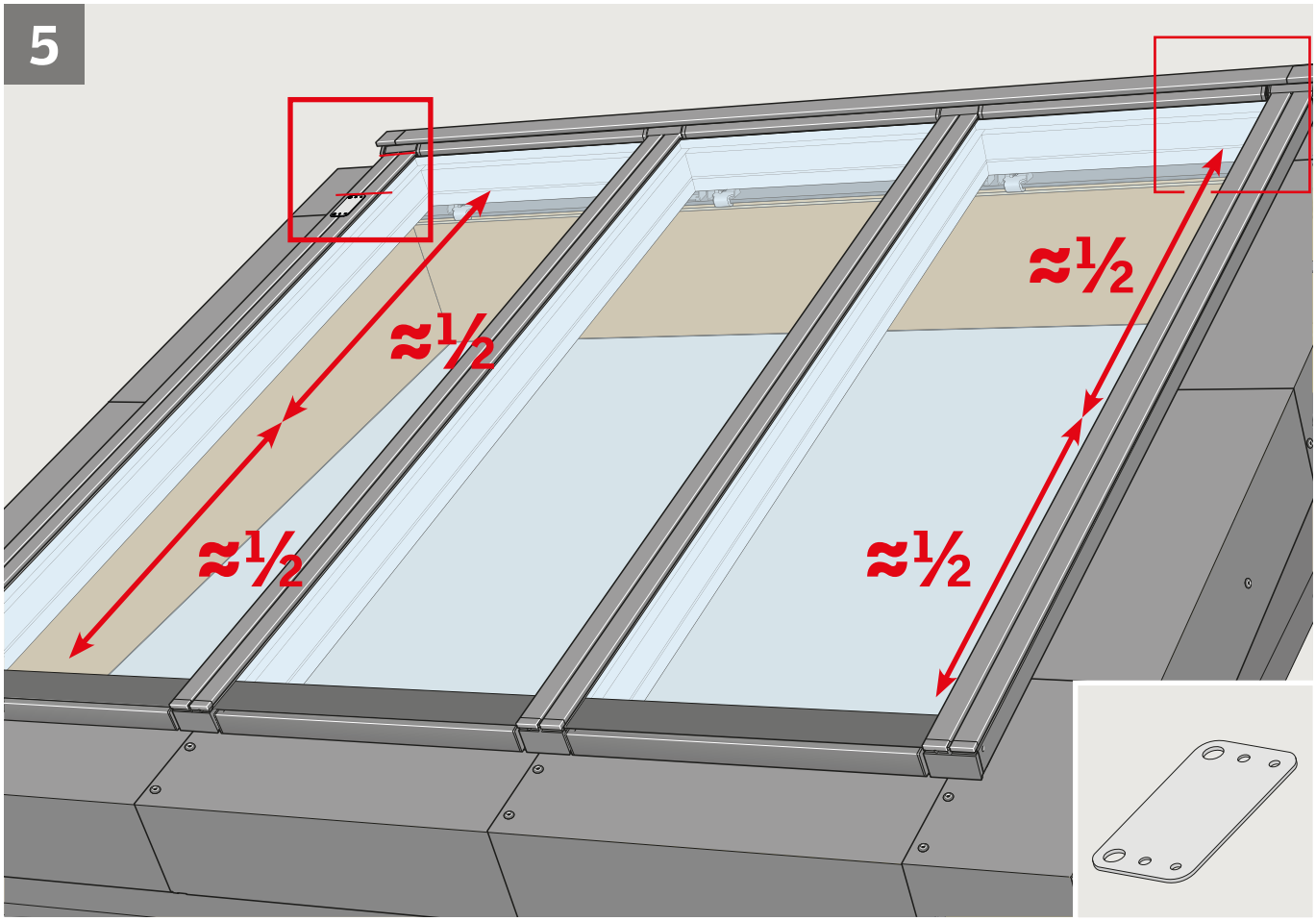
5
≈½
≈½
≈½
≈½

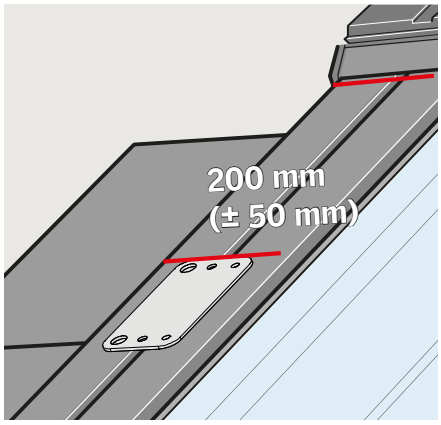
200 mm
(± 50 mm)

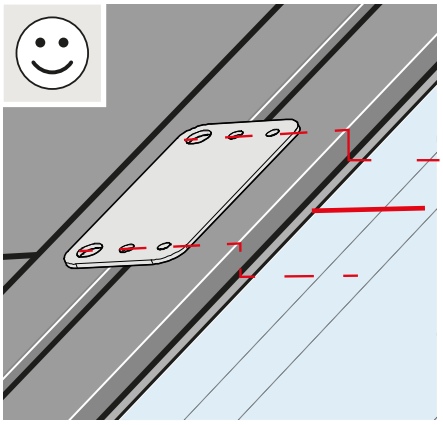

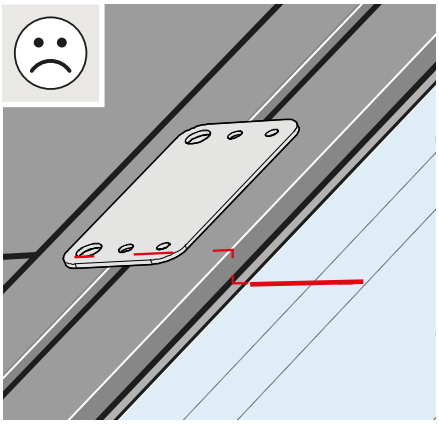

6

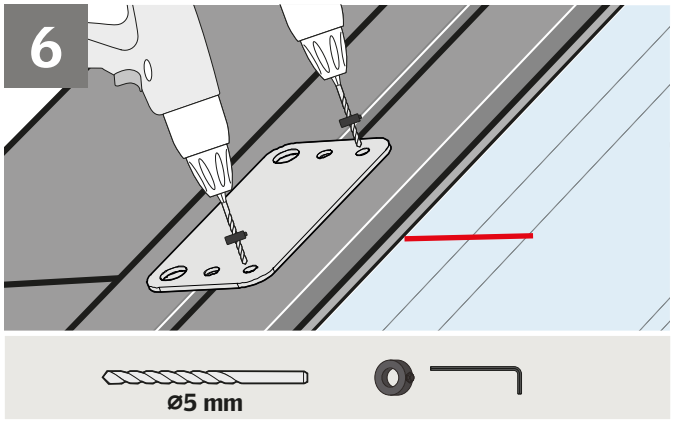

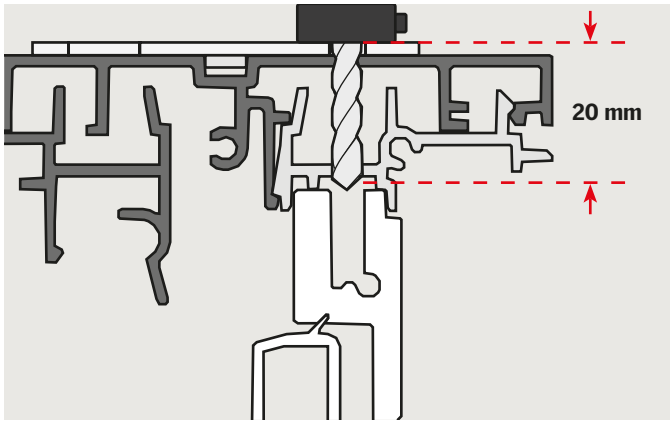

7

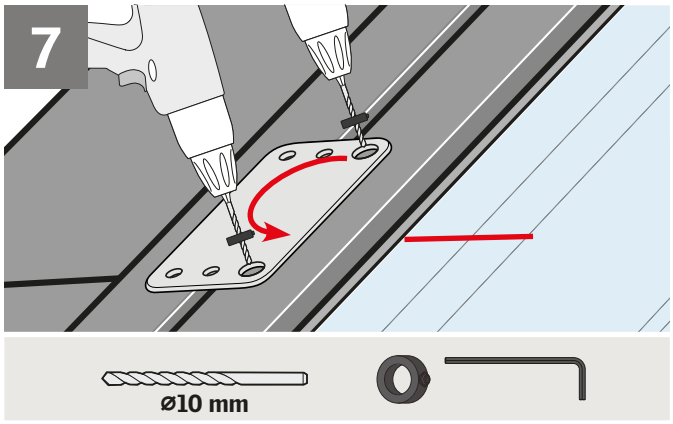

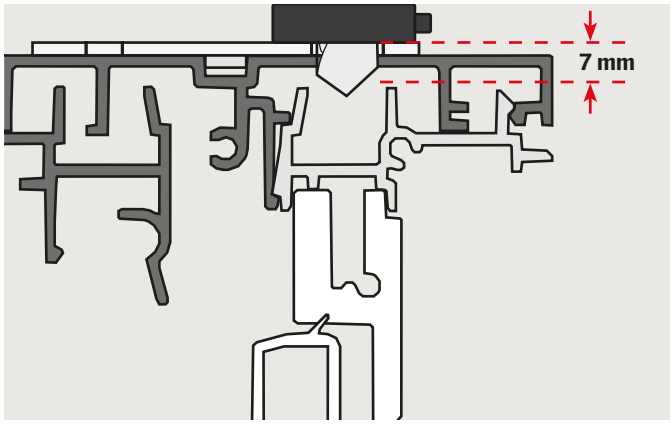

8

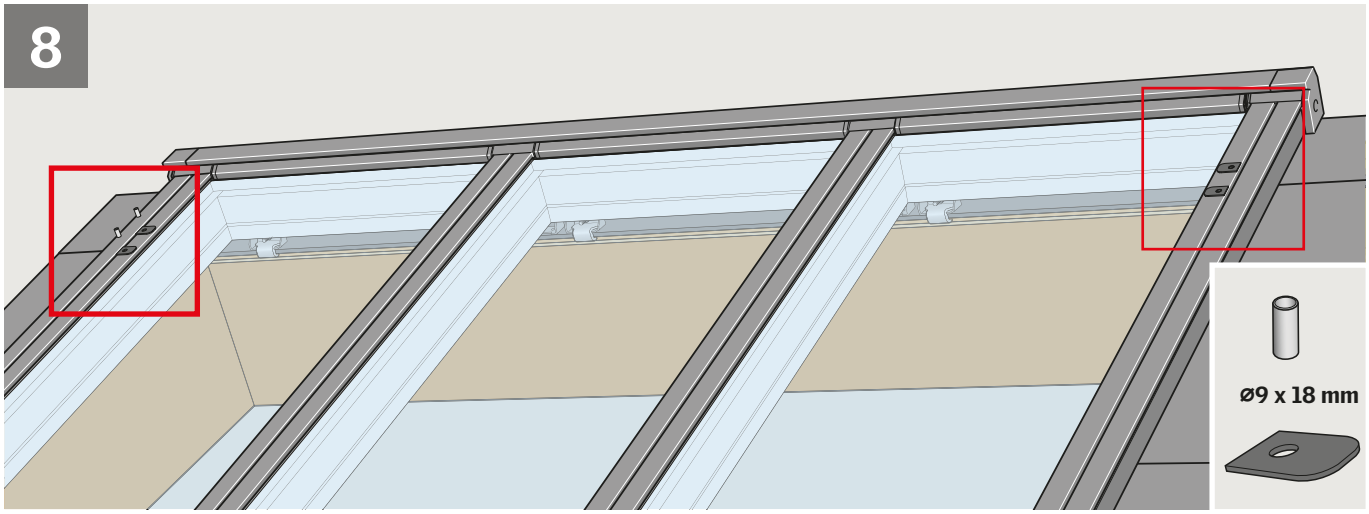

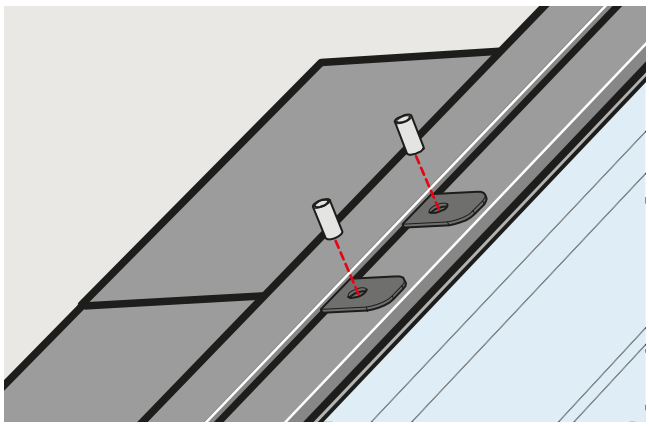

9

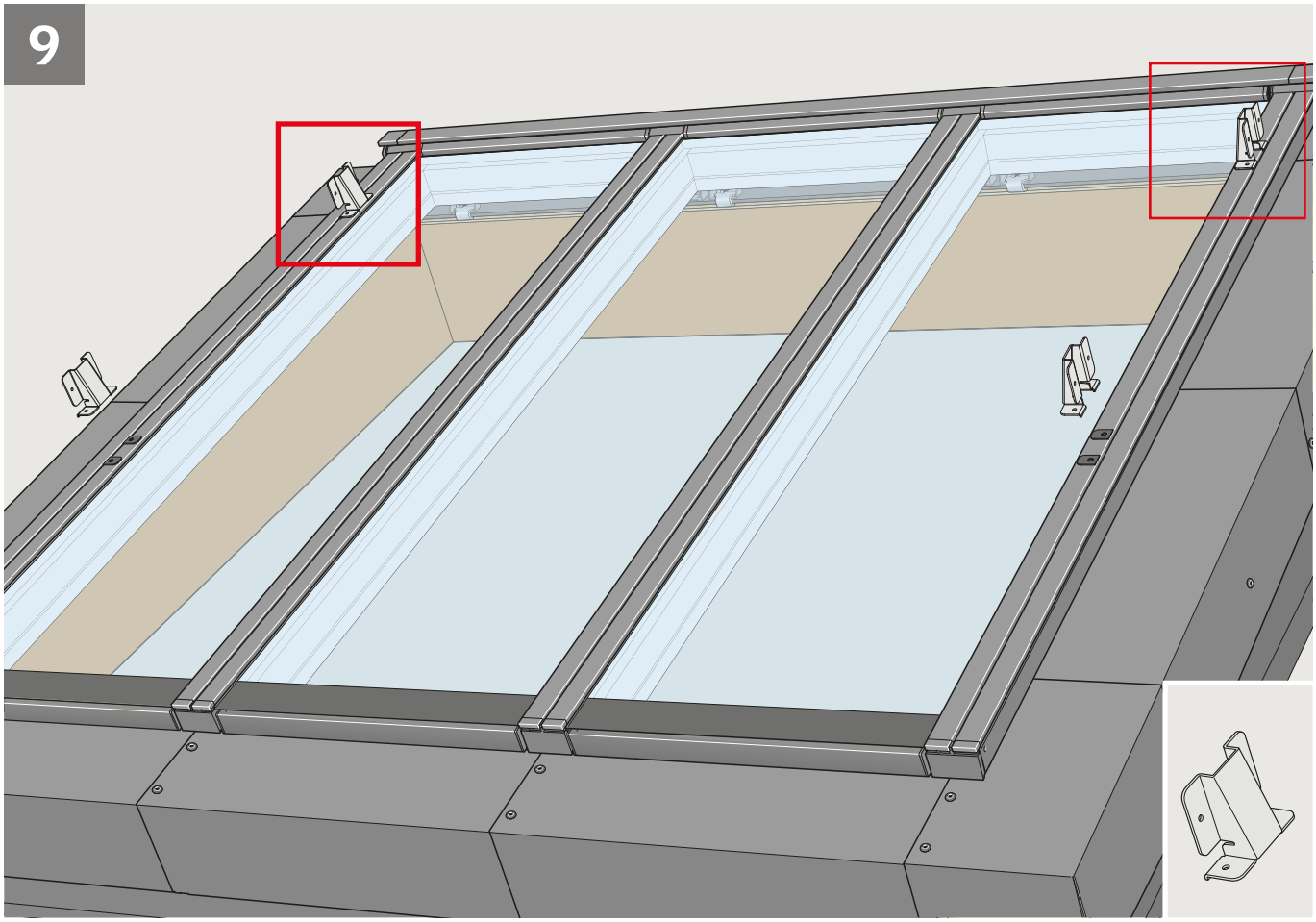

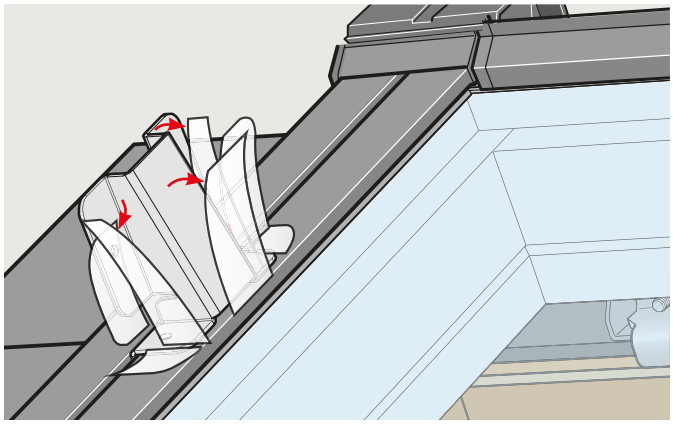

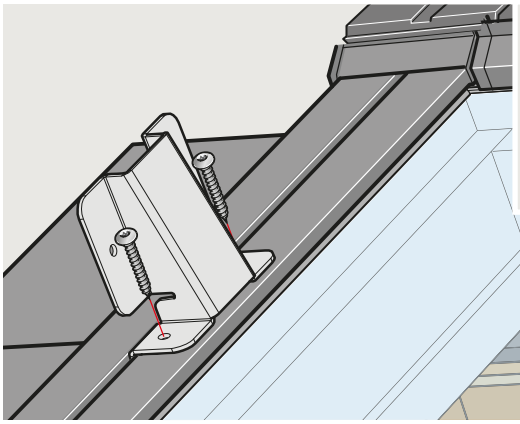



10

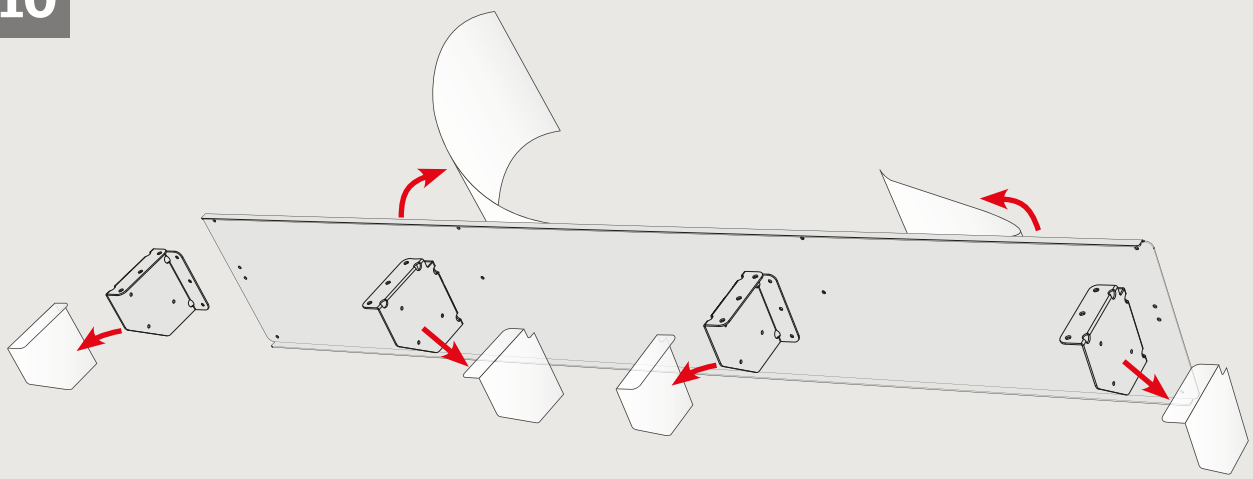

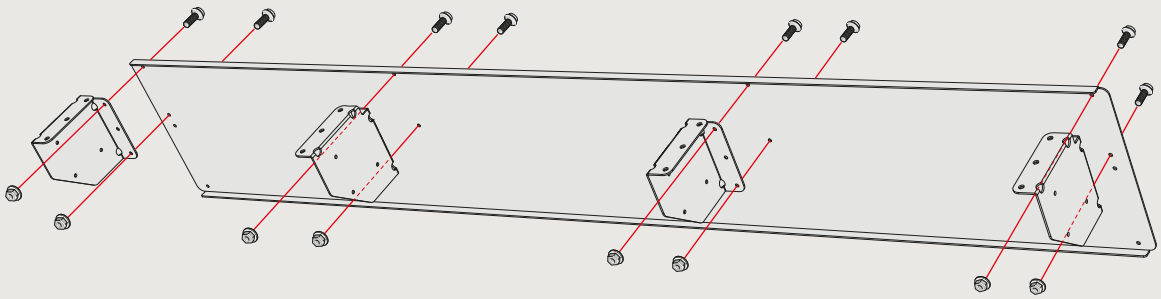



M6 x 16 mm



M6

11

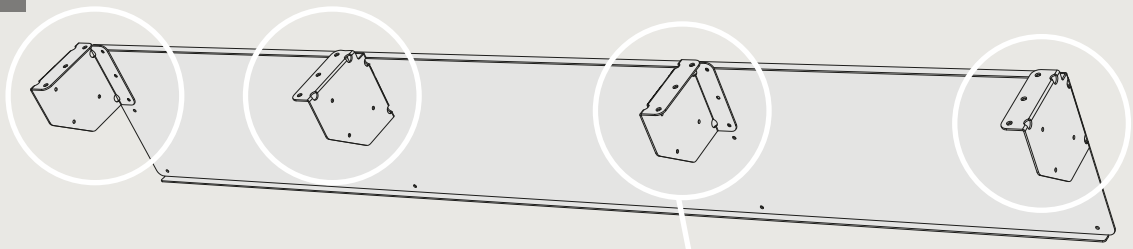

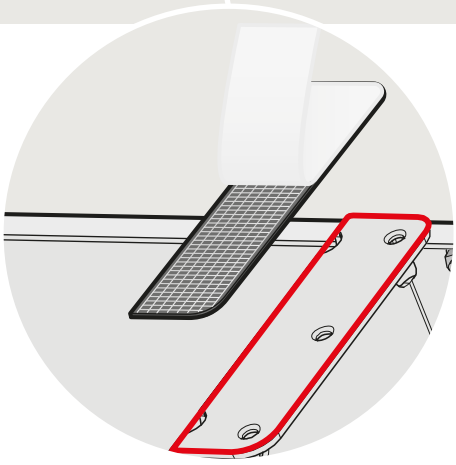

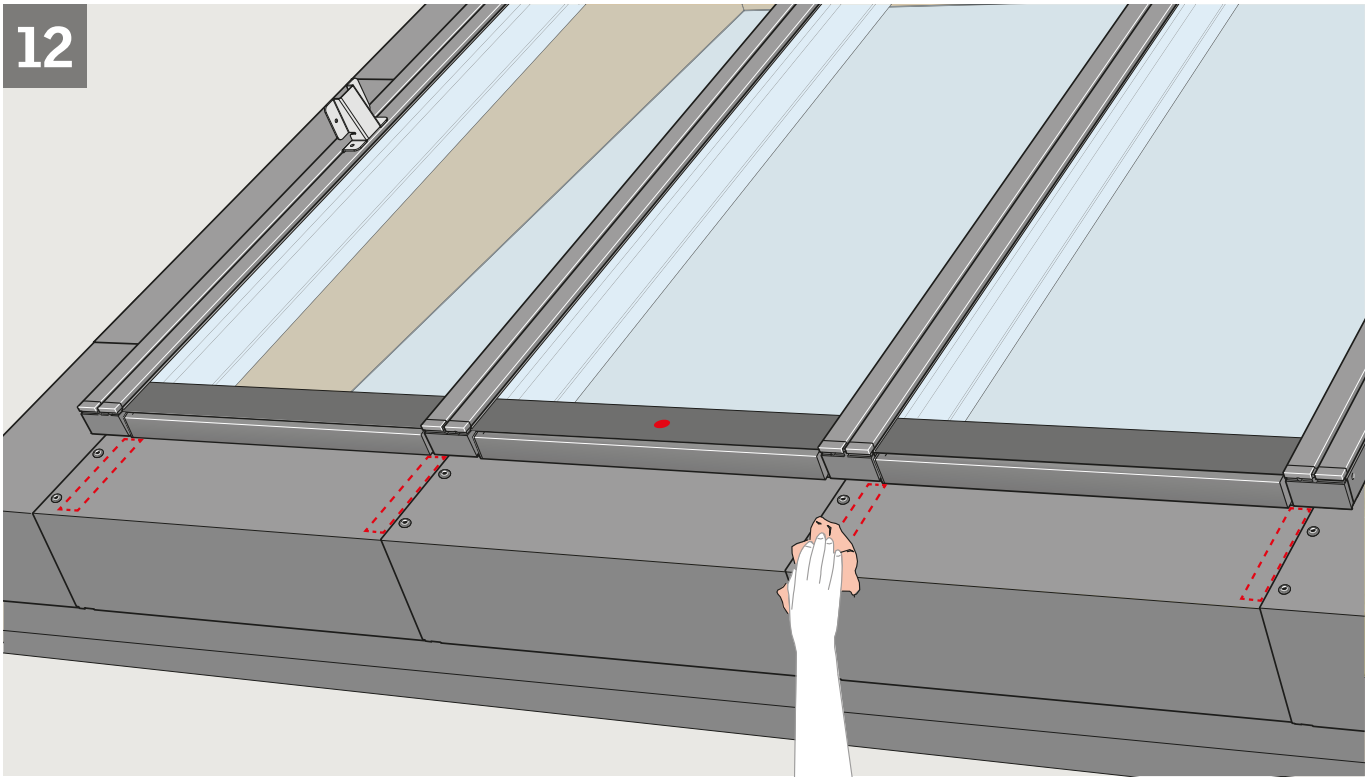
12

13

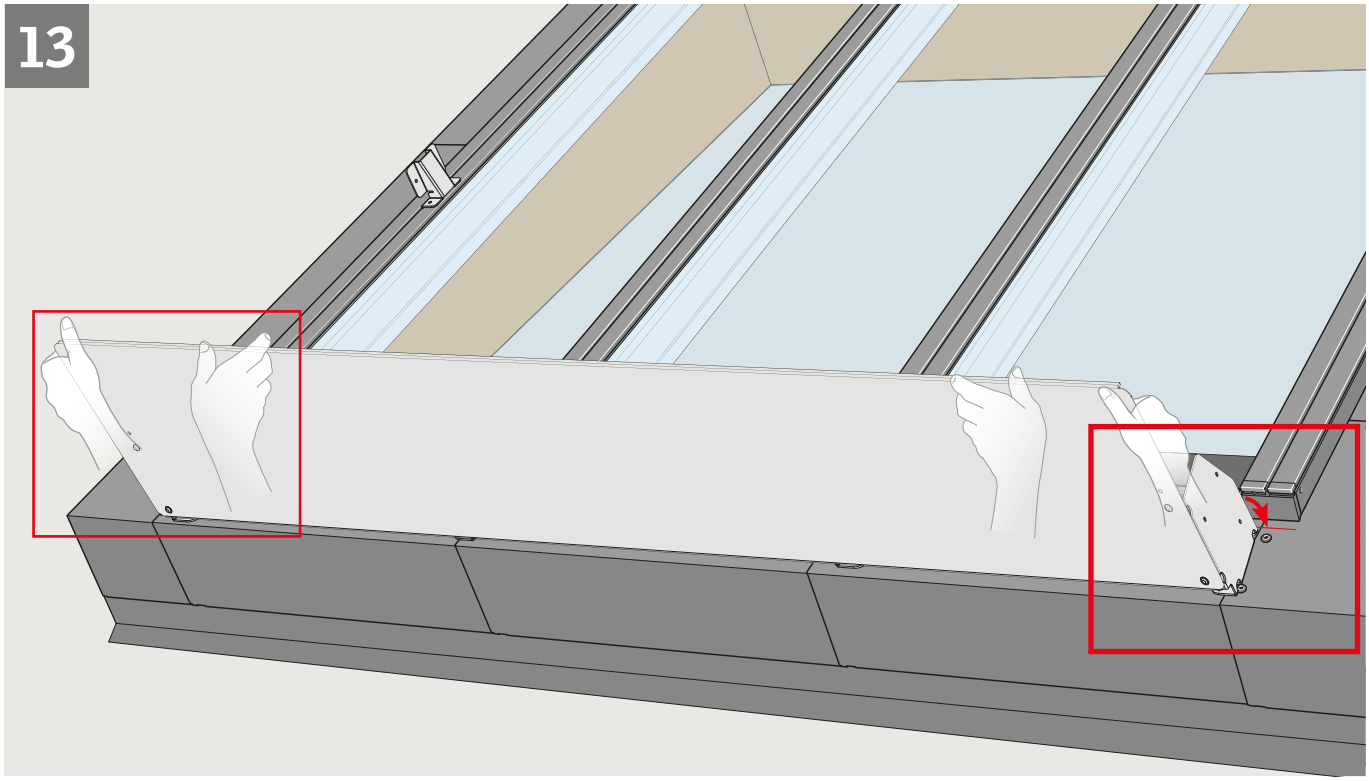

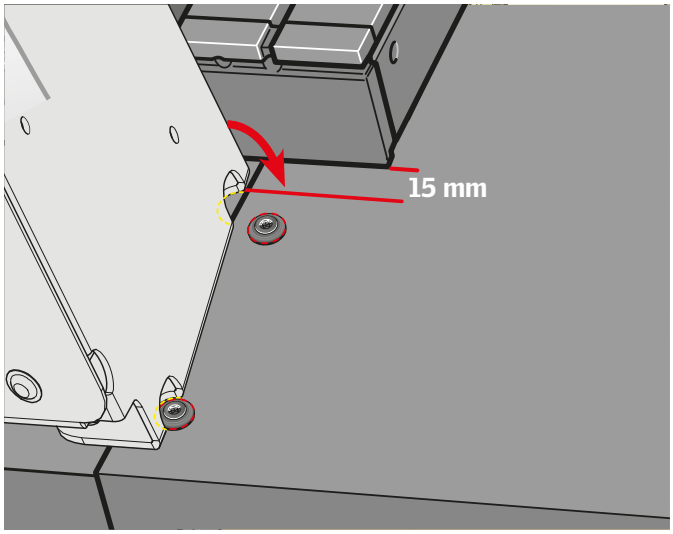

14

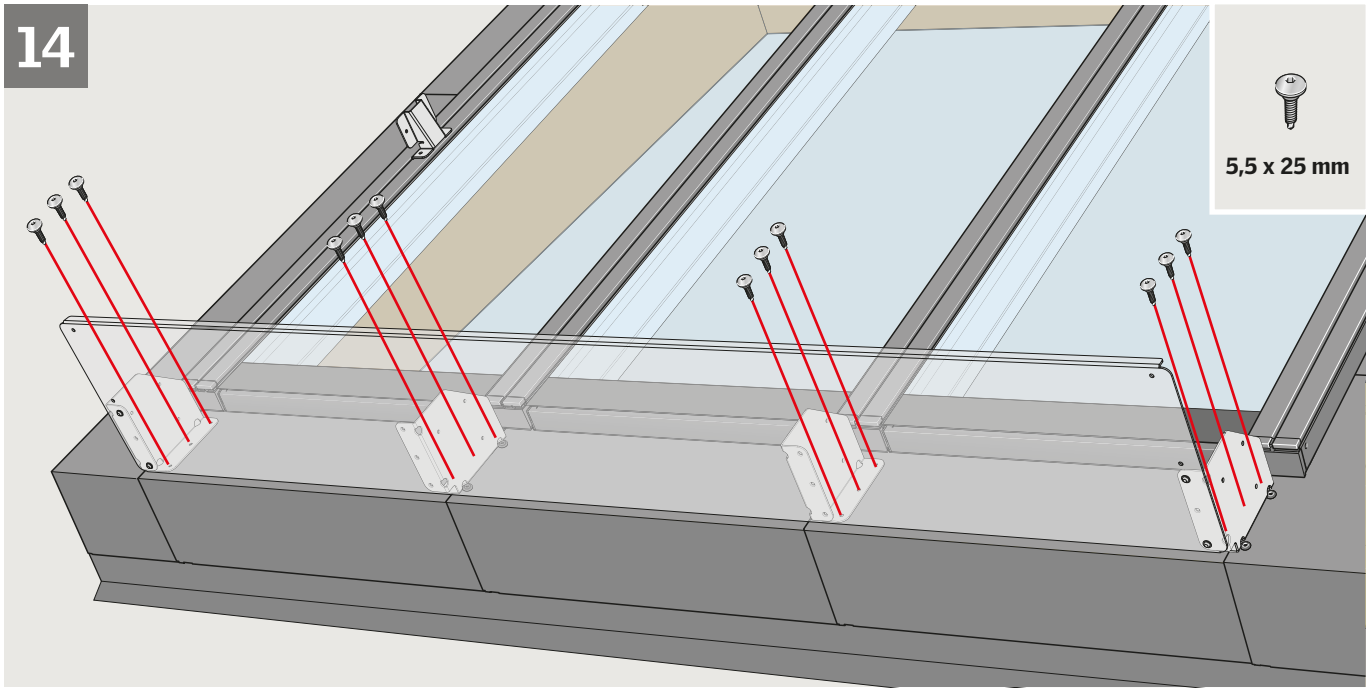

15

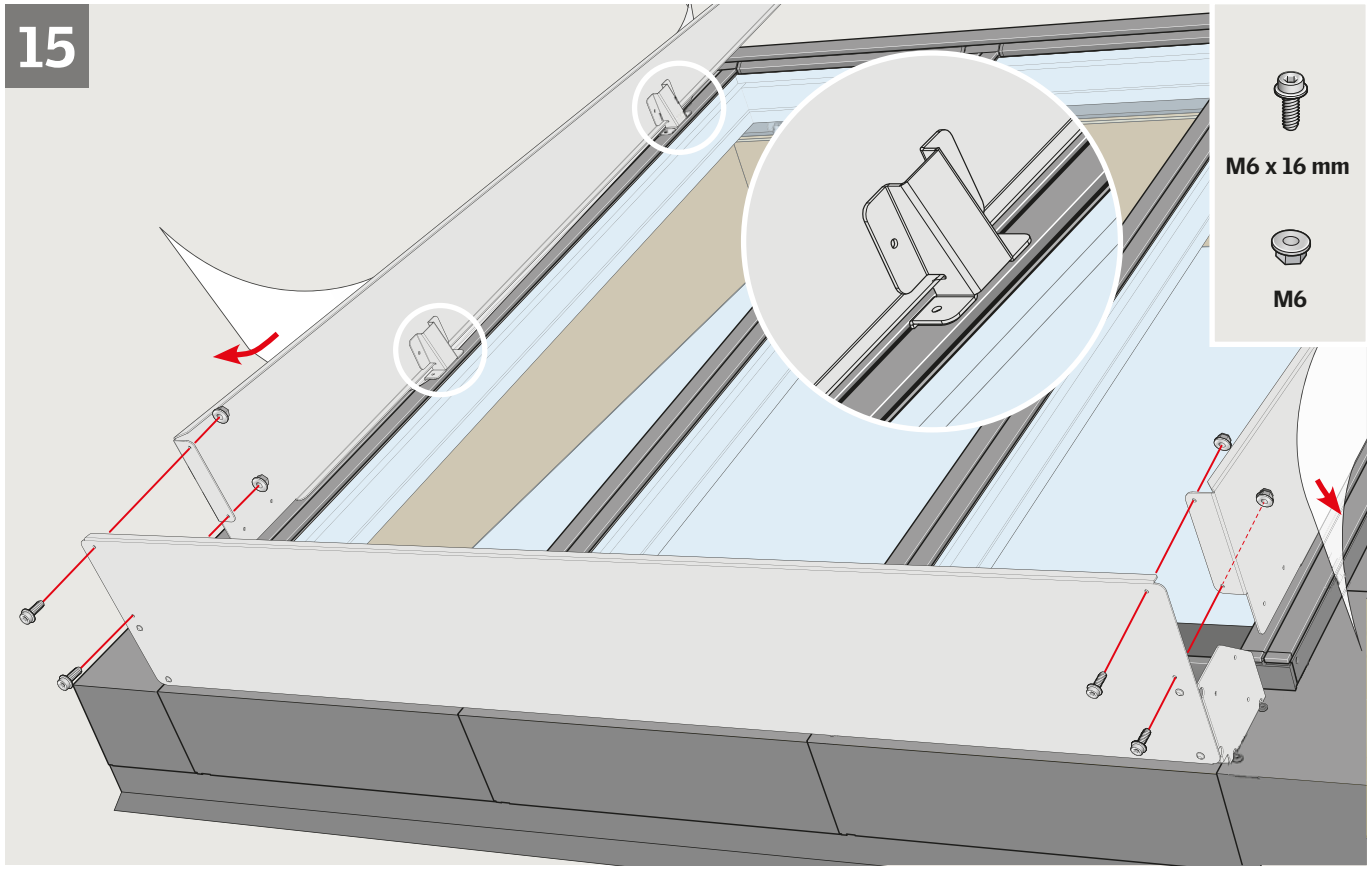

16

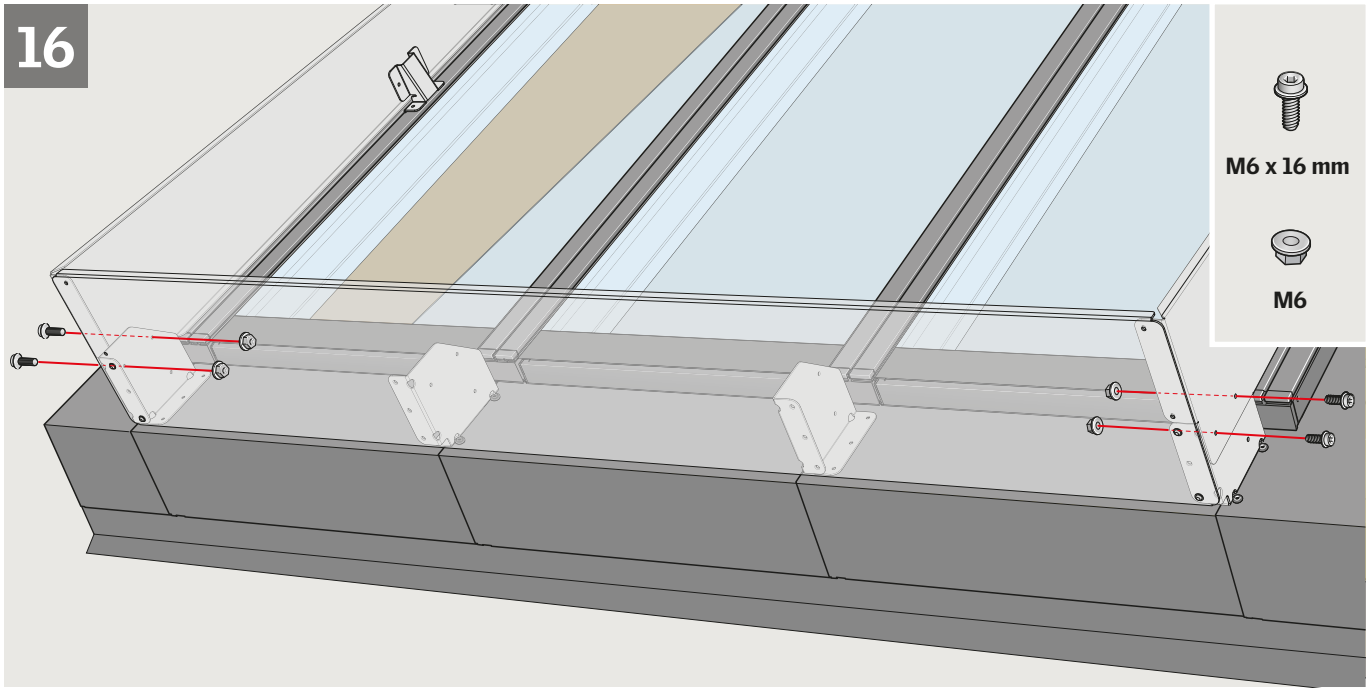

M6 x 16 mm

M6

17

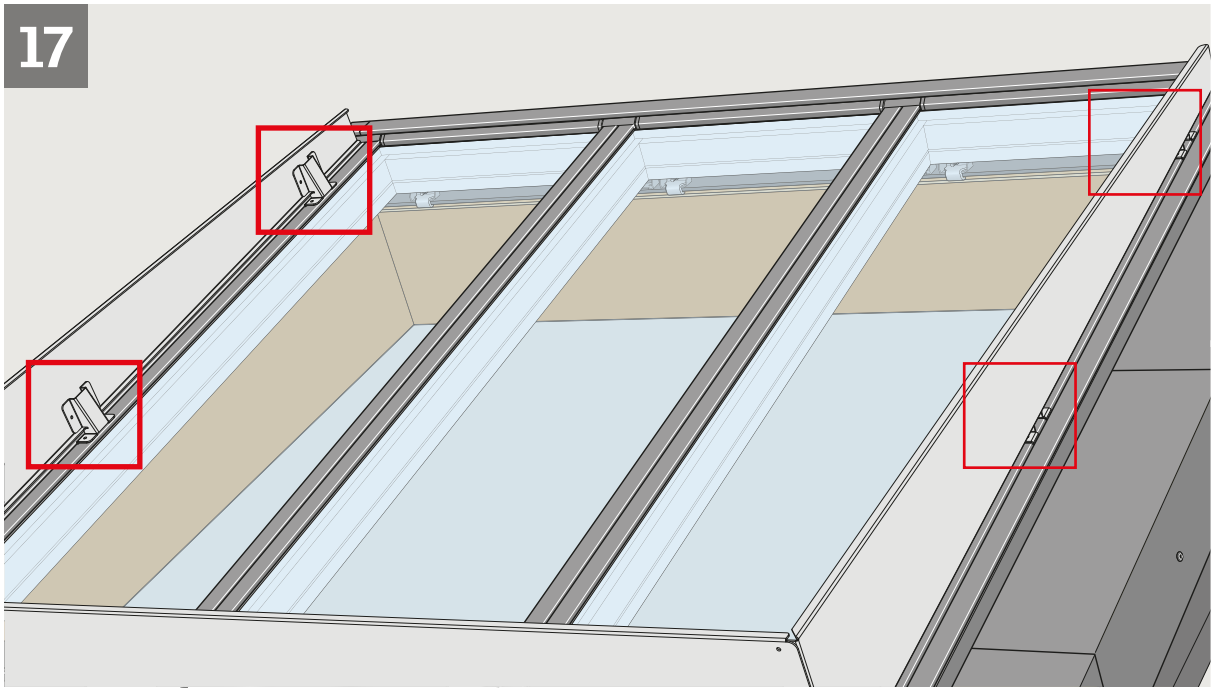



ø = 7 mm



M6 x 16 mm



M6

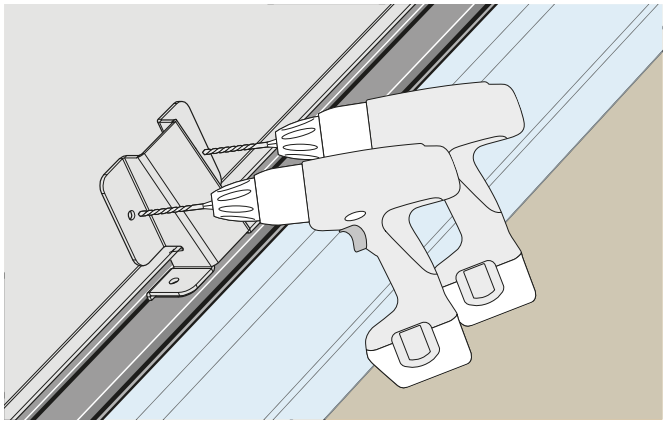

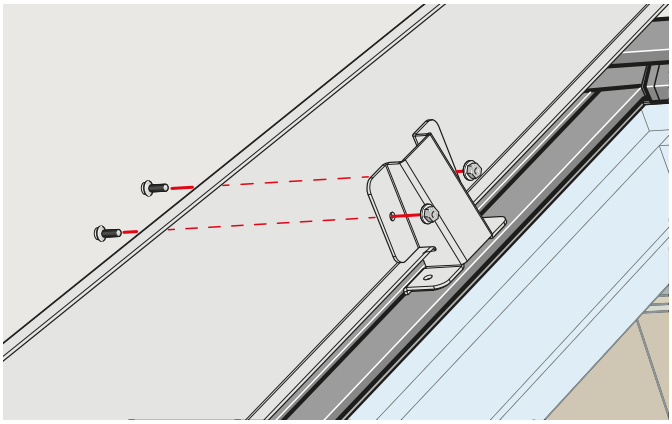

18

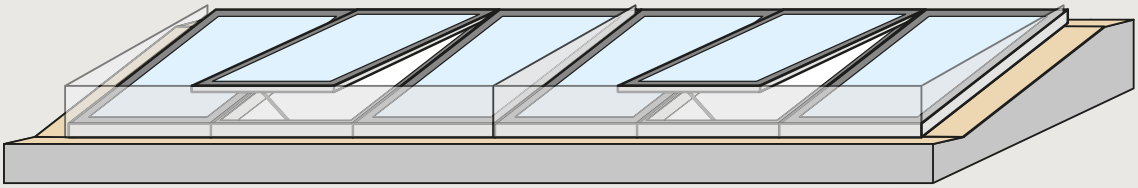

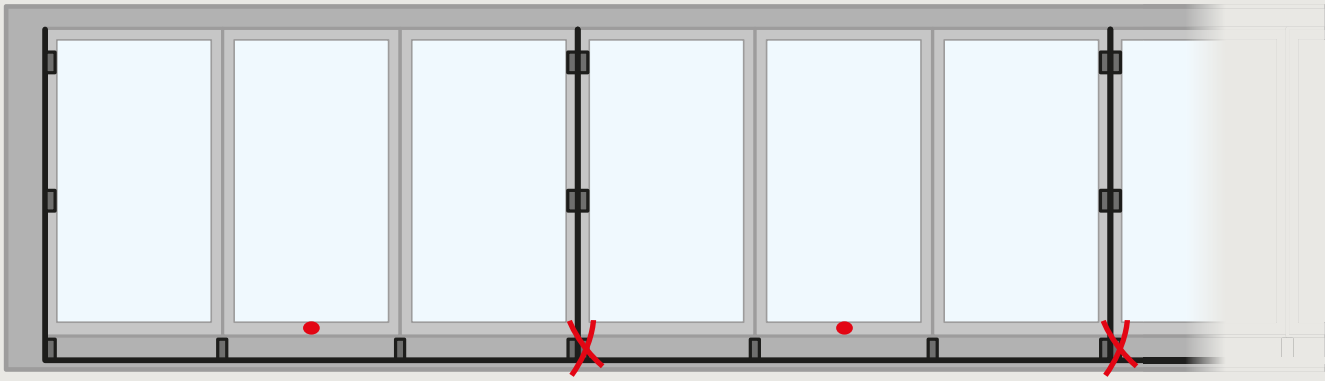

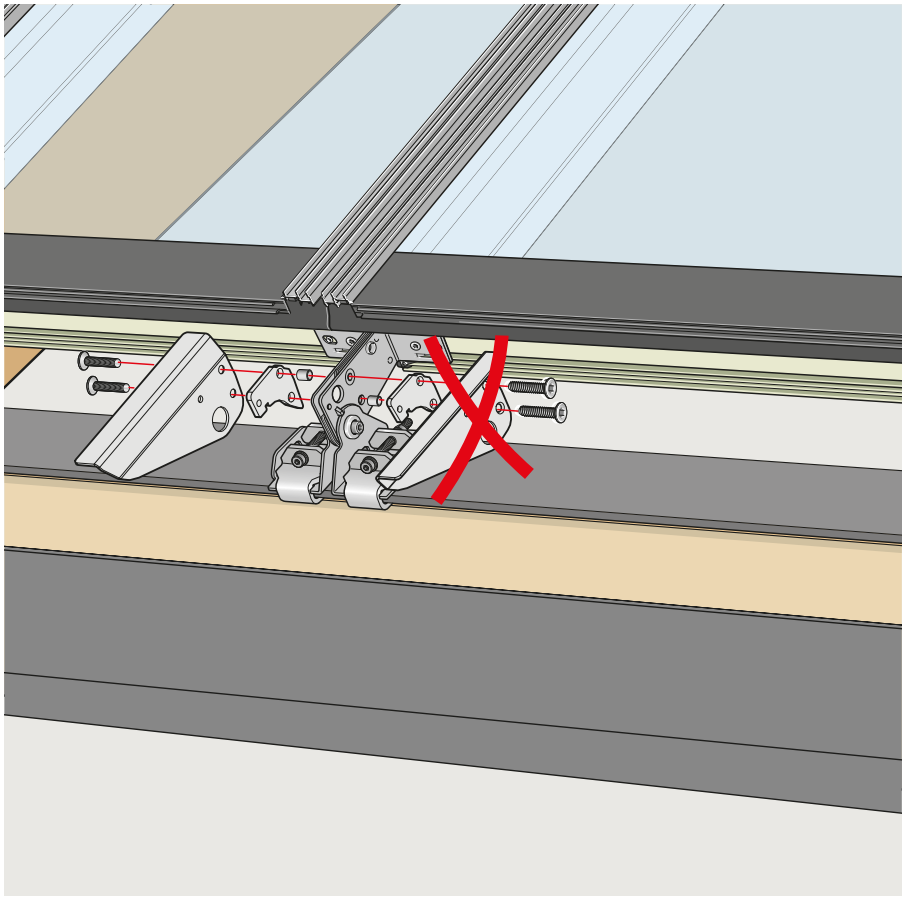

→ 14

19

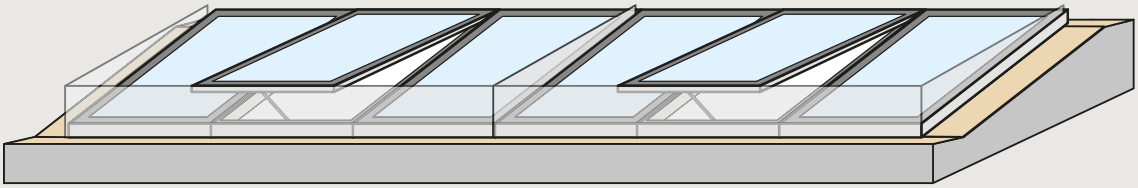

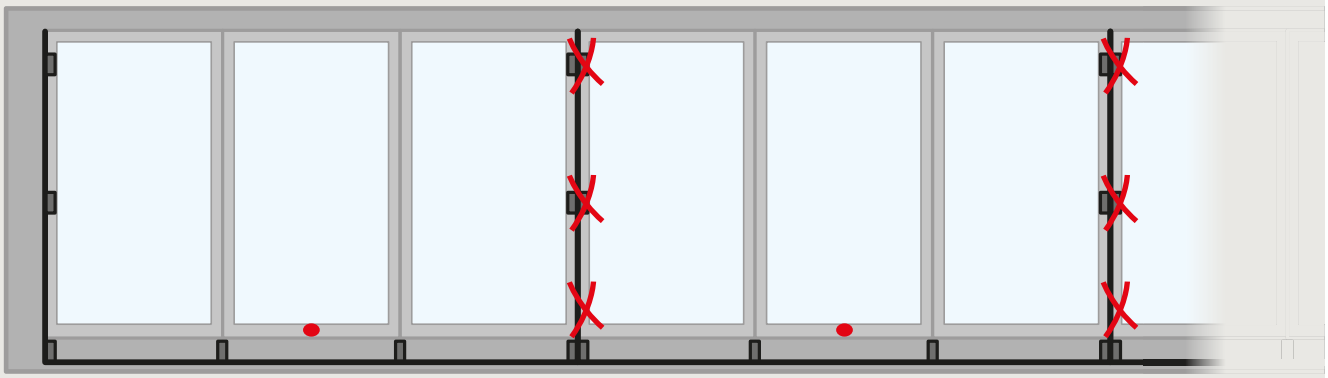

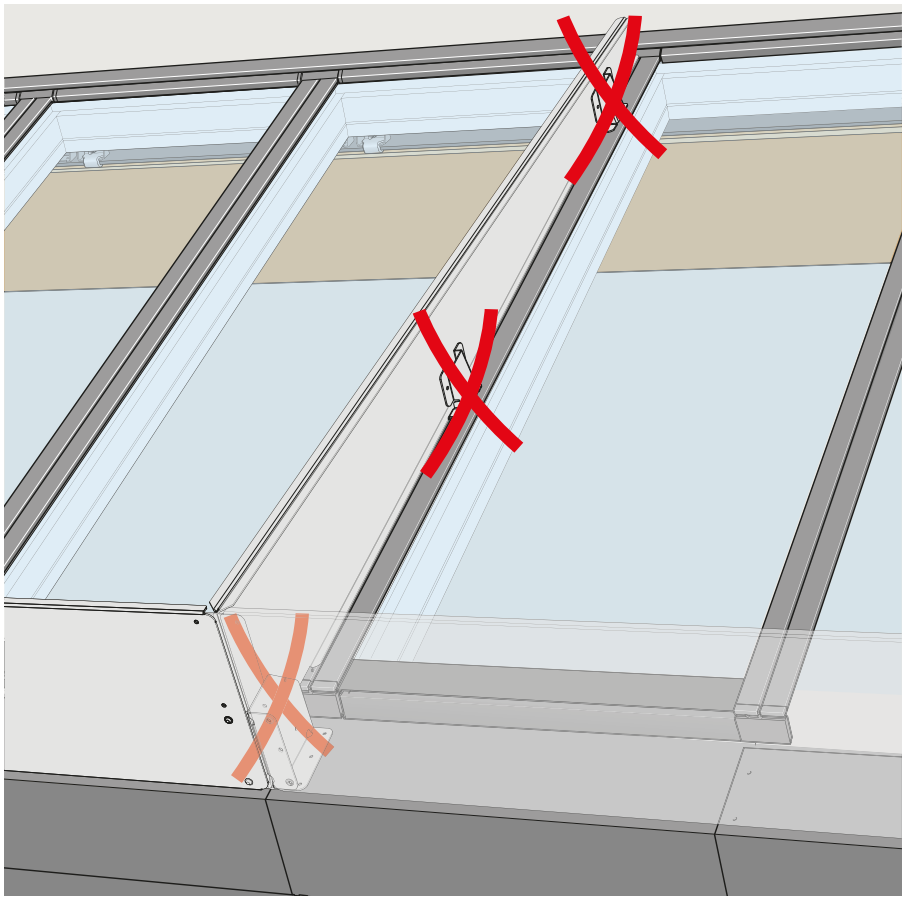

17

F1-

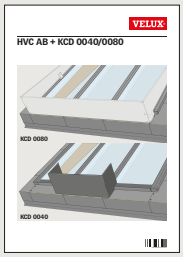

KCD

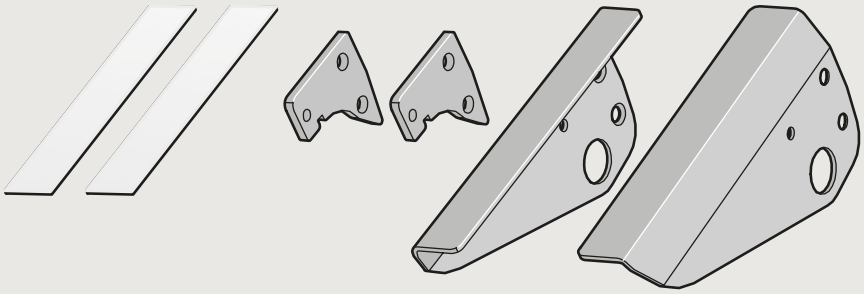



M8 x 40 mm



M8



ø8 x 12 mm



M6 x 16 mm



M6



5,5 x 25 mm

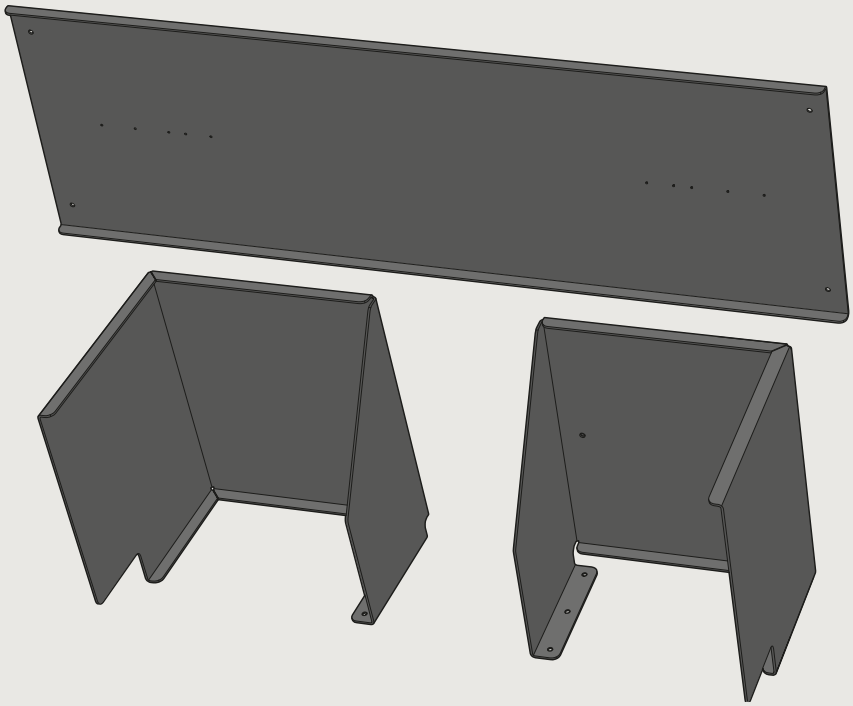

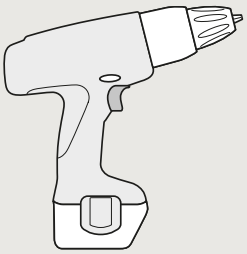

TX 20

TX 30



HEX 5



HEX 6

7 mm



10 mm

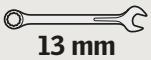

13 mm







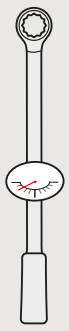

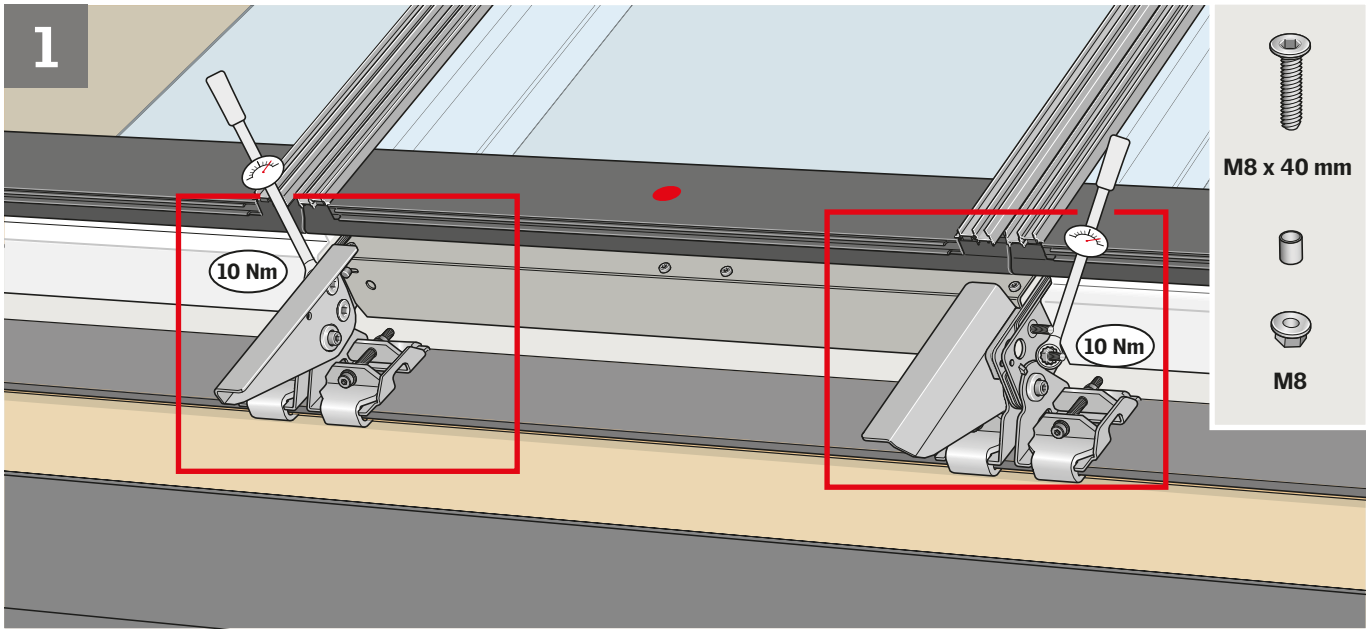

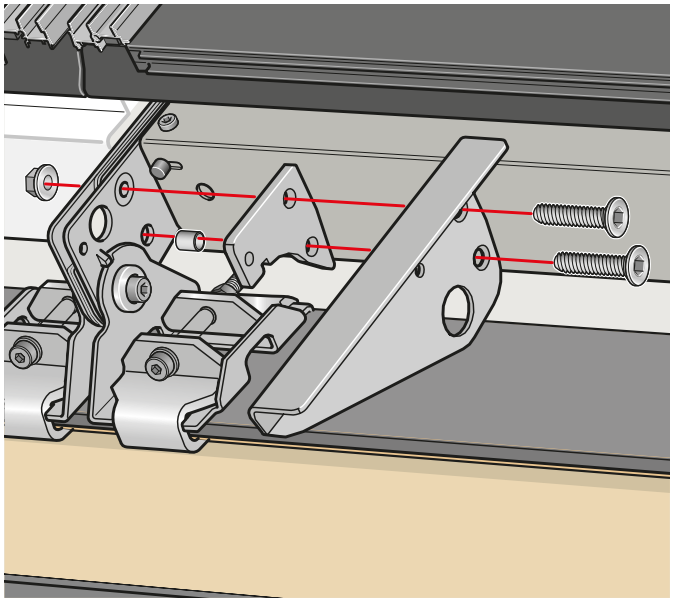

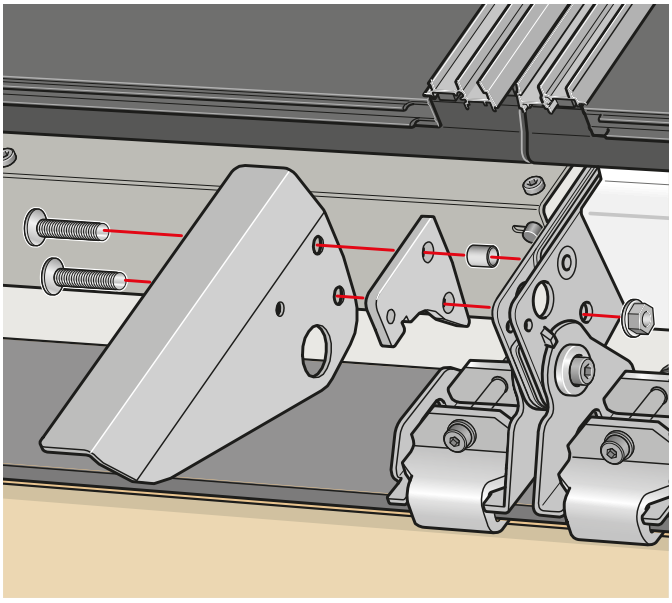



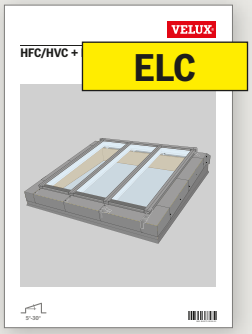

13 → 18

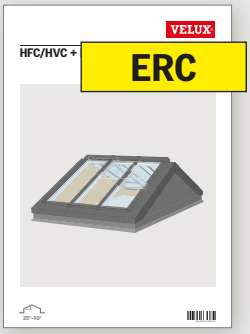

27 → 33



15 → 21



23 → 30

2

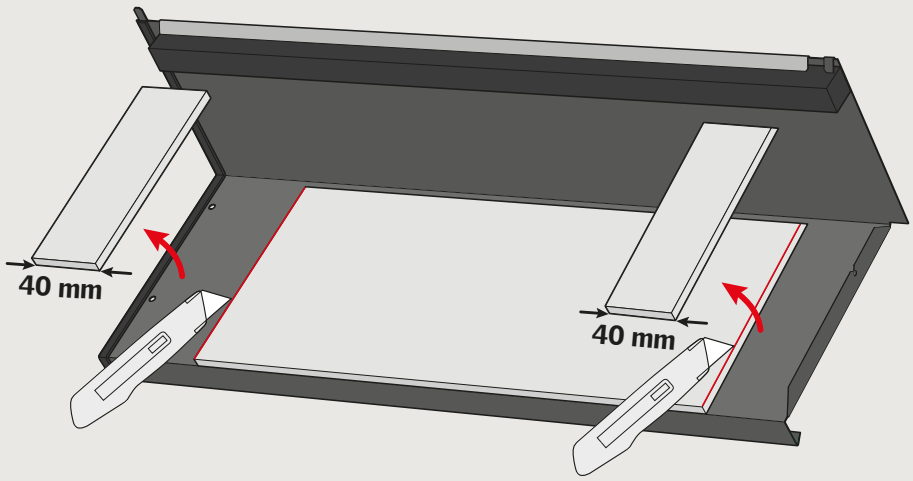

3

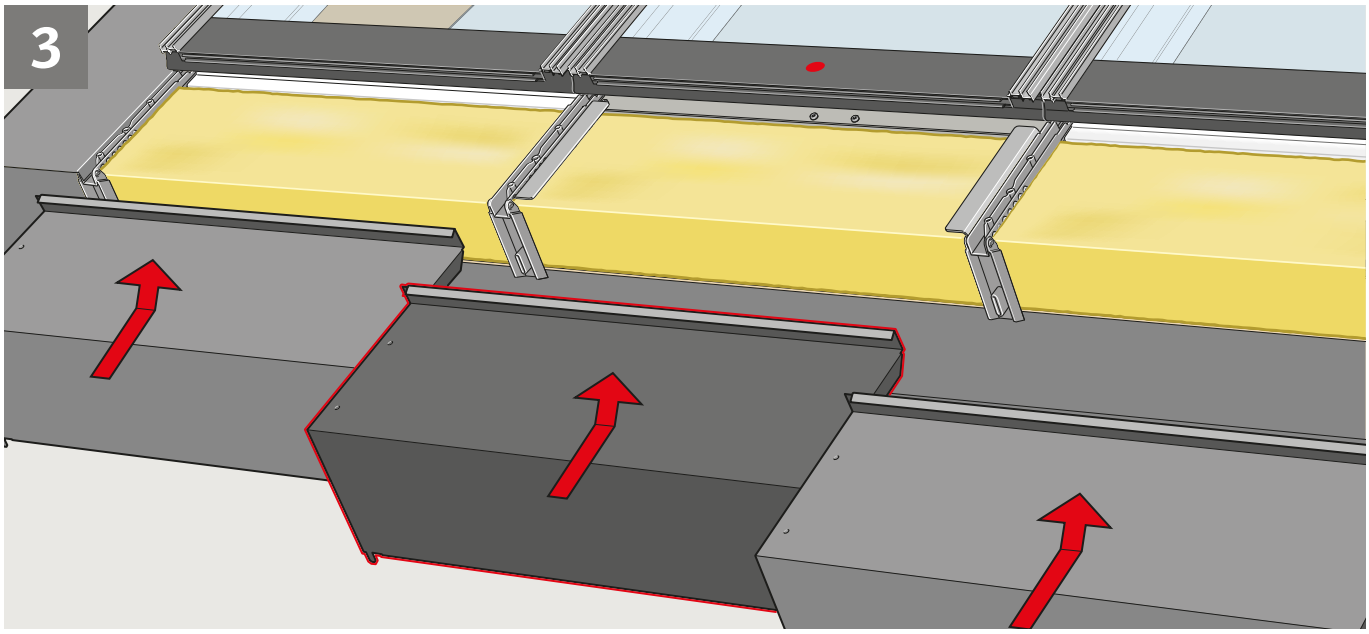





19 → 32

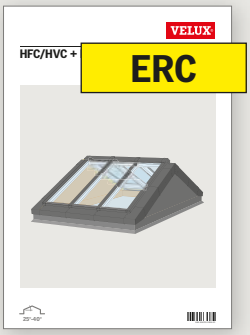

34 → 50



22 → 39



31 → 47

4

X mm	⟷
675 mm	A
750 mm	B
800 mm	C
900 mm	D
1000 mm	E

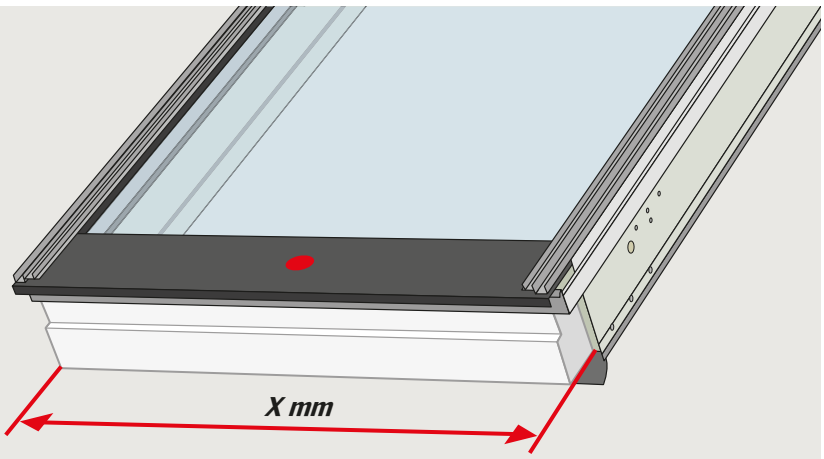

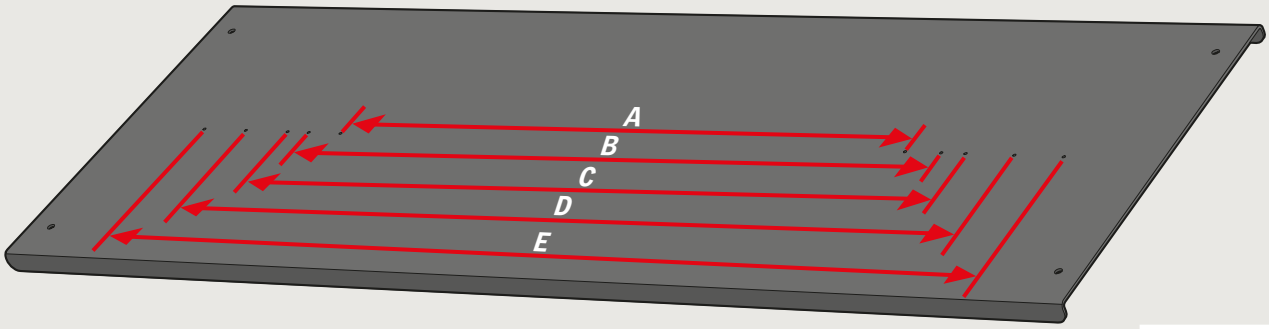

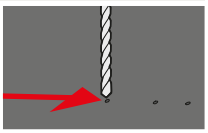

ø = 7 mm

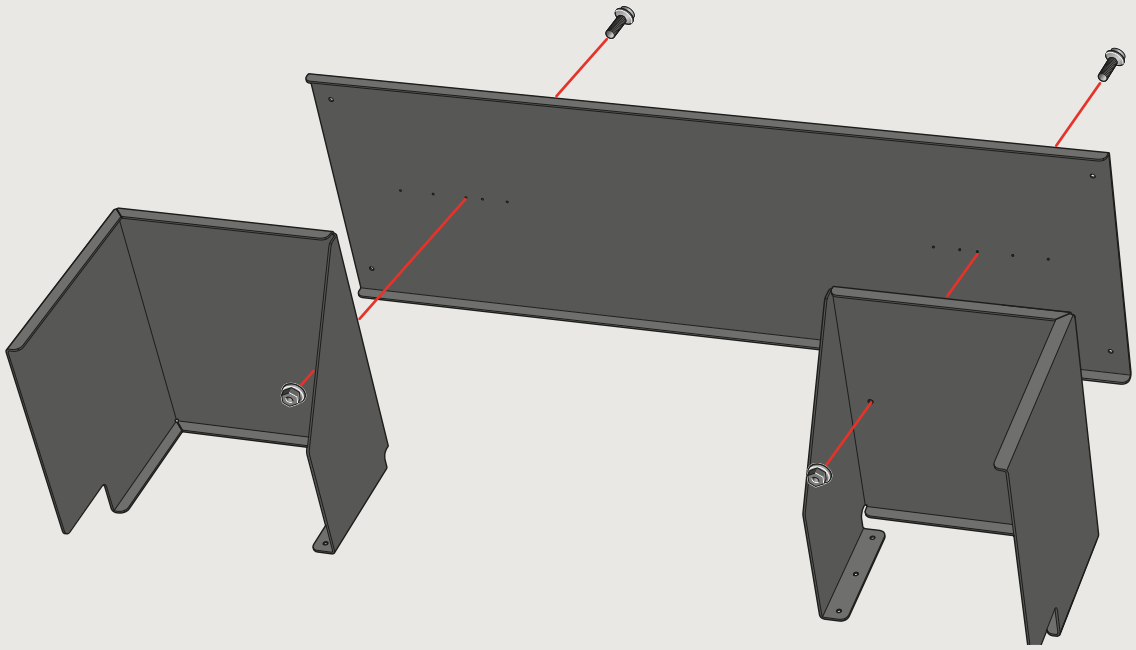



M6 x 16 mm



M6

5

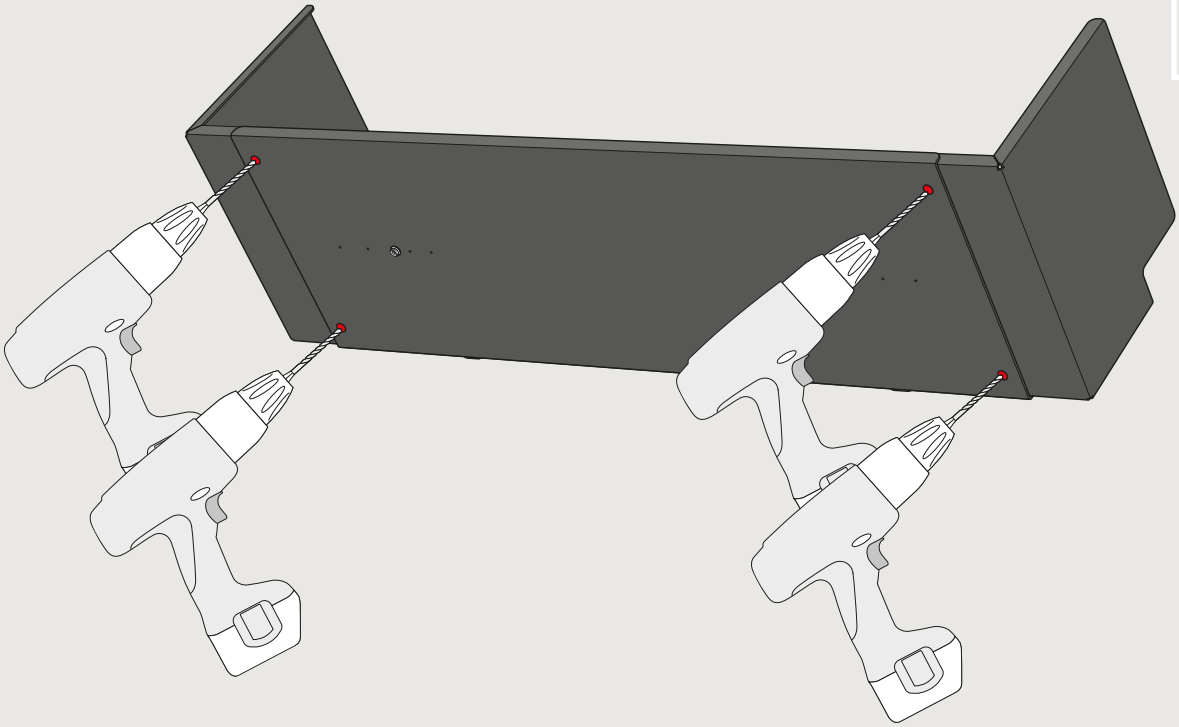



ø = 7 mm

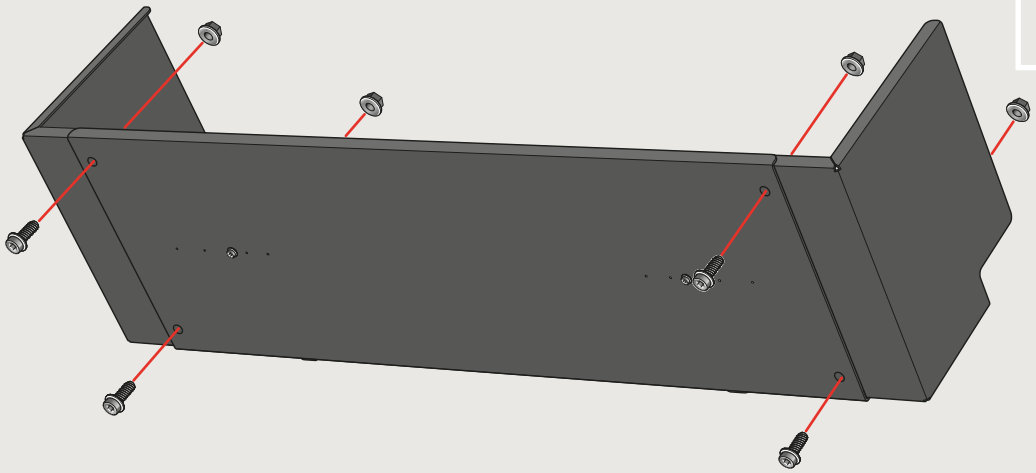



M6 x 16 mm



M6

6

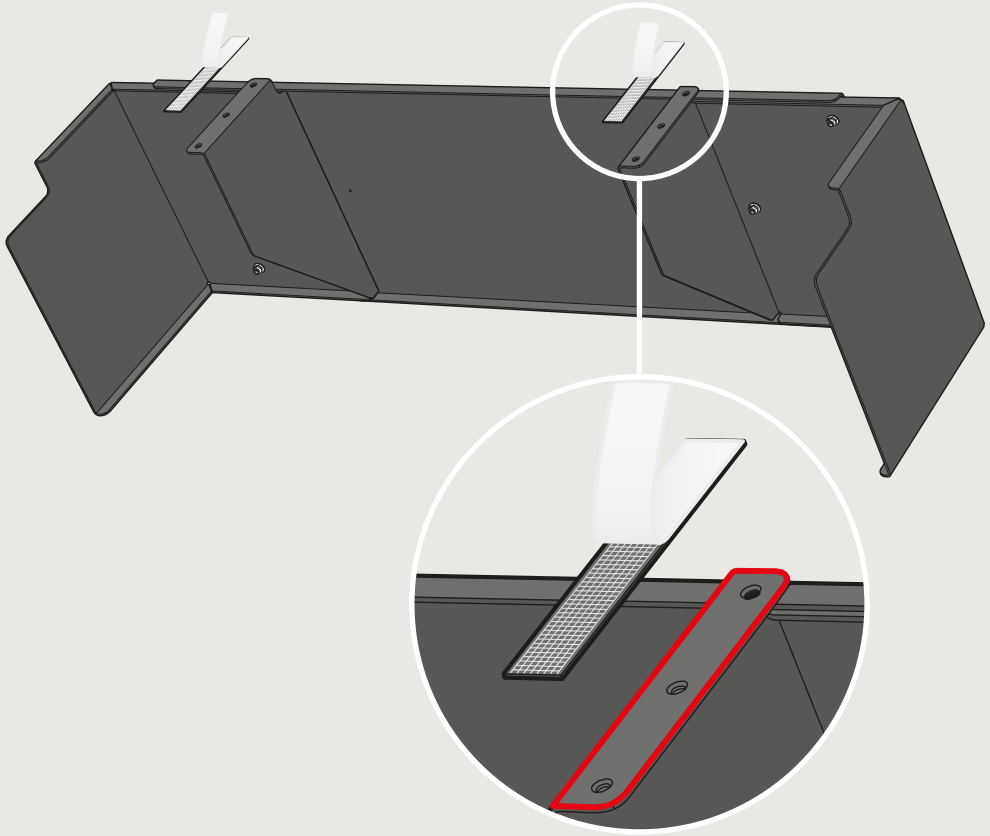

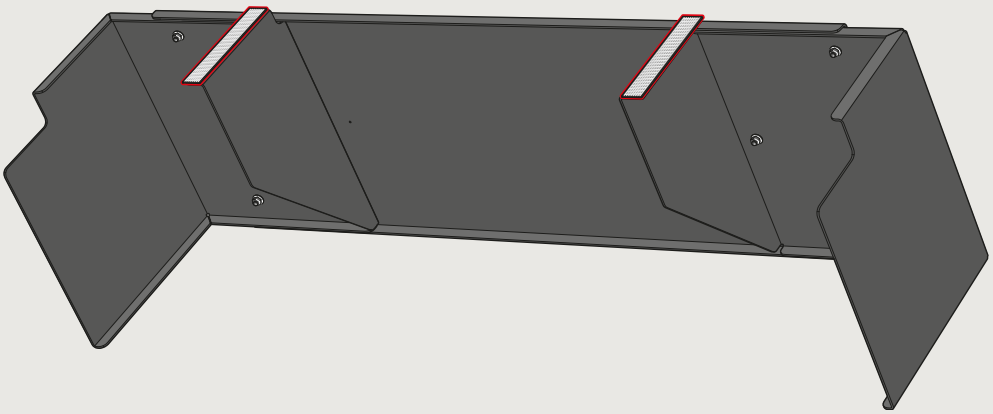

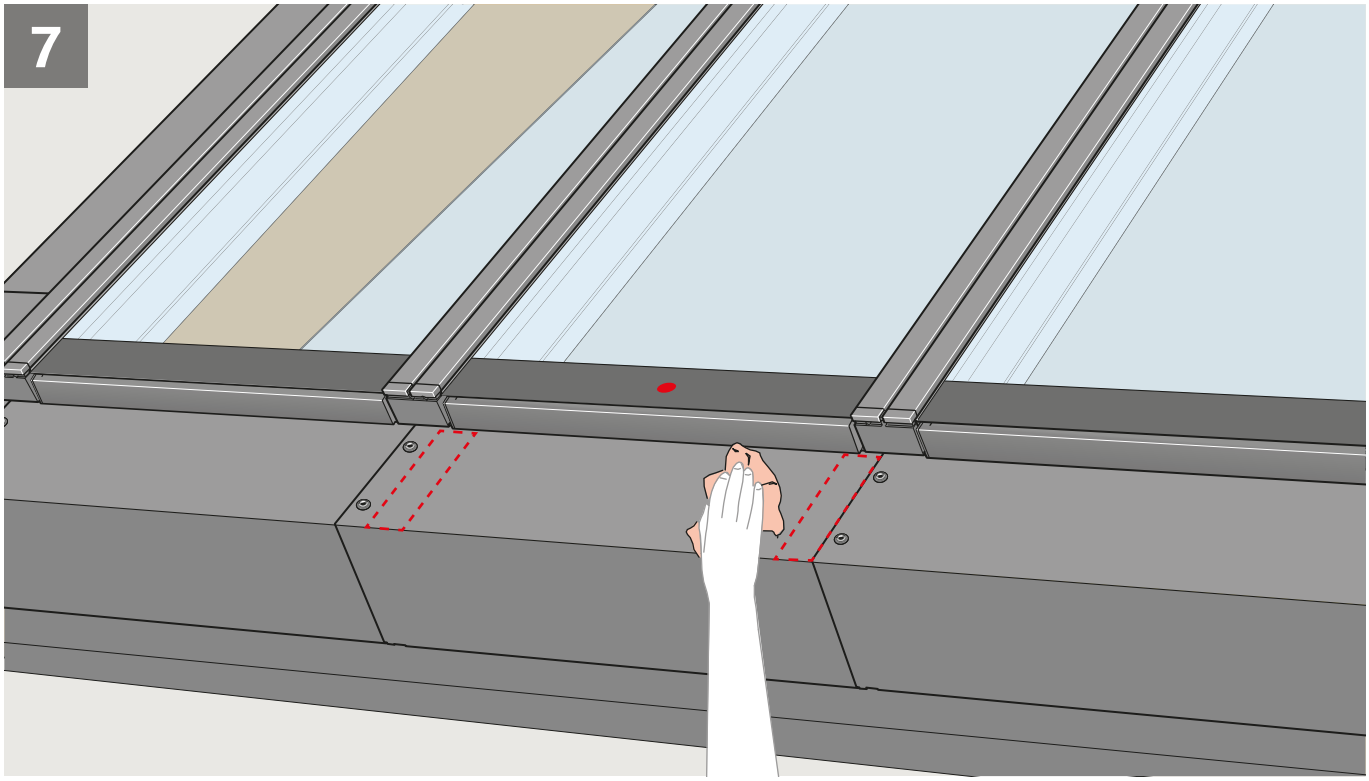
7

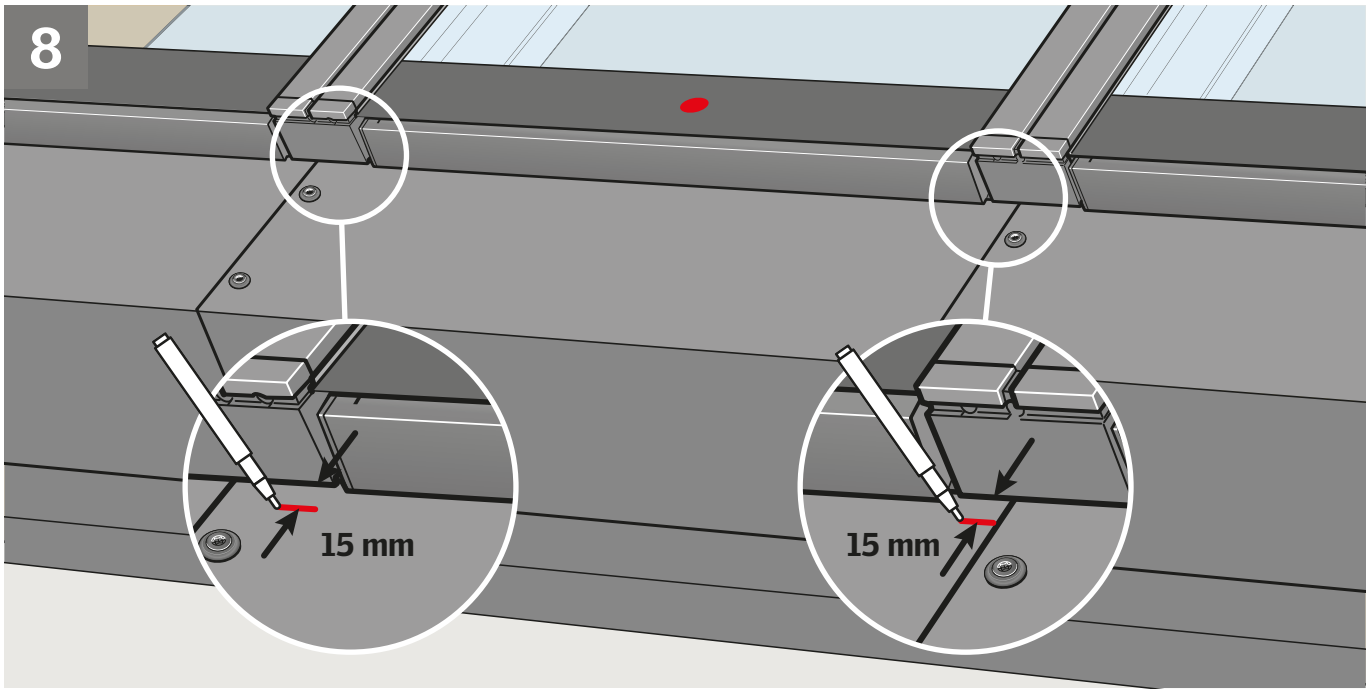
8
15 mm
15 mm

9

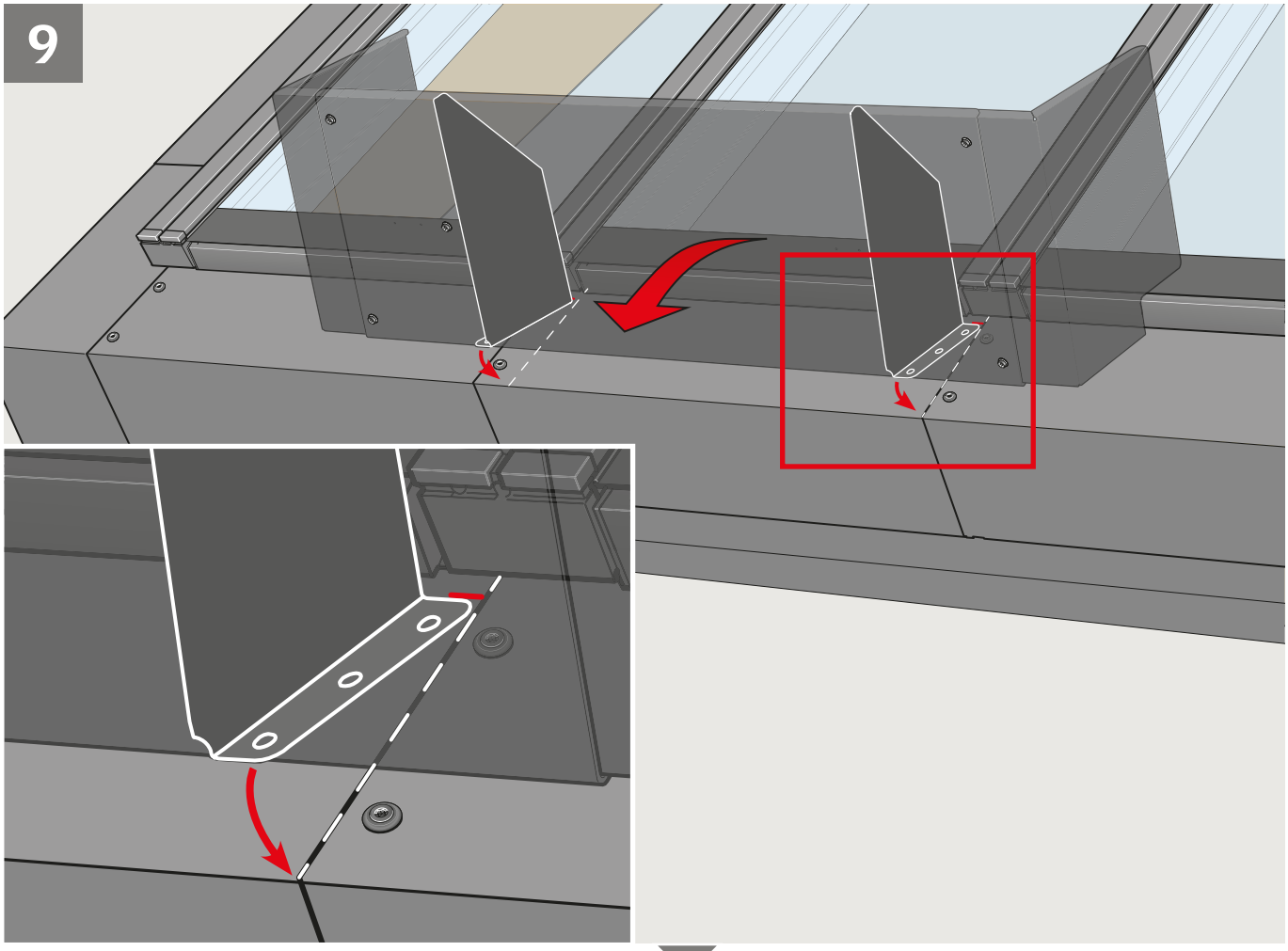

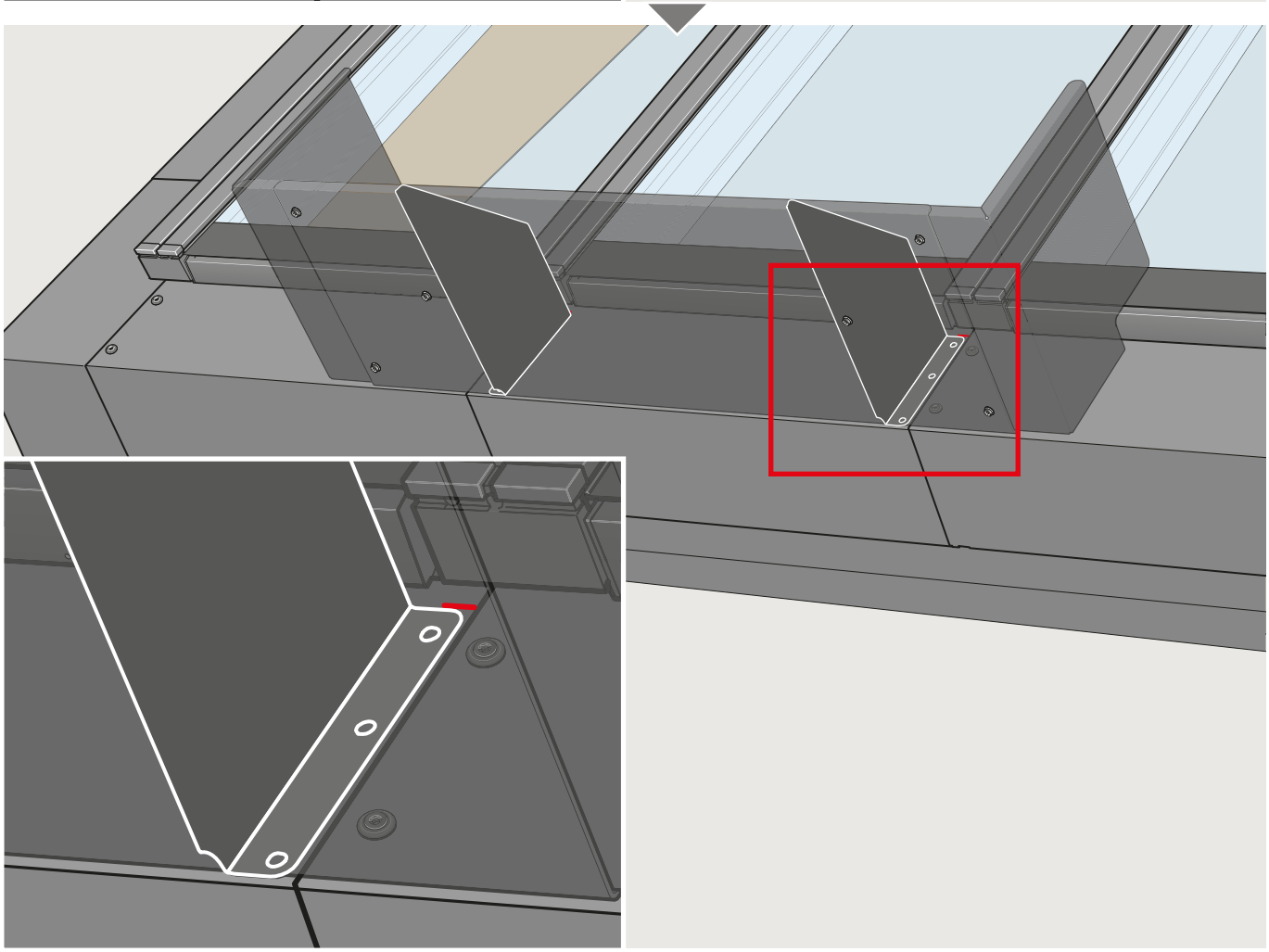

10

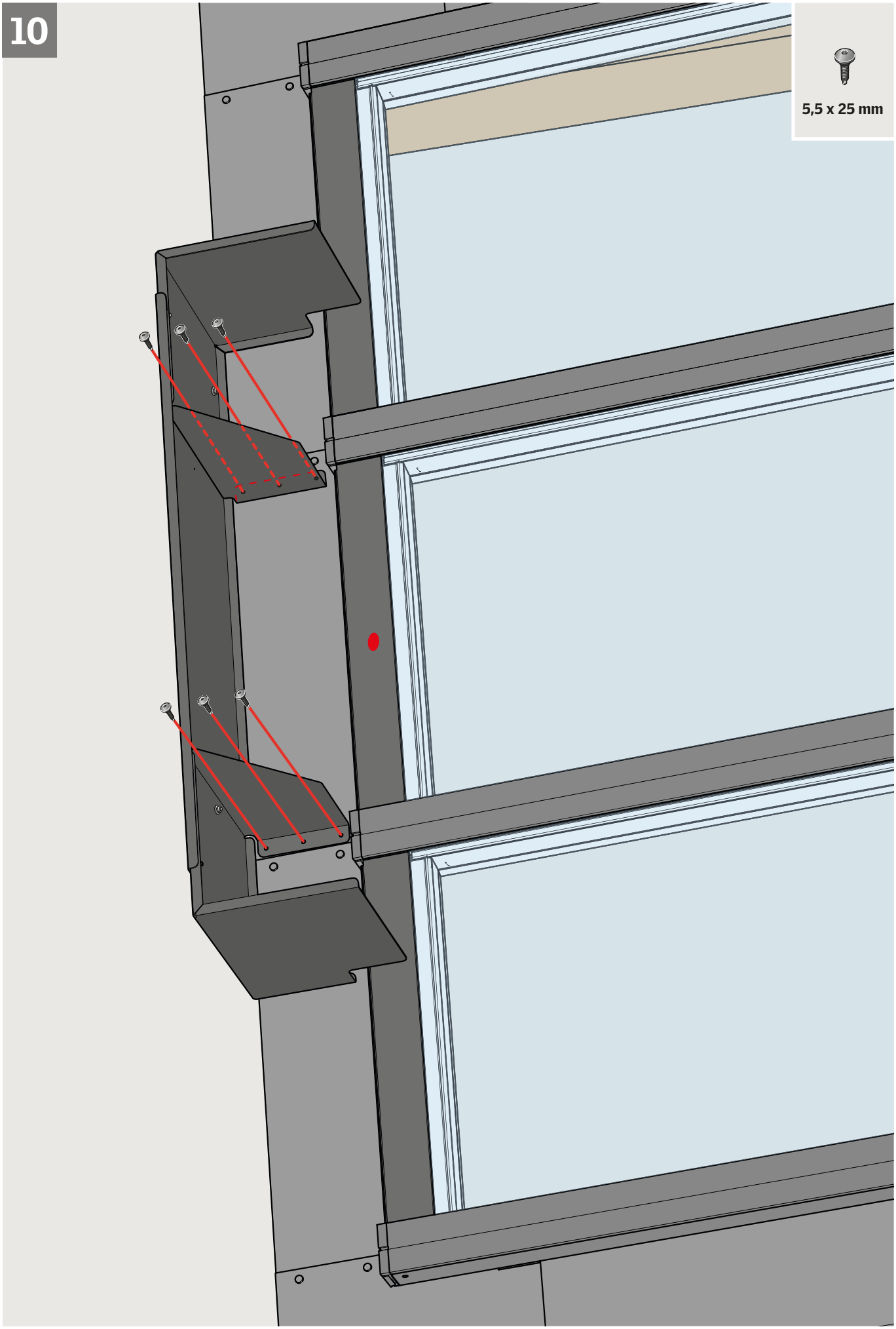

VELUX®

Commercial

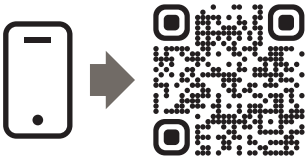

velux.com/contact

www.velux.com

INSTALLATION INSTRUCTIONS FOR KCD. ©2019, 2025 VELUX GROUP. ®VELUX AND THE VELUX LOGO ARE REGISTERED TRADEMARKS USED UNDER LICENCE BY THE VELUX GROUP