VELUX®

HFC/HVC + ELC

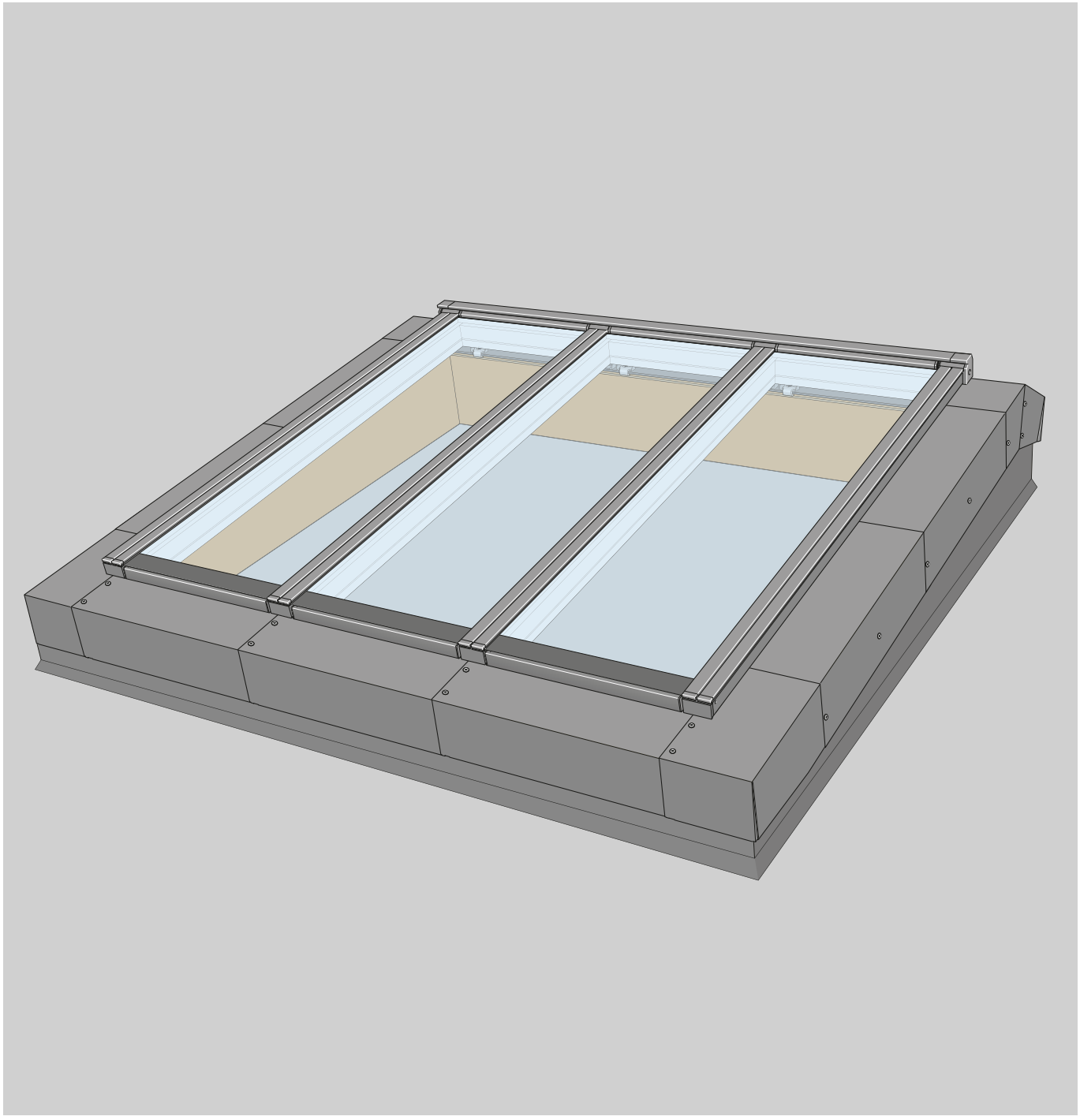

5°-30°

VAS 454373-2025-10

A1-L

HFC/HVC + ELC

HVC CE all

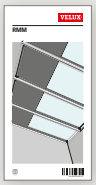

RMM

A2-L

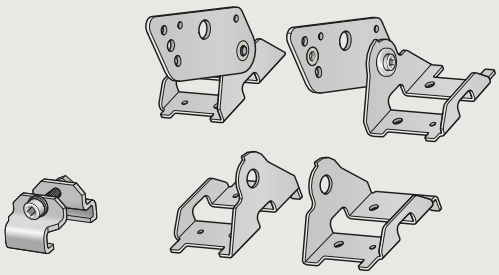

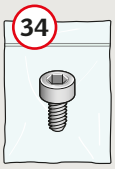

ø 8 mm

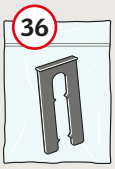

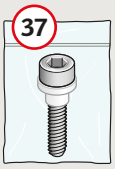

M8 x 30 mm

A3-L

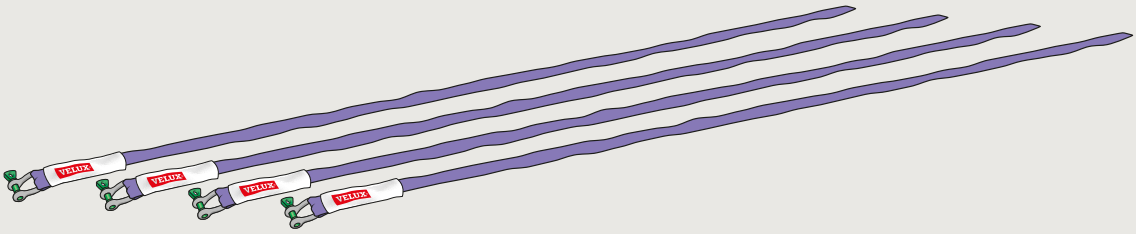

B1-L

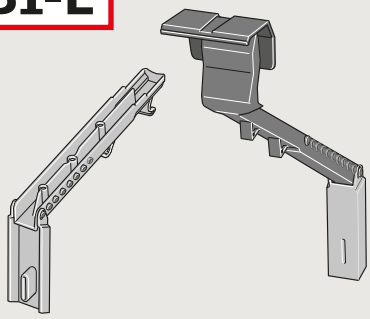

5,5 x 27 mm

B2-L

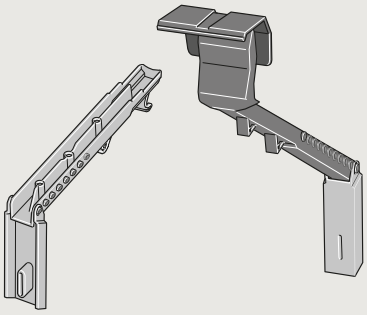

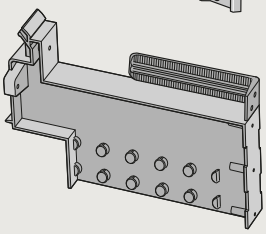

5,5 x 27 mm

4 x 45 mm

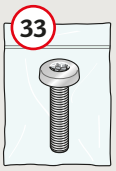

M4 x 25 mm

C1-L

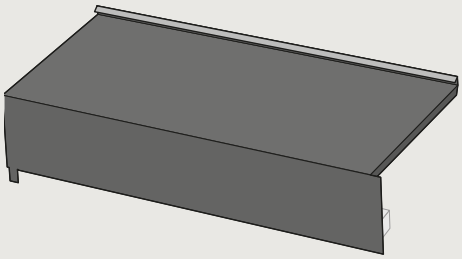

C2-L

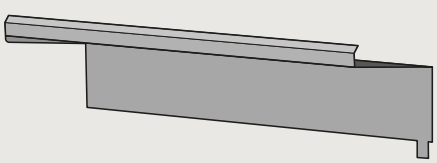

C3-L

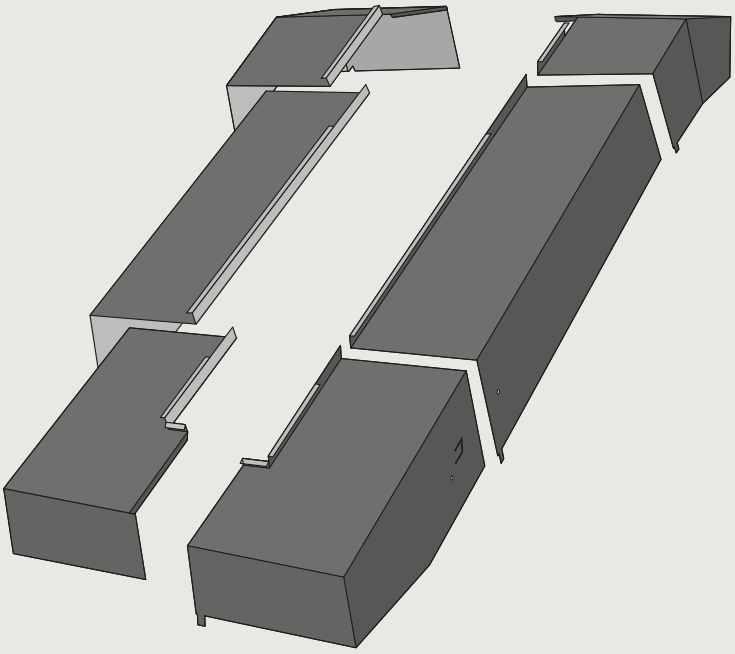

D1-L

D2-L

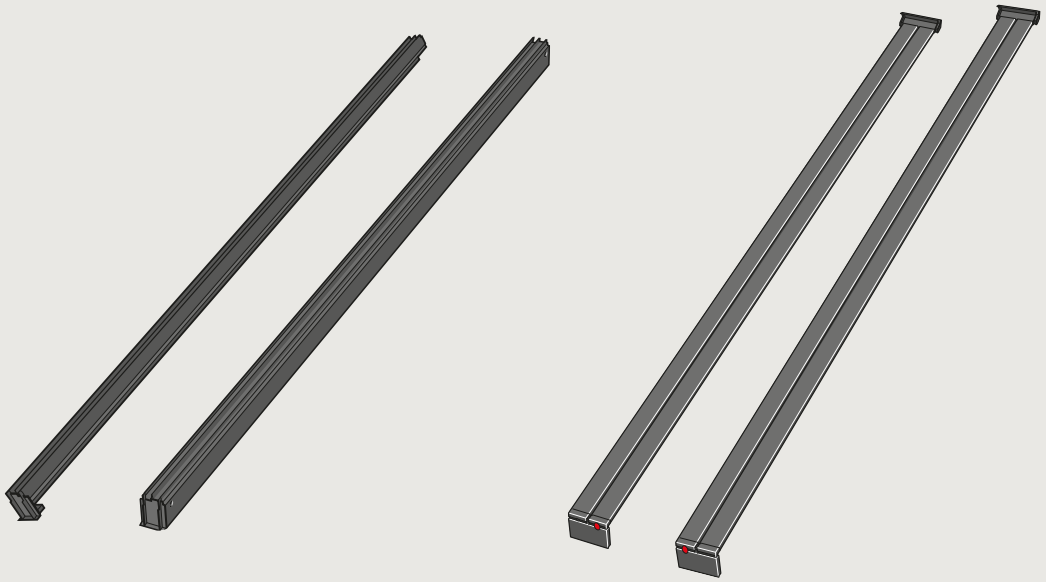

D3-L

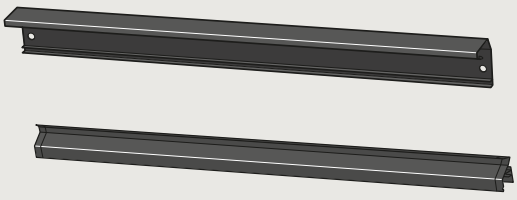

D4-L

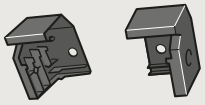

VELUX

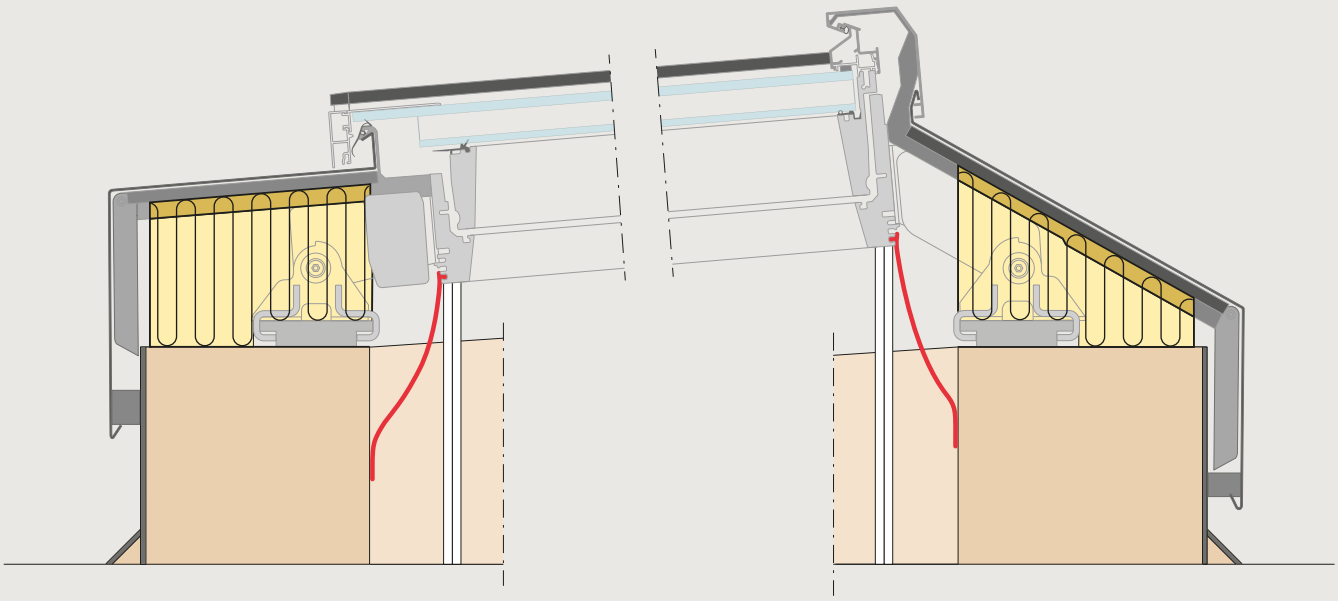

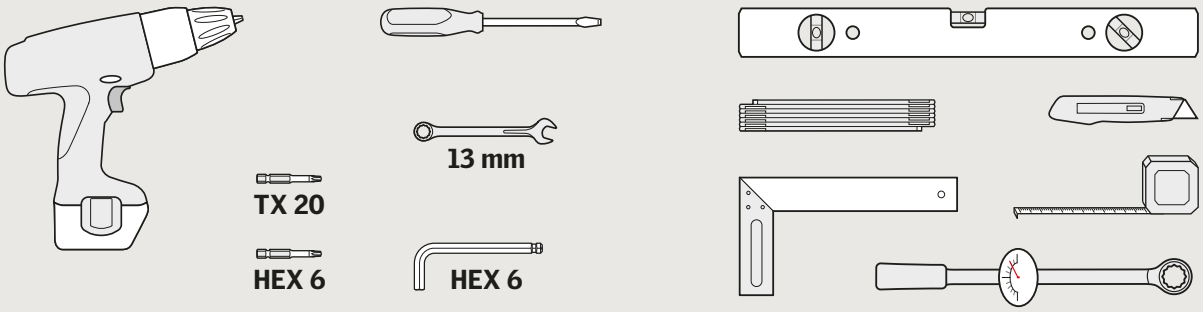
TX 20
13 mm
HEX 6
HEX 6

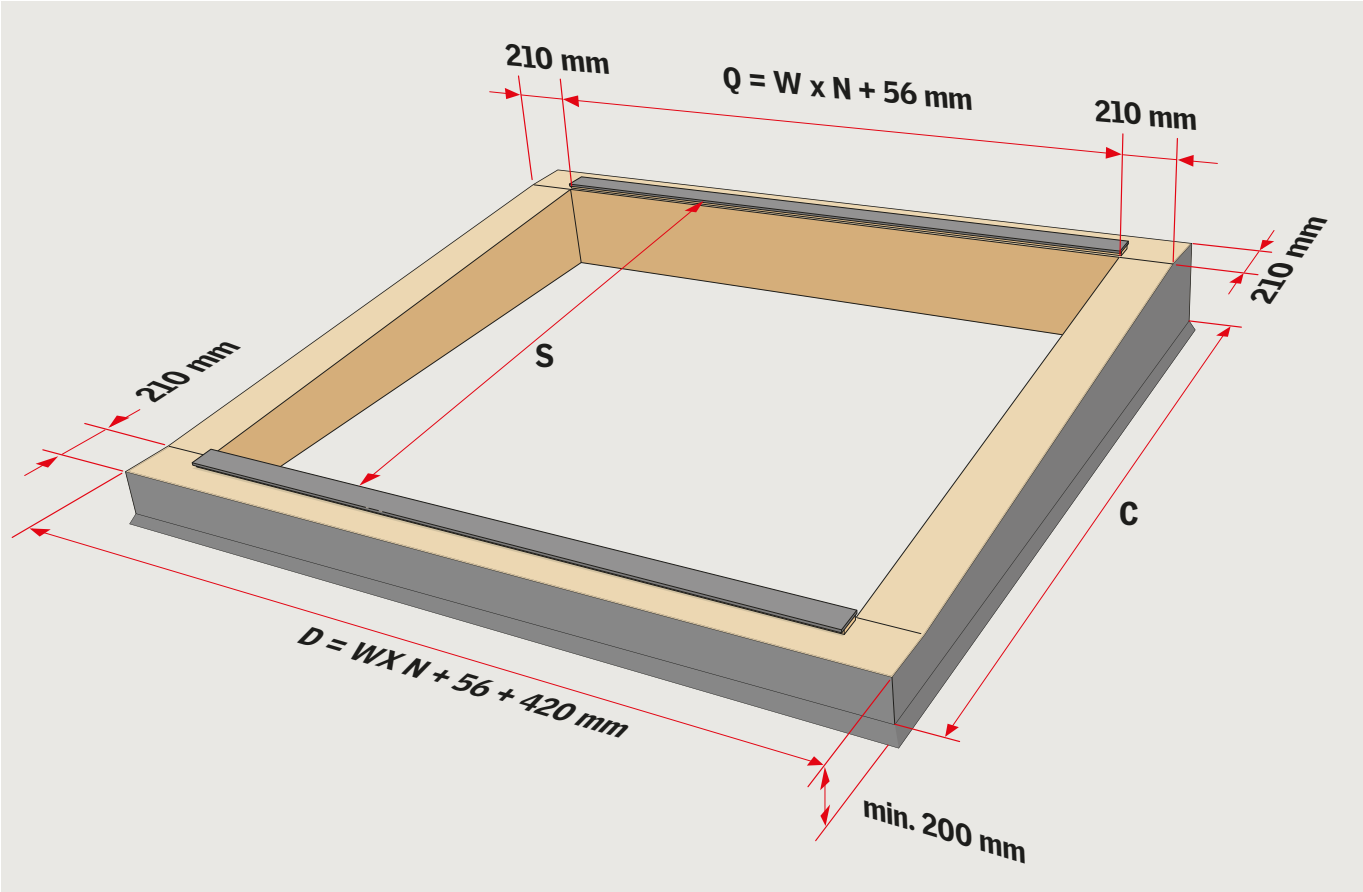

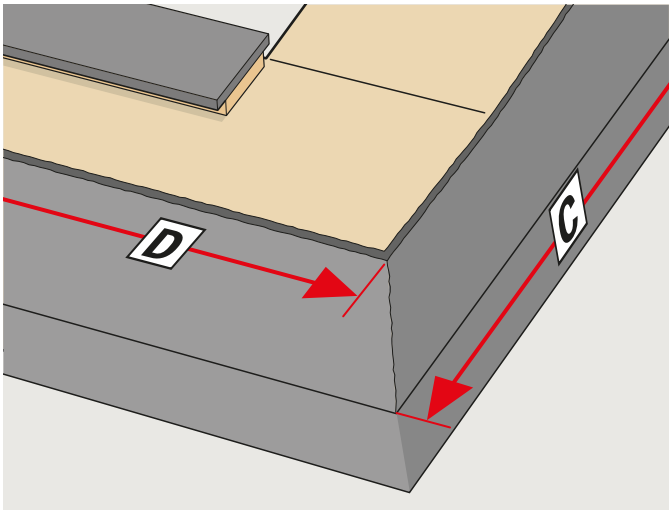

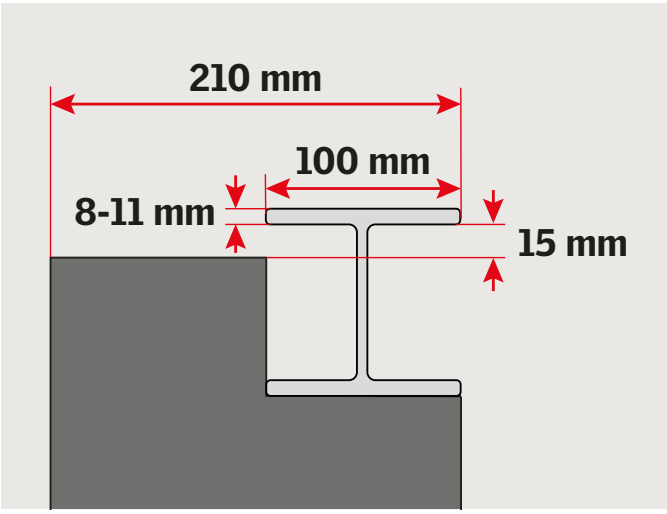

W mm / H mm / N

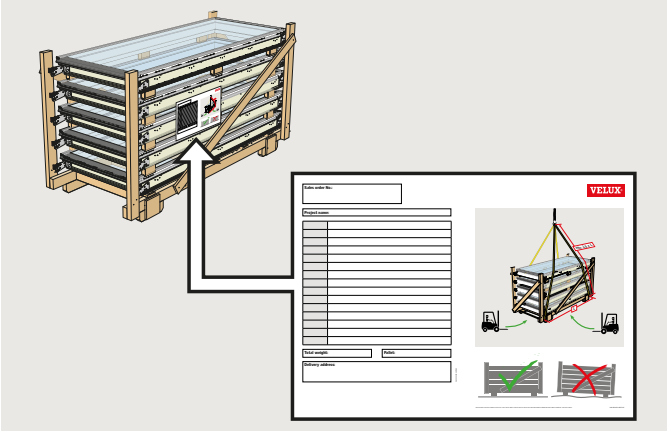

C mm / D mm / S mm / Q mm

1

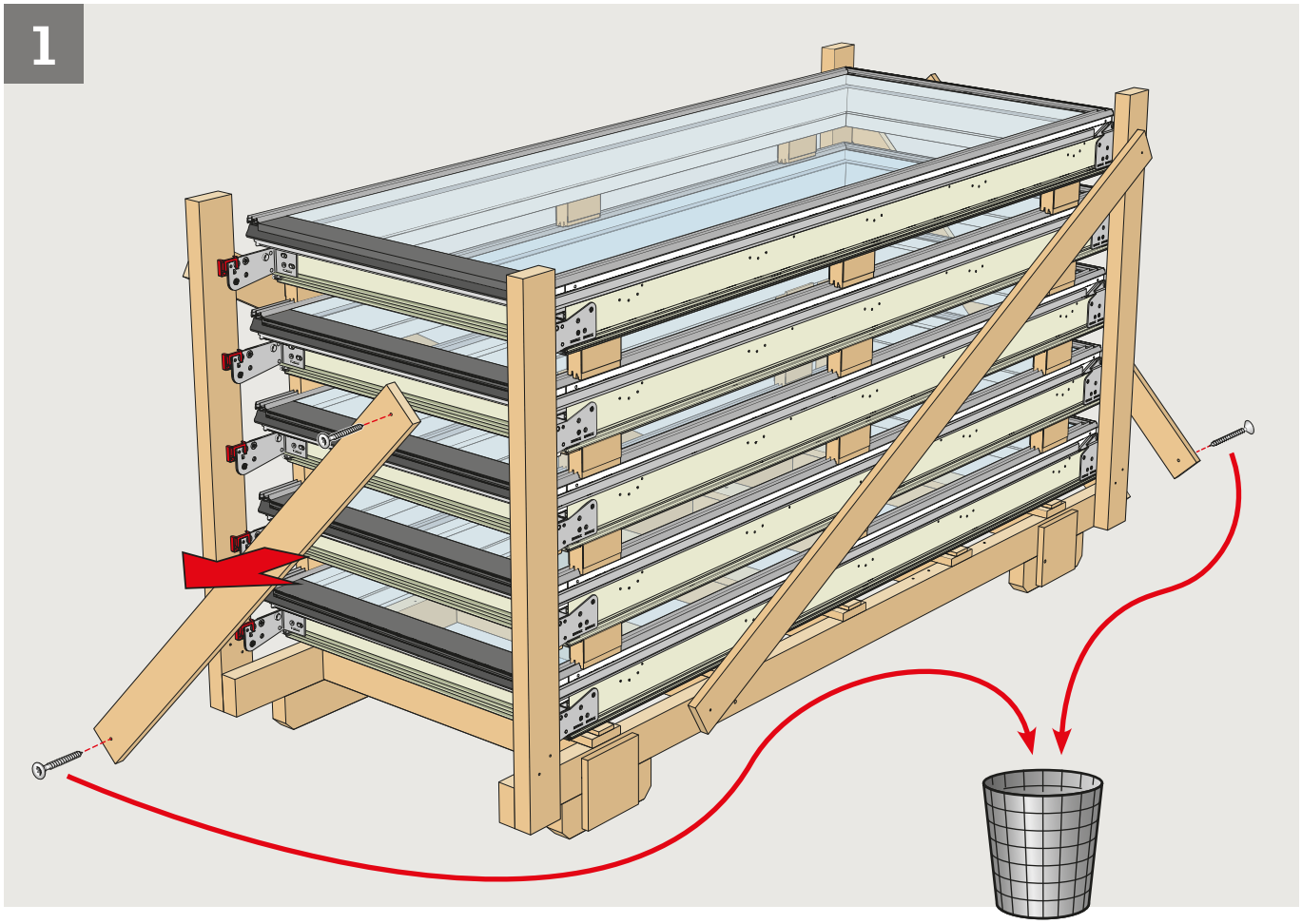

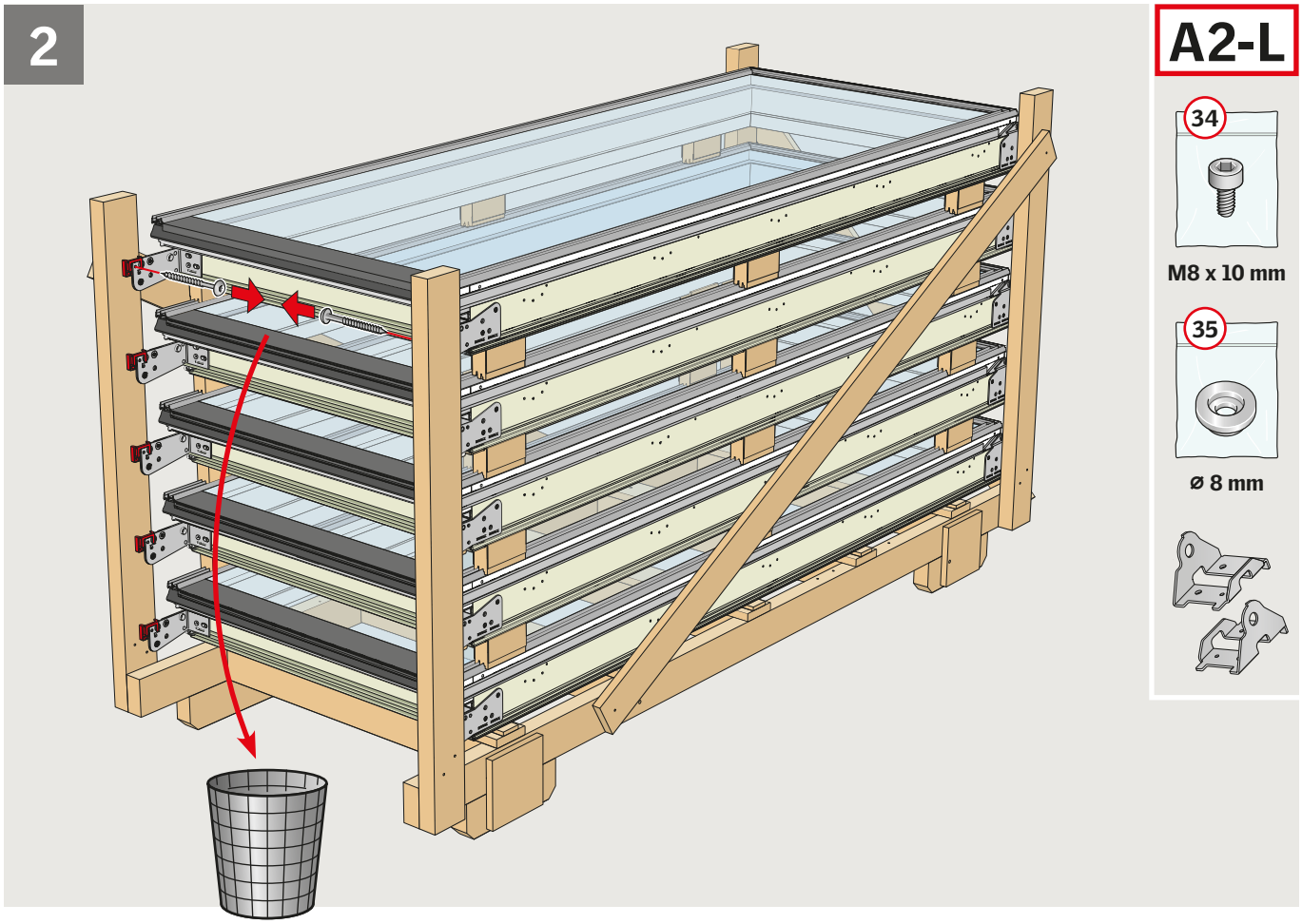
2
A2-L
34
M8 x 10 mm
35
ø 8 mm

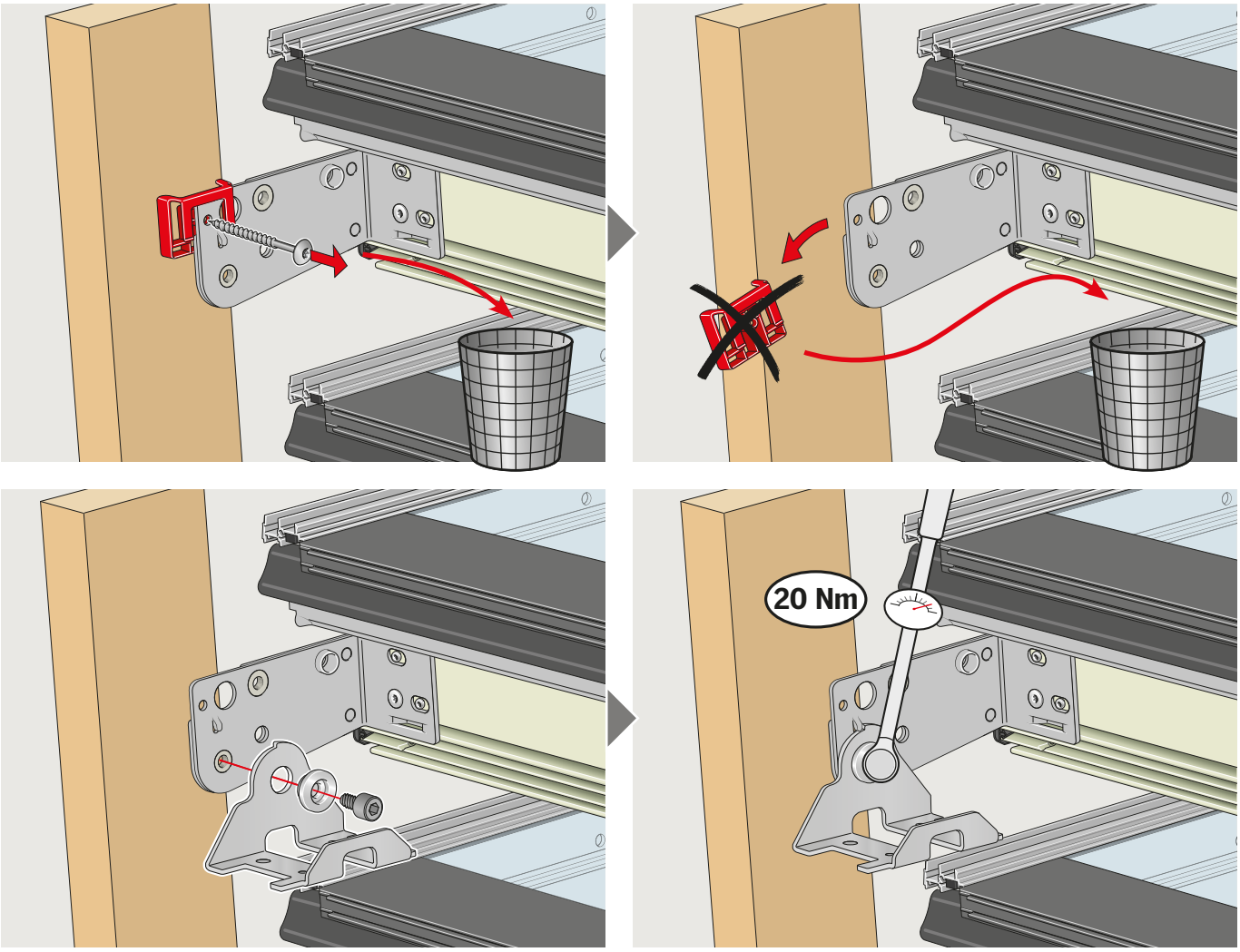
20 Nm

3

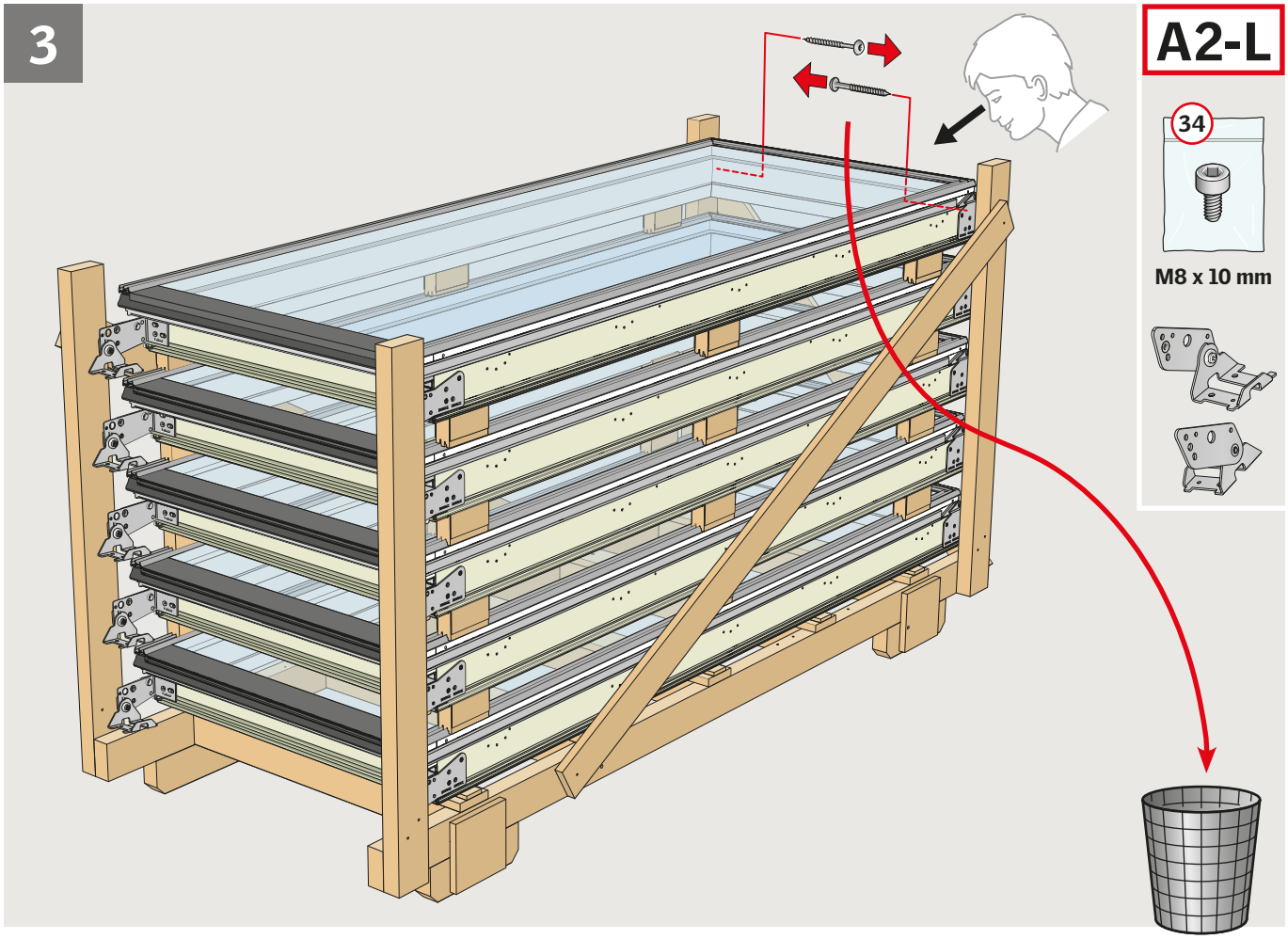

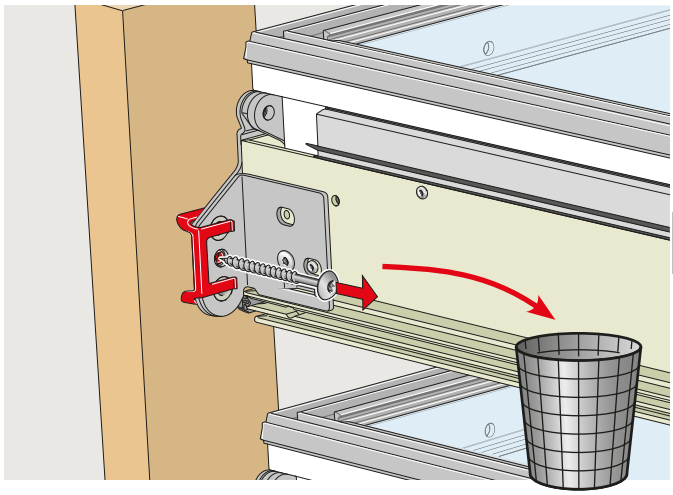

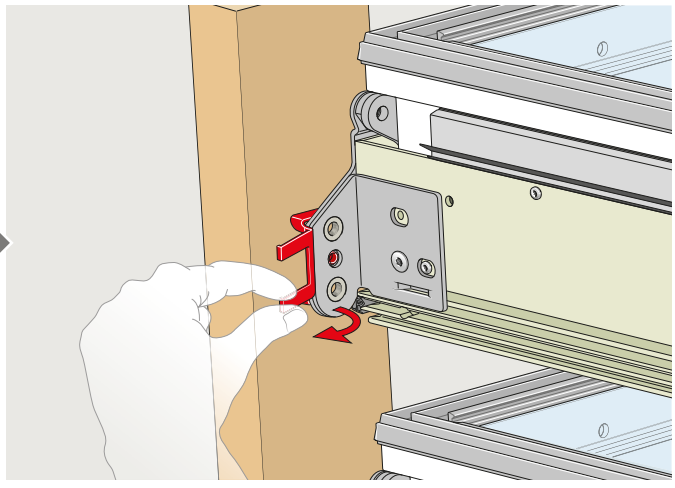

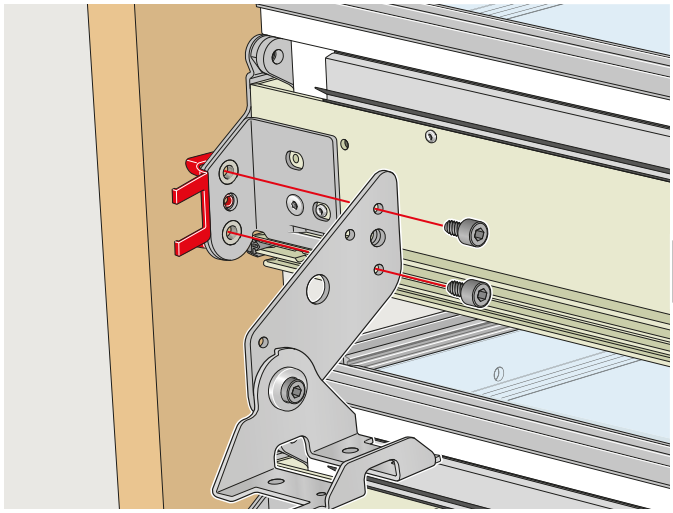

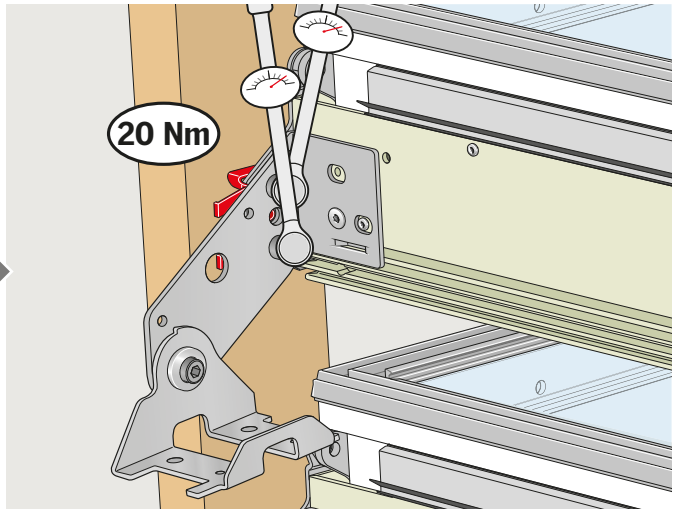

4

A3-L

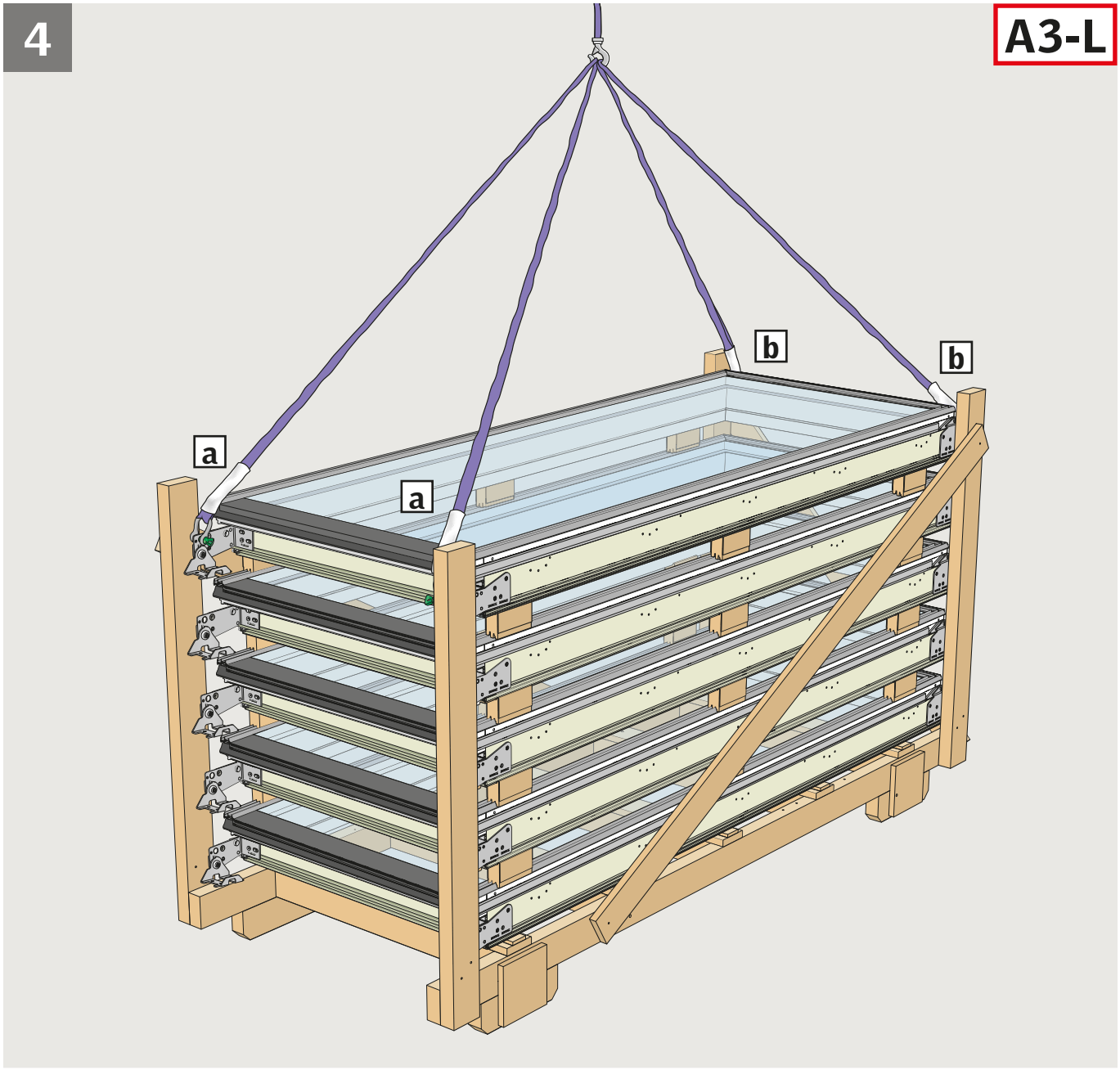

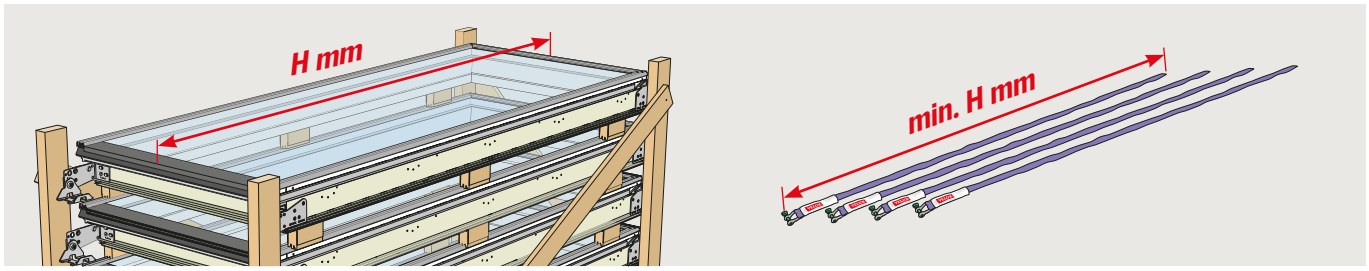

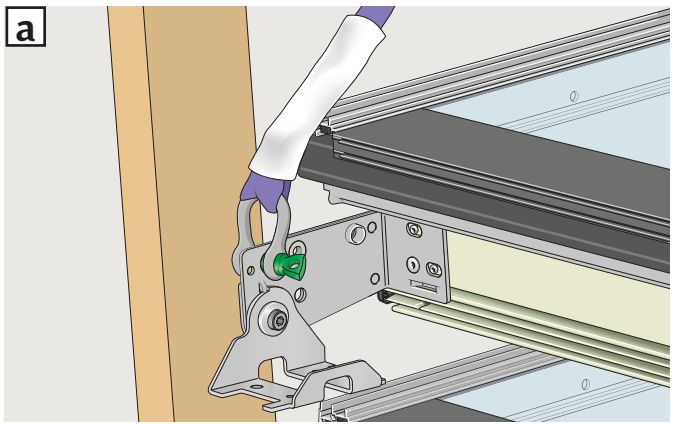

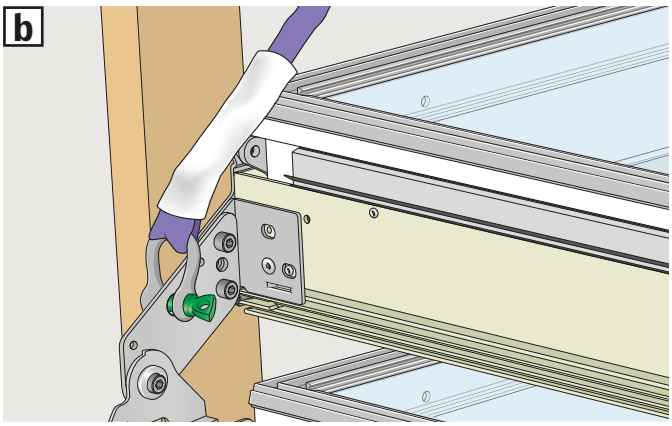

5a

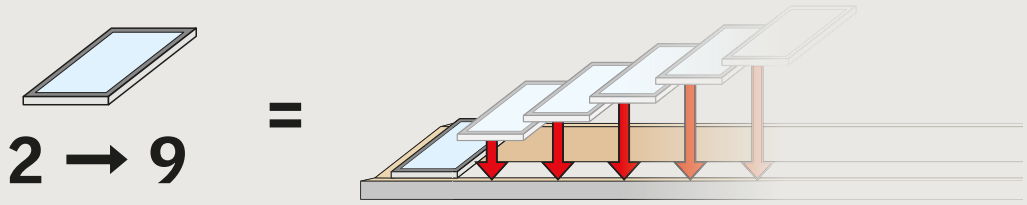

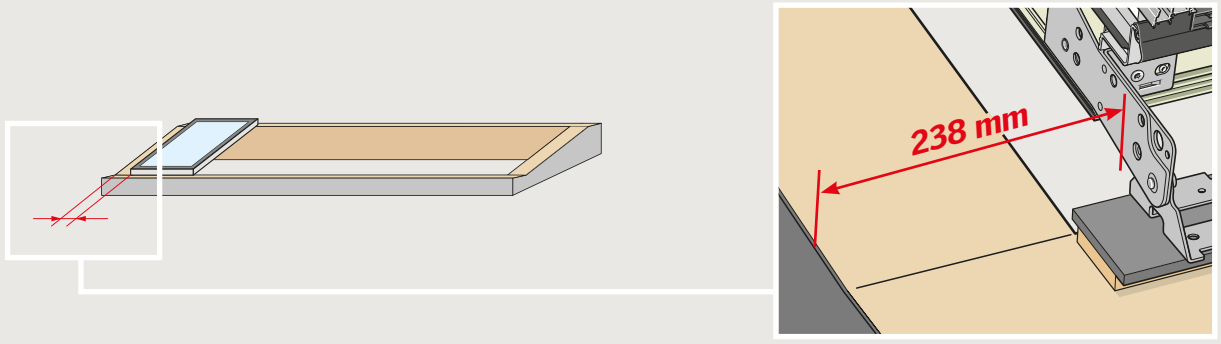

5b

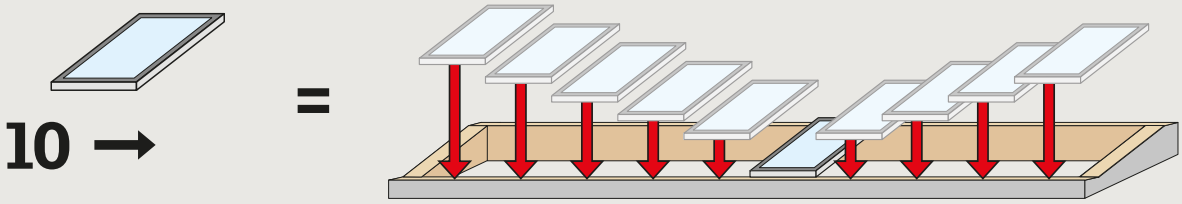

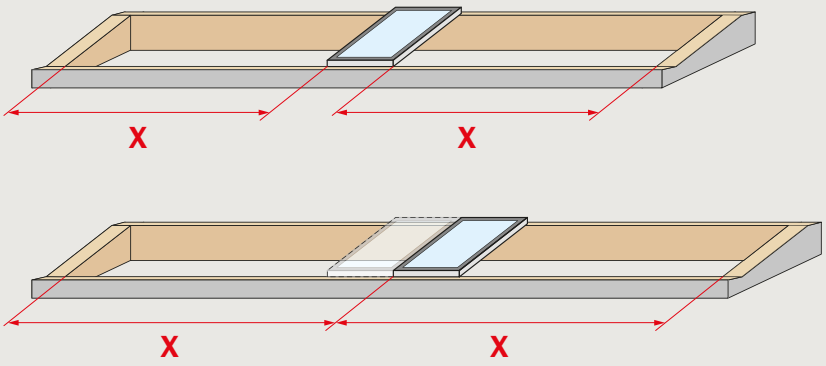

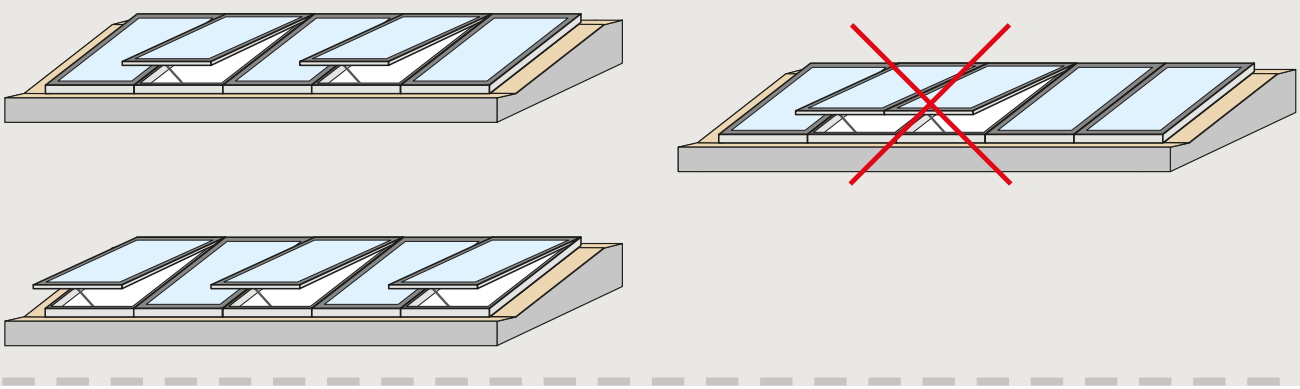

6

A2-L

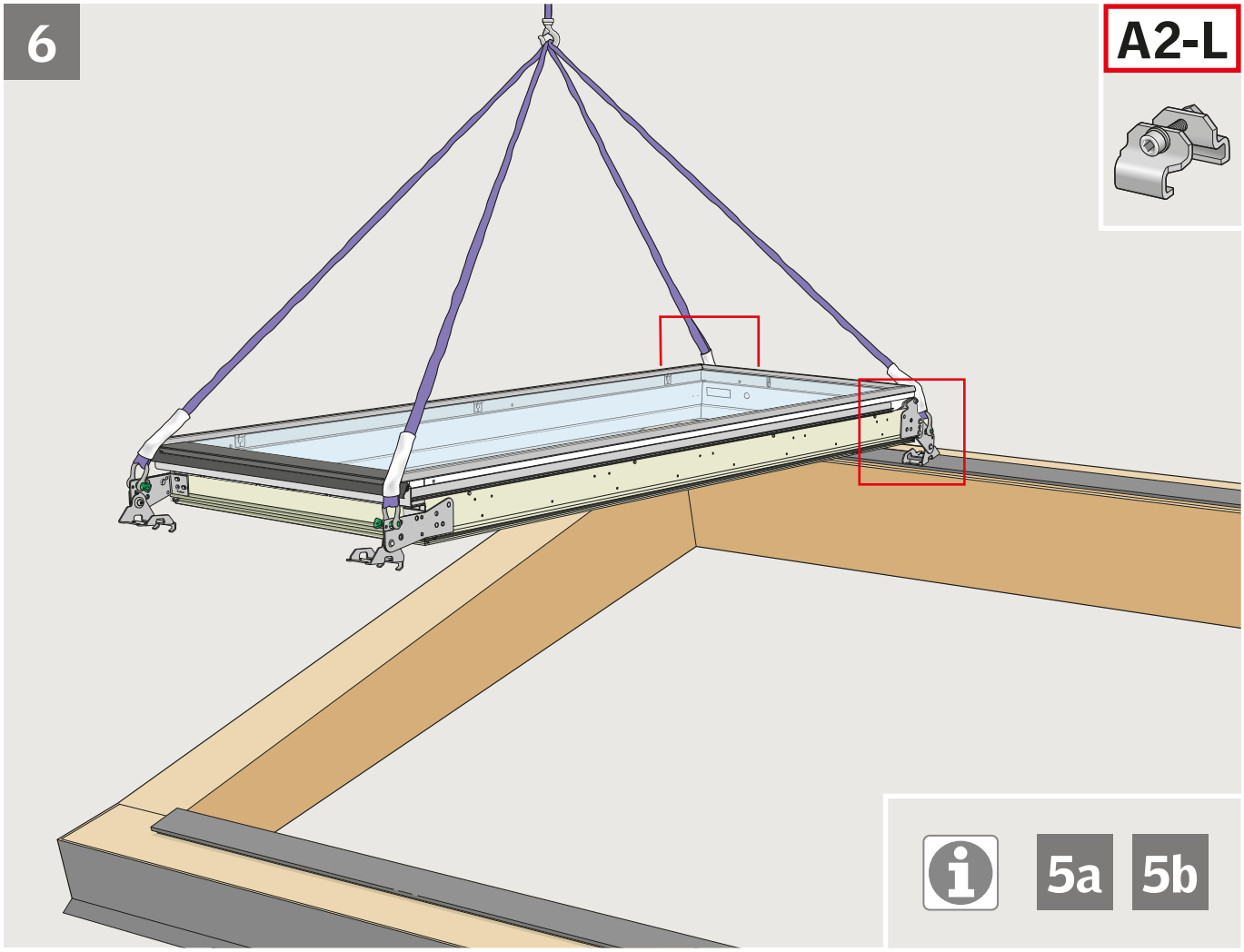

5a 5b

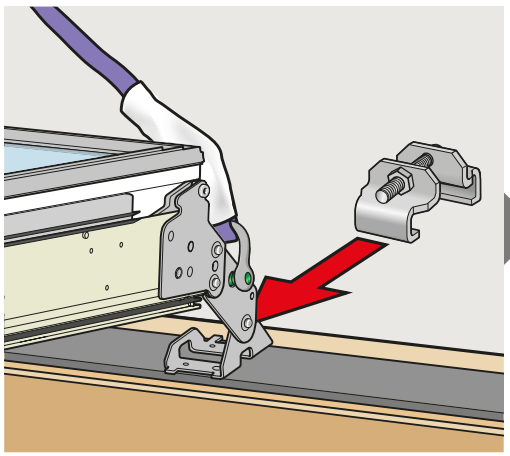

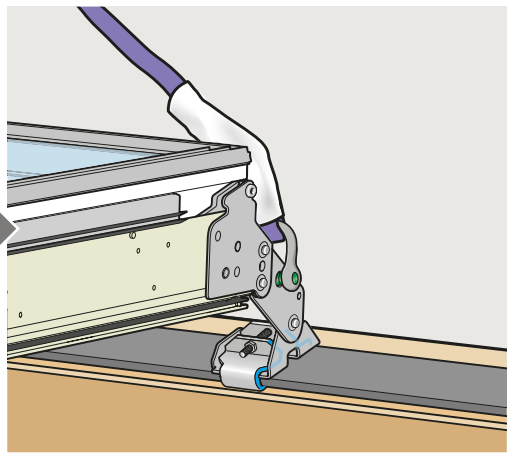

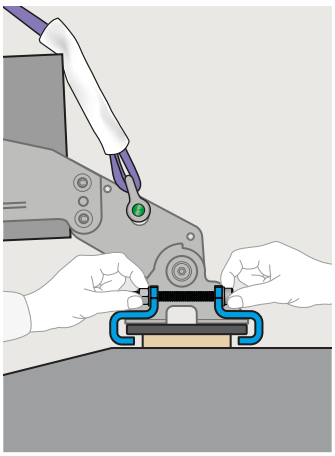

7

A2-L

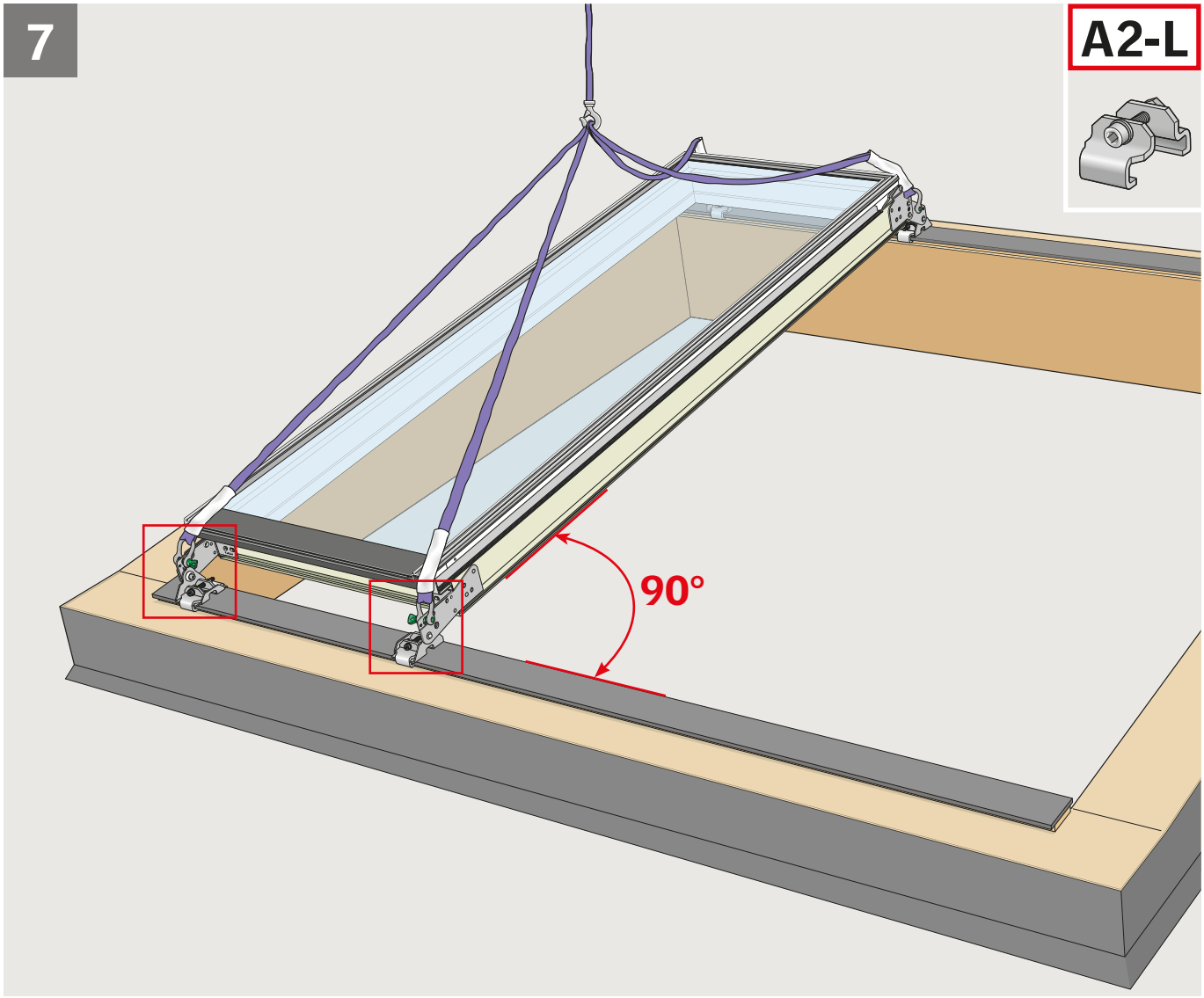

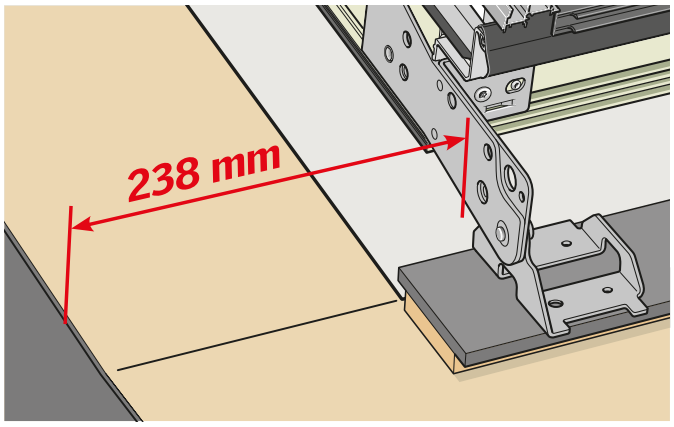

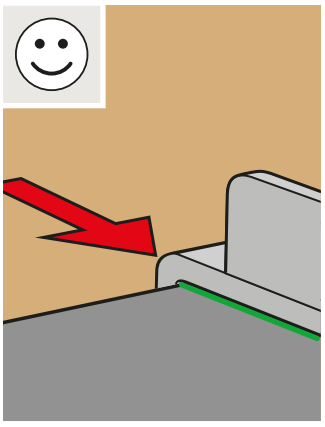

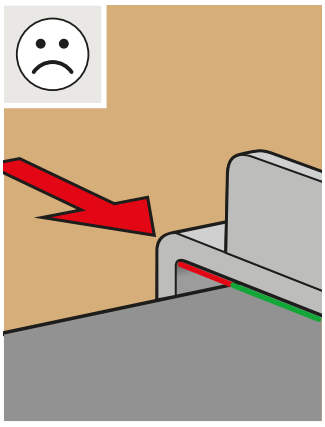

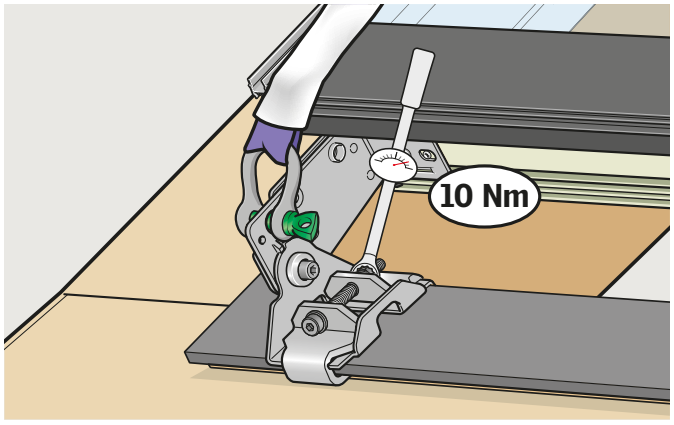

8

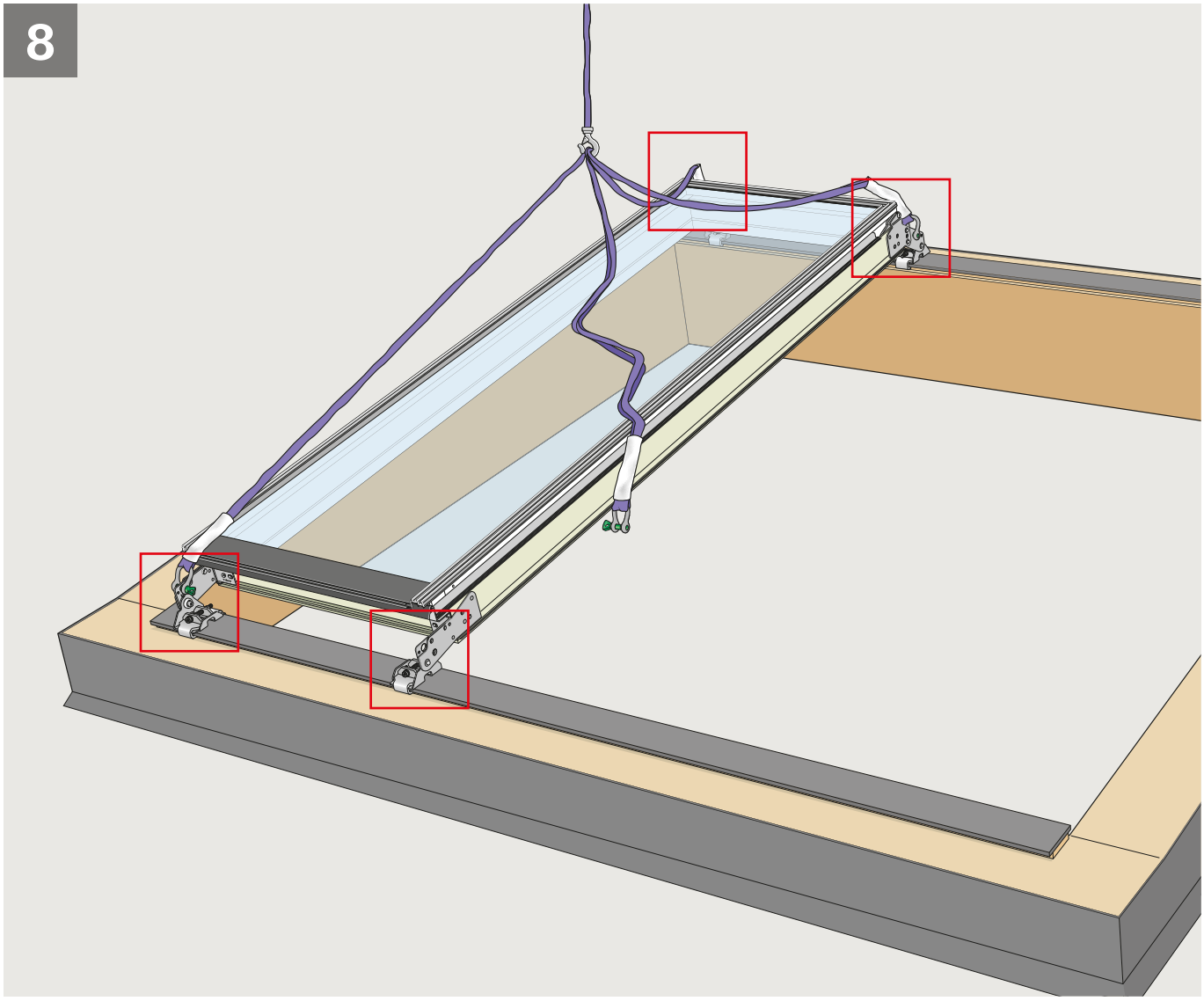

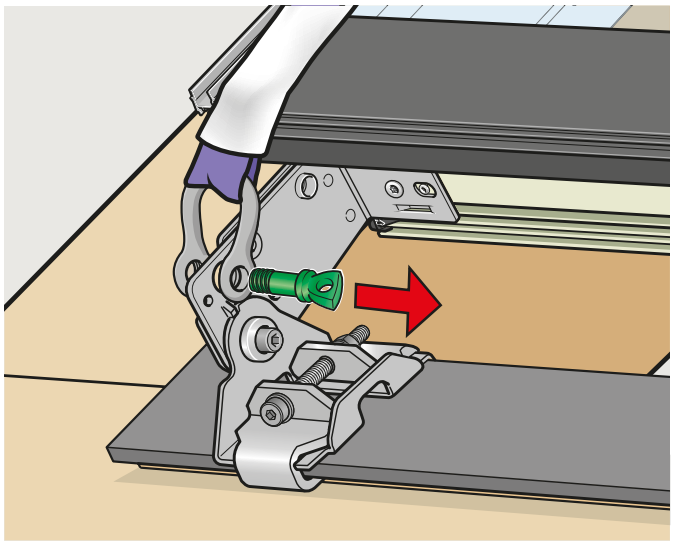

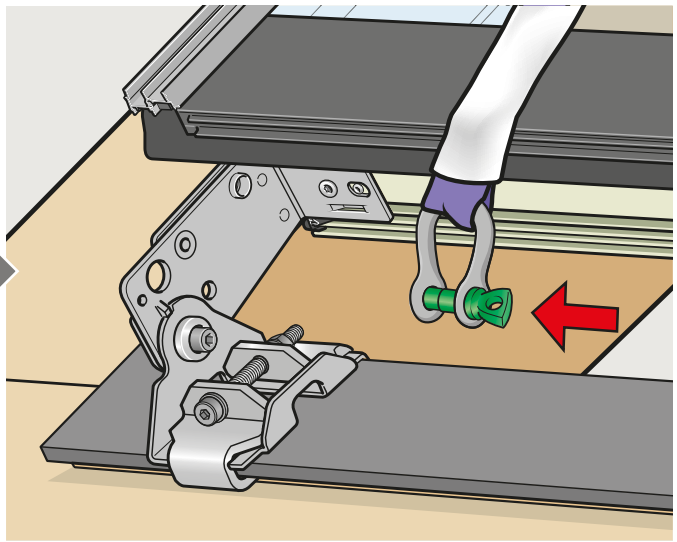

9

A2-L

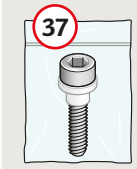

M8 x 30 mm

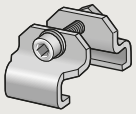

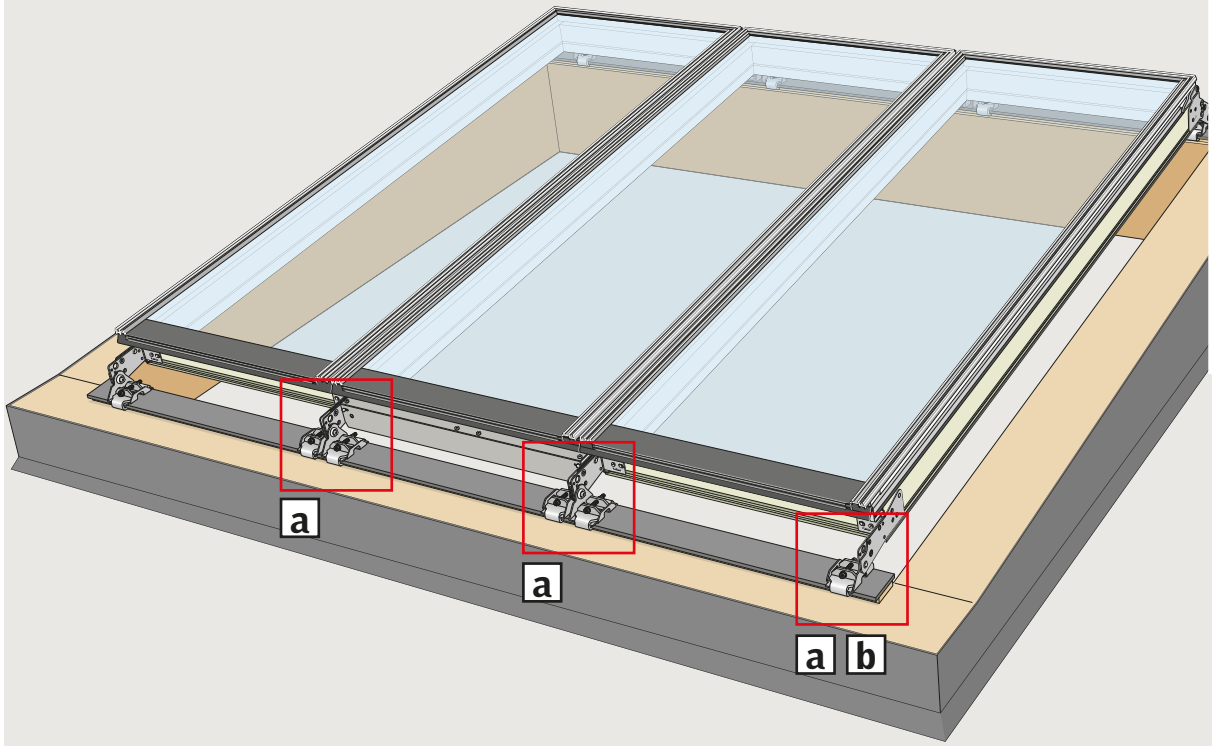

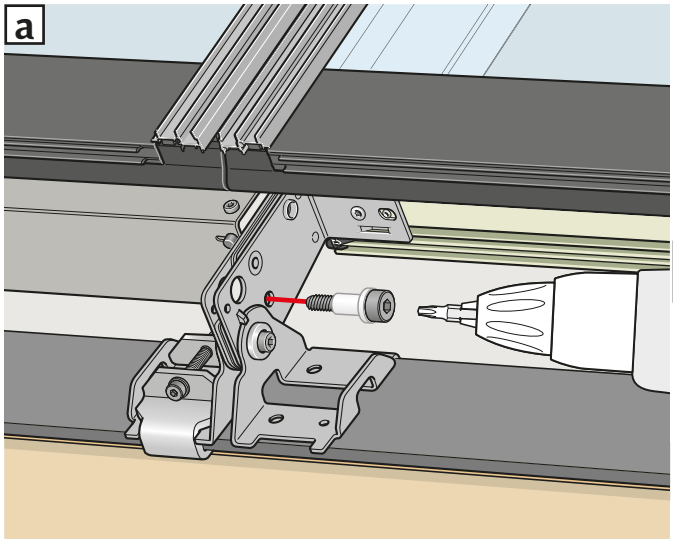

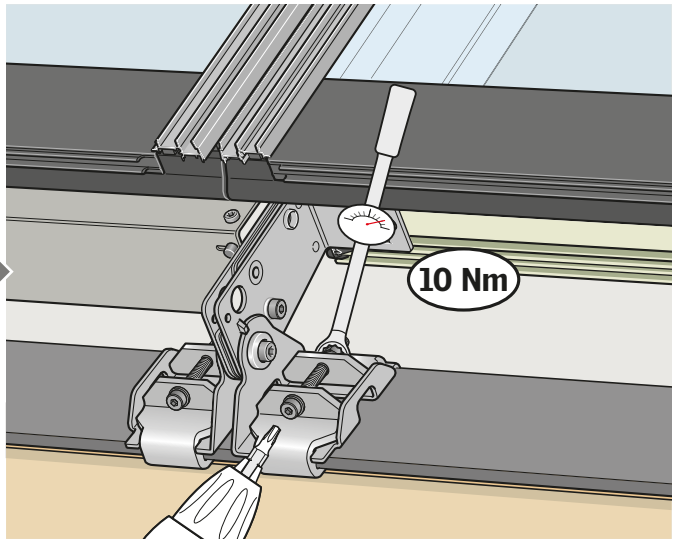

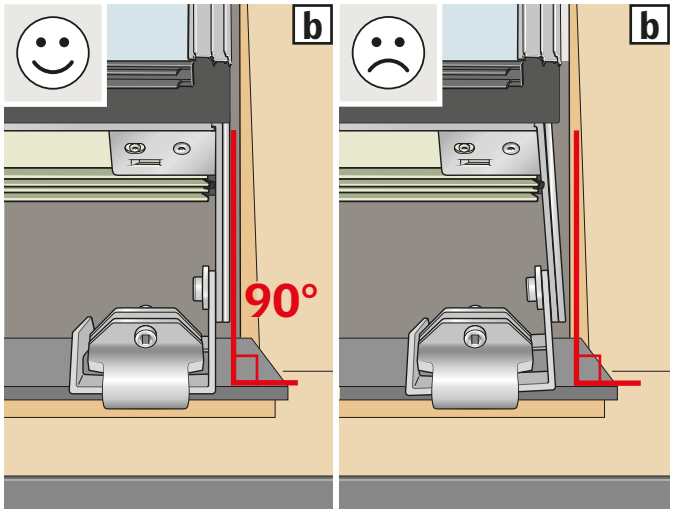

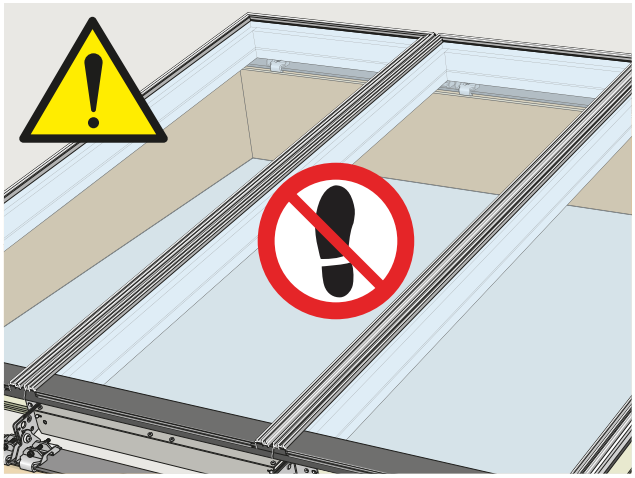

10

A2-L

M8 x 30 mm

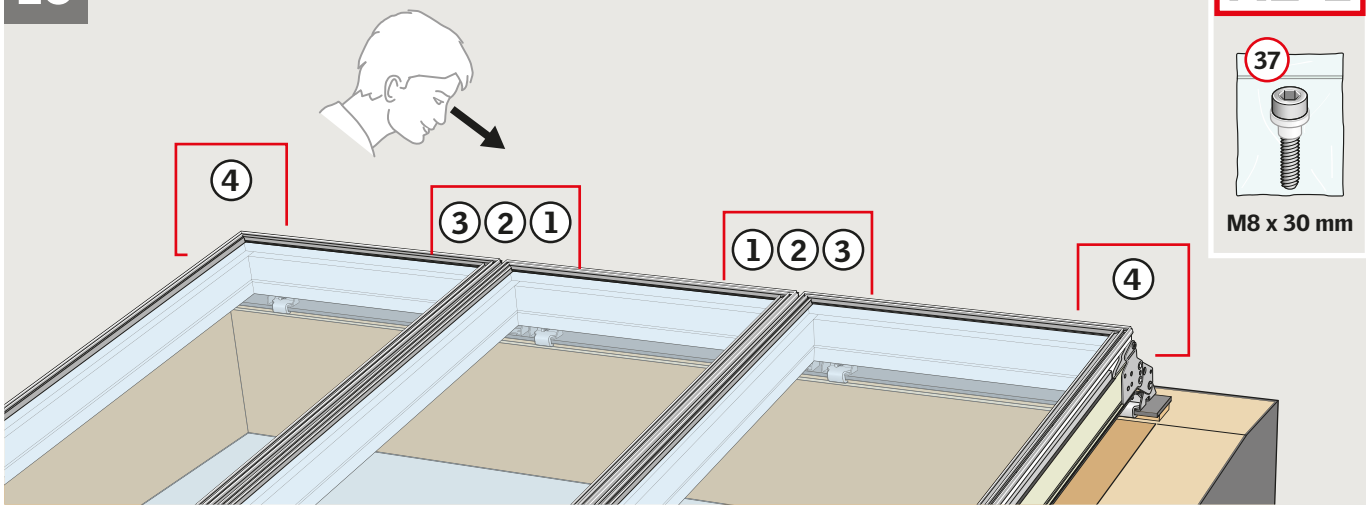

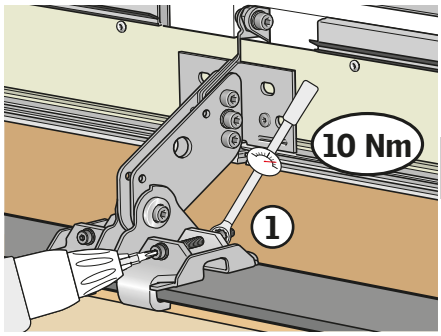

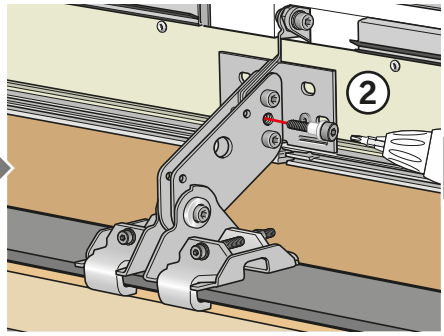

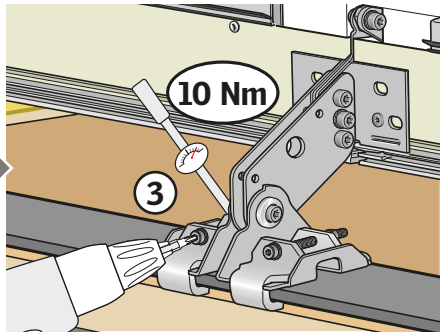

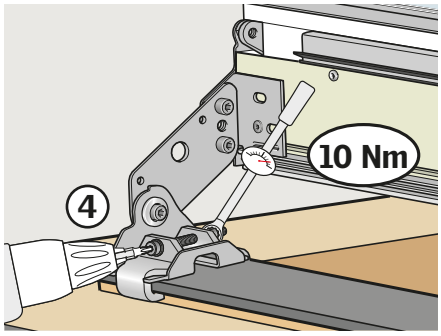

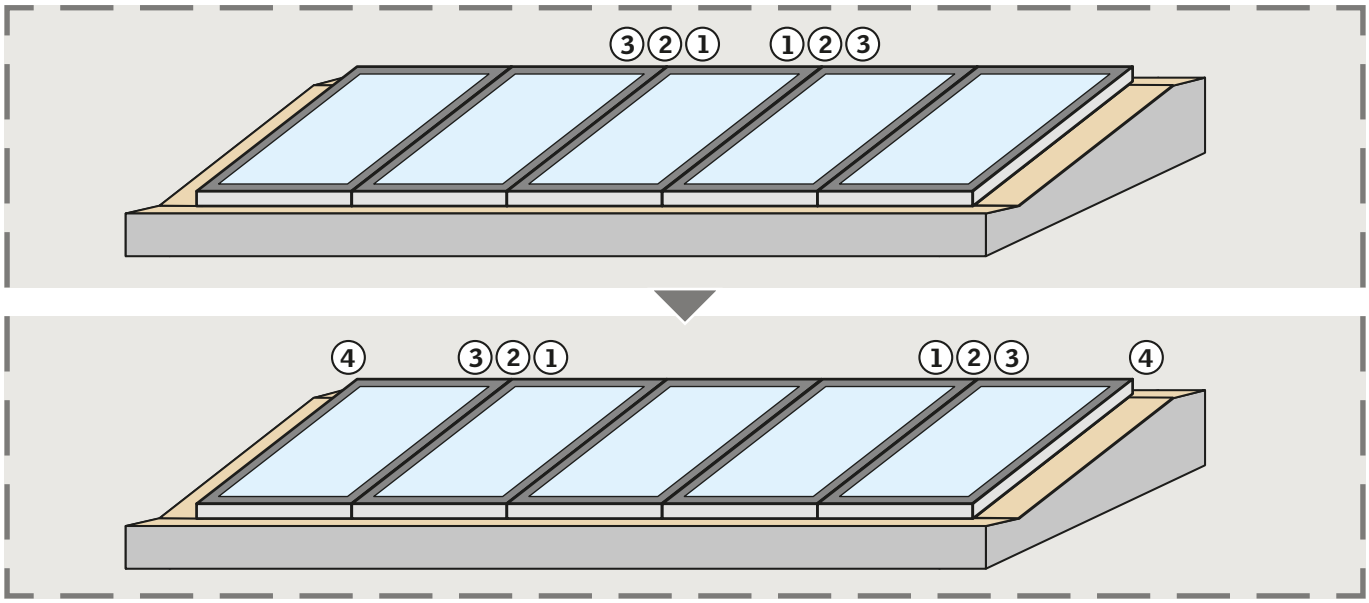

11

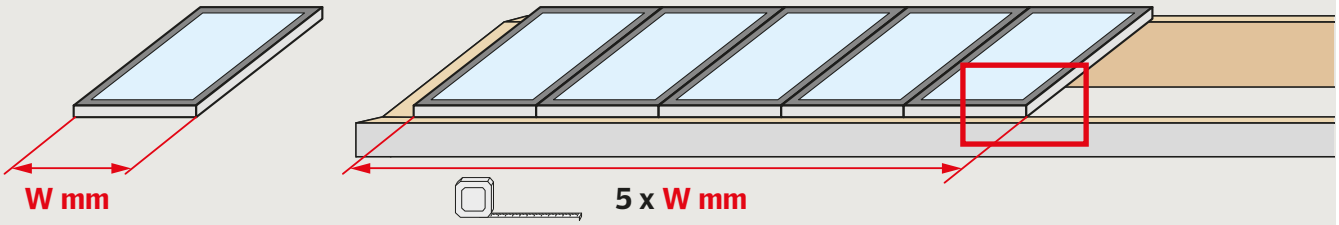

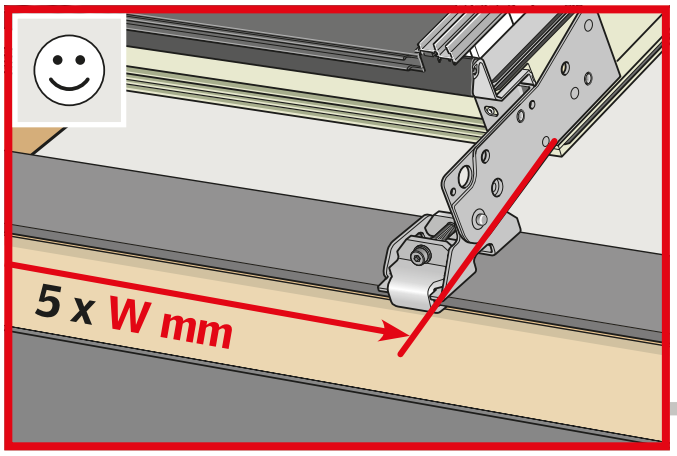

12

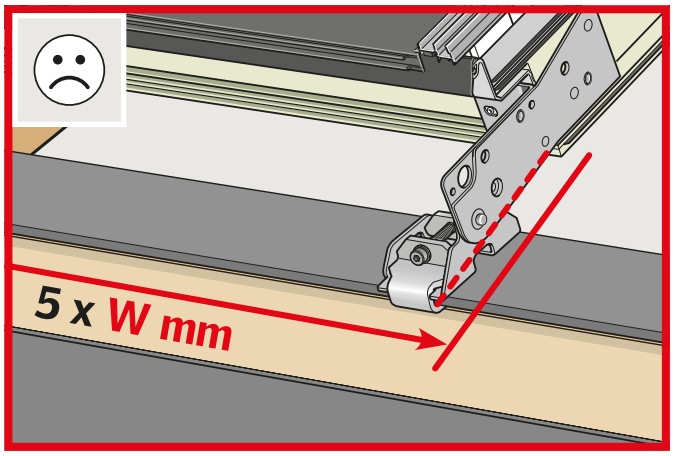

A2-L

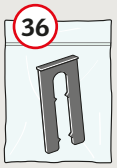

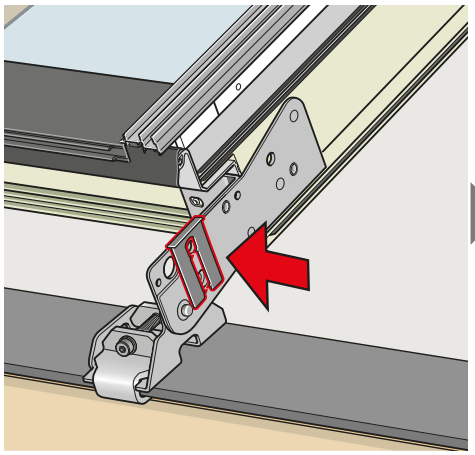

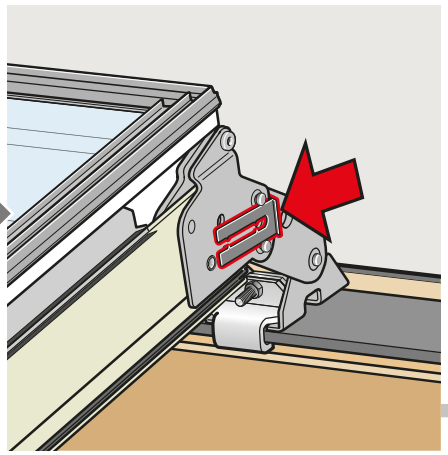

12

12

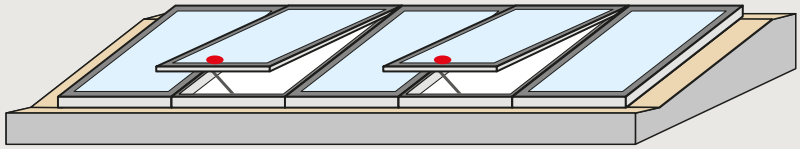

KLC 400

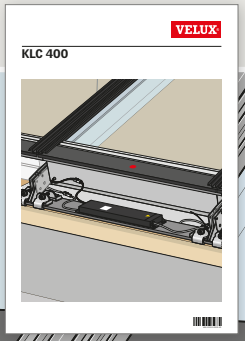

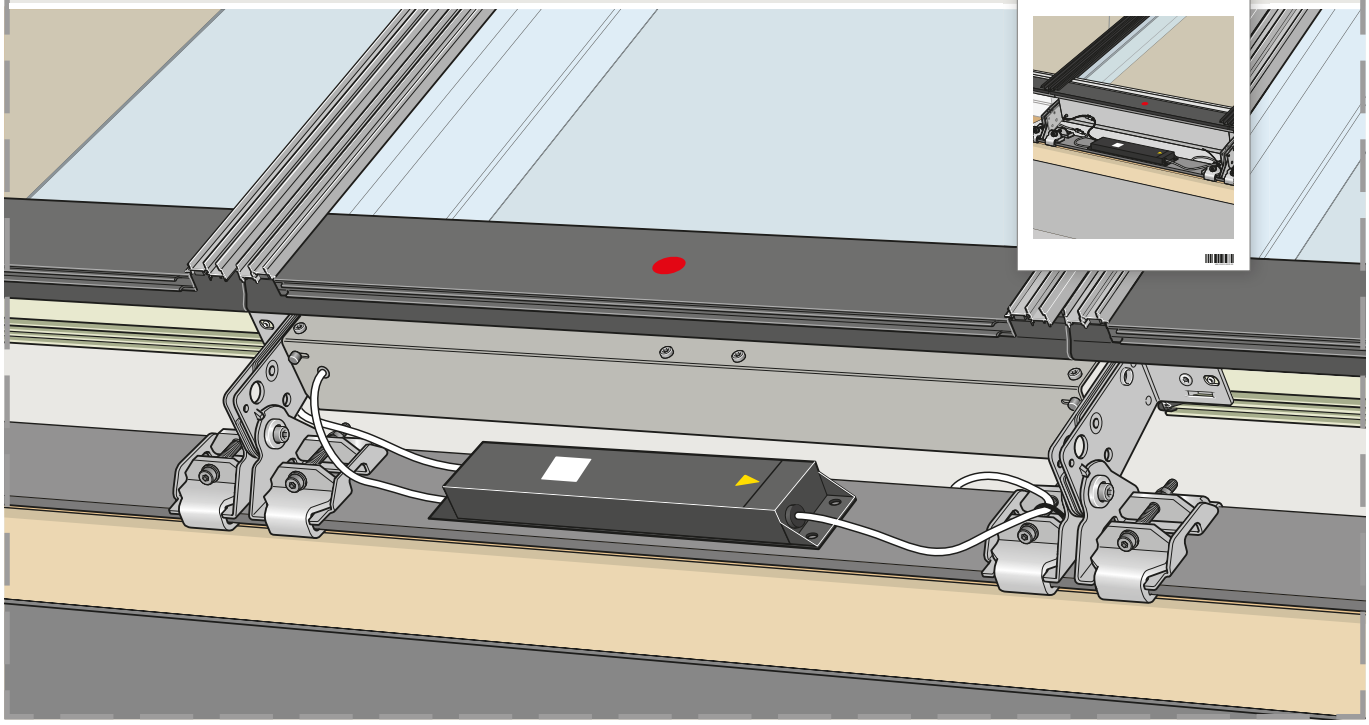

BCX

BCX

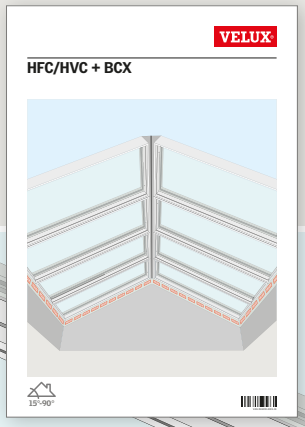

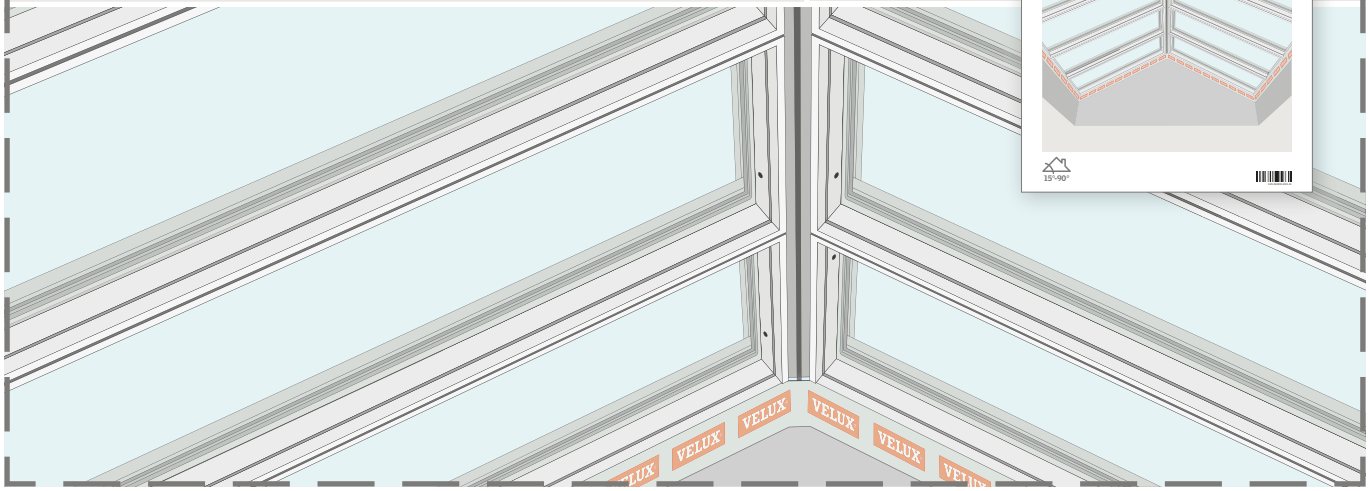

13

B1-L

B2-L

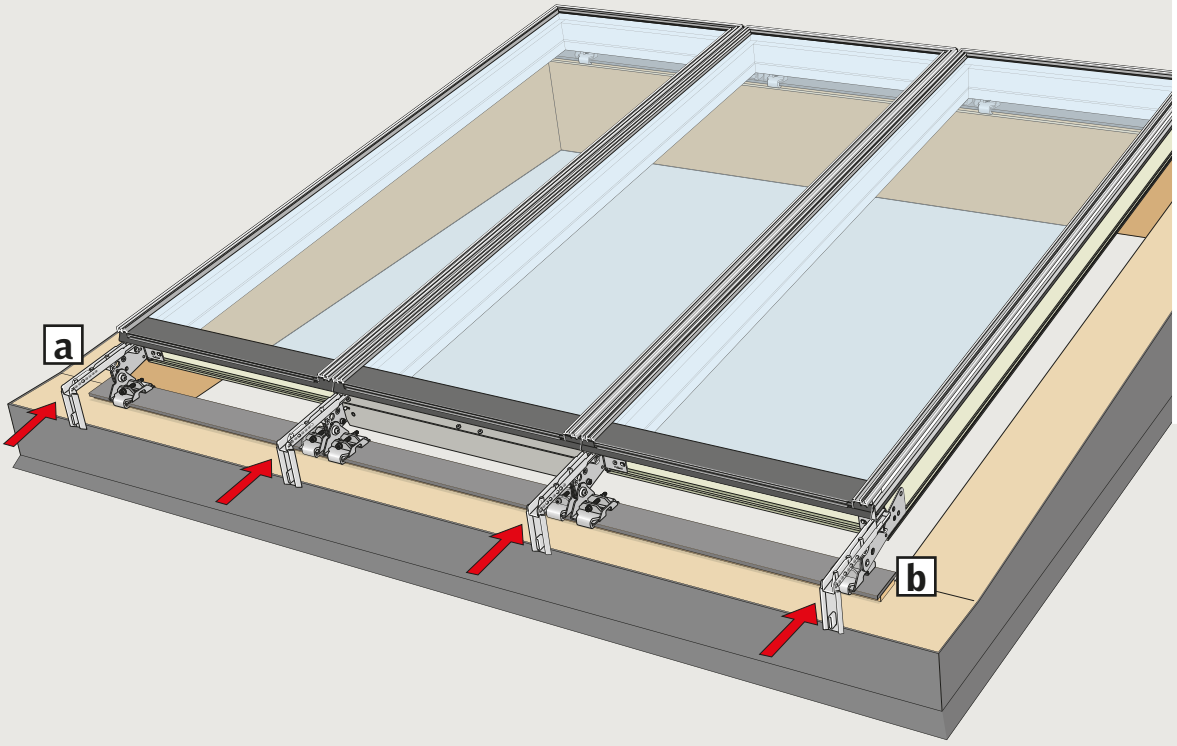

5,5 x 27 mm

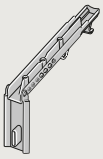

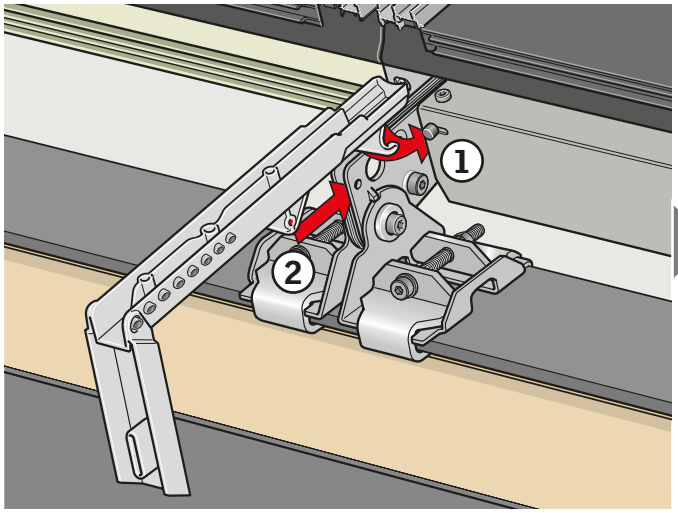

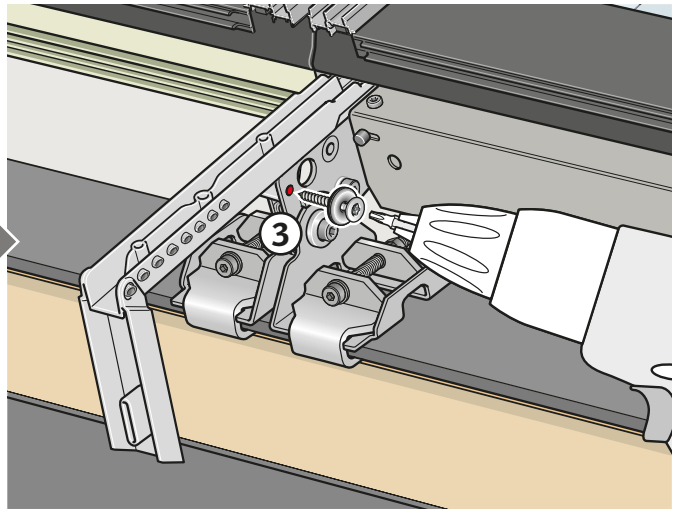

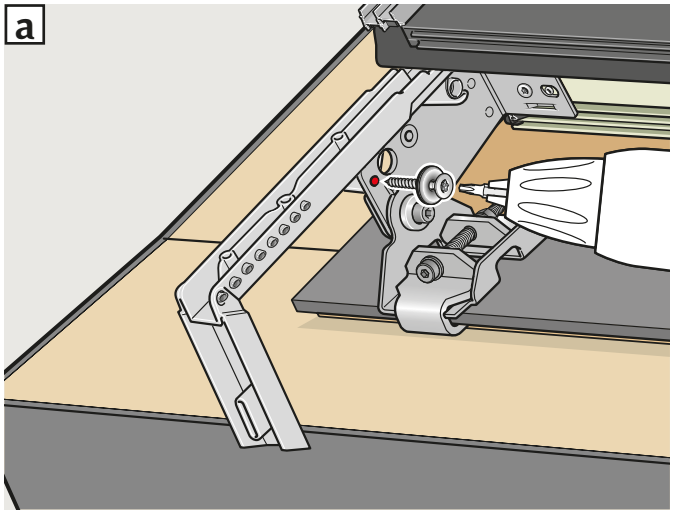

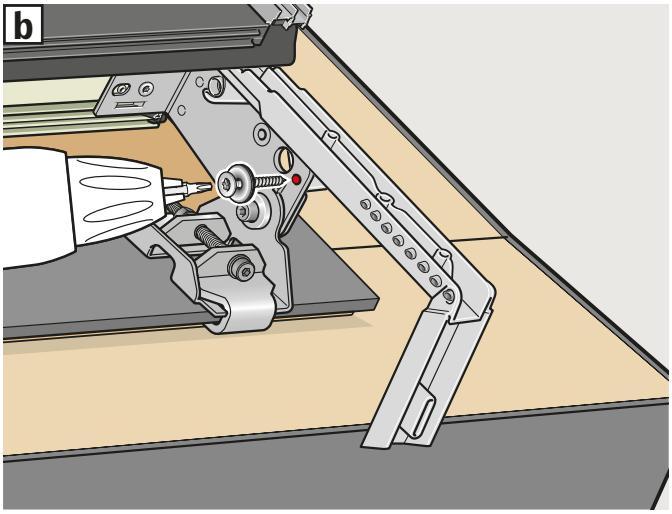

14

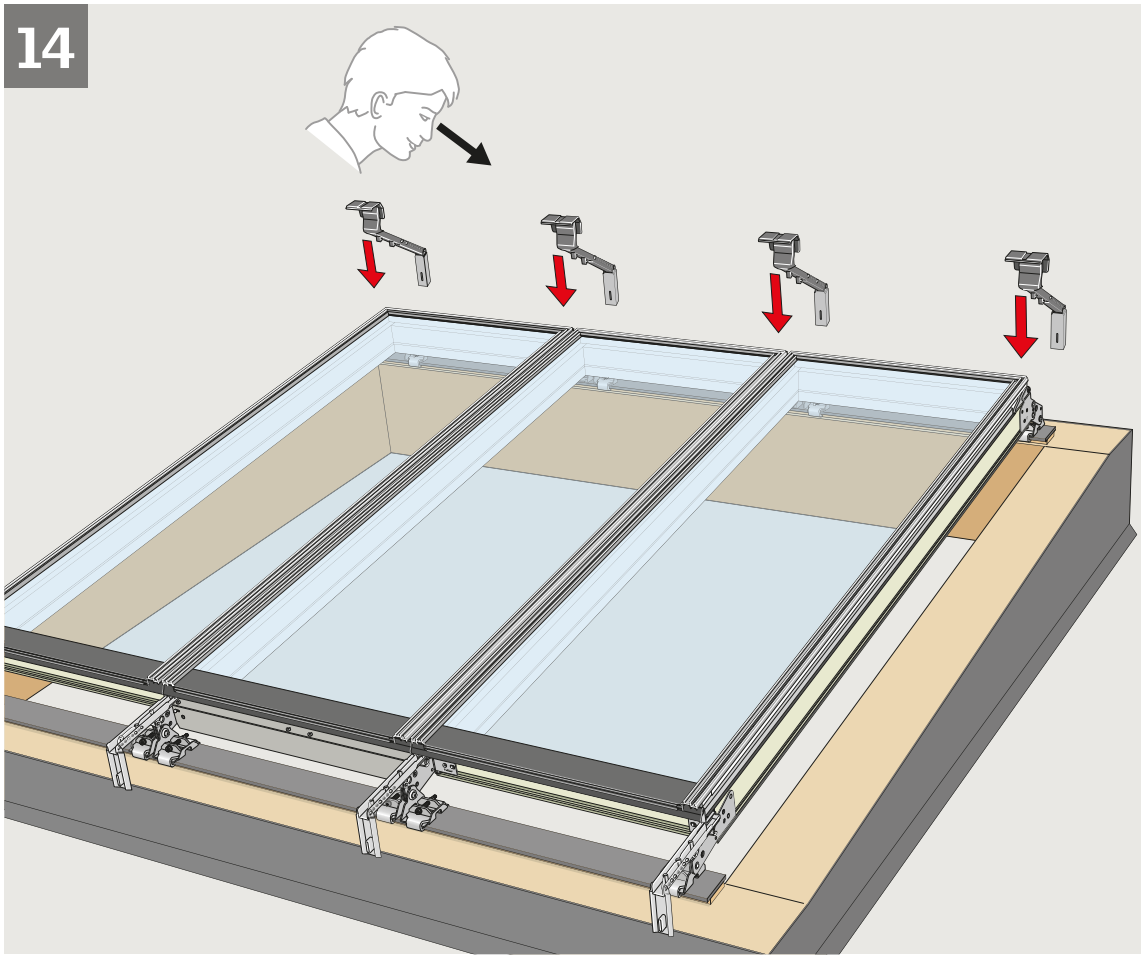

B1-L

B2-L

5,5 x 27 mm

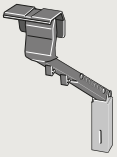

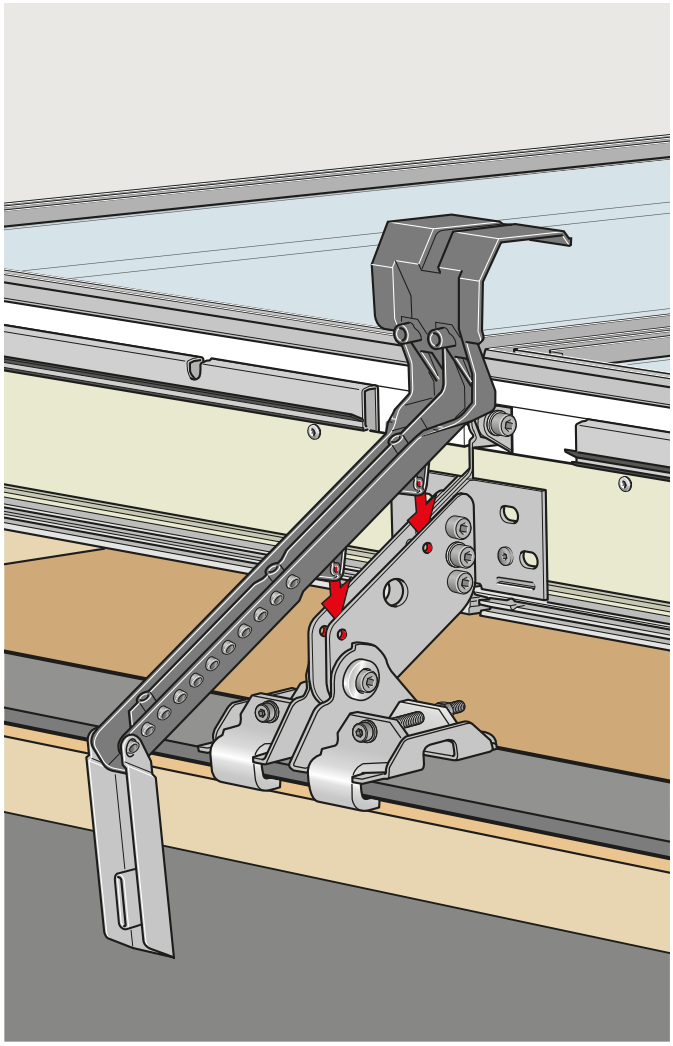

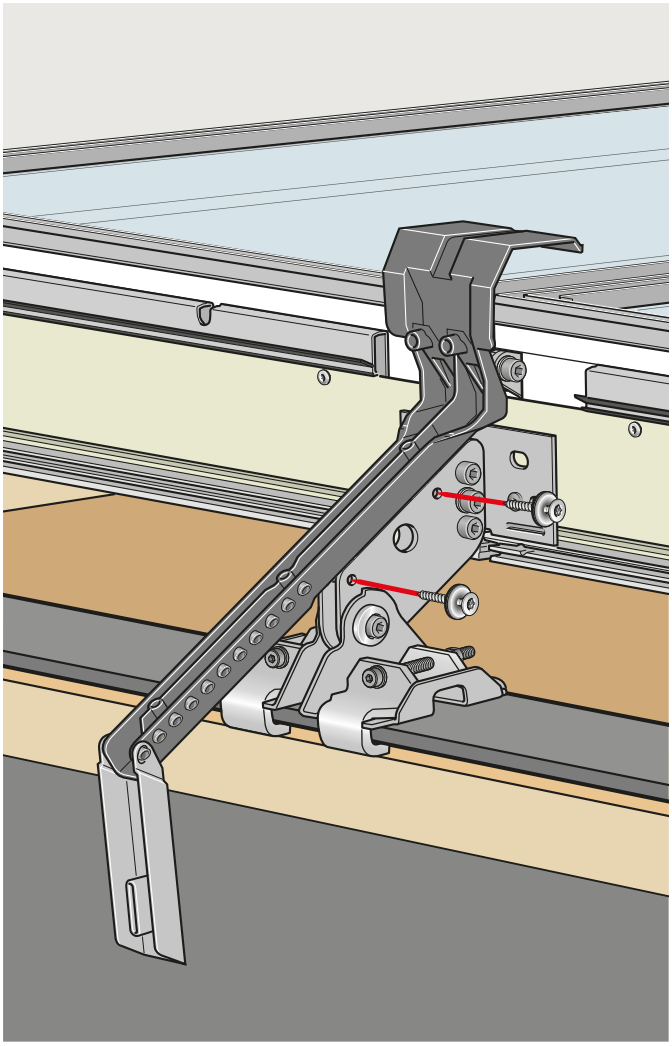

15

B2-L

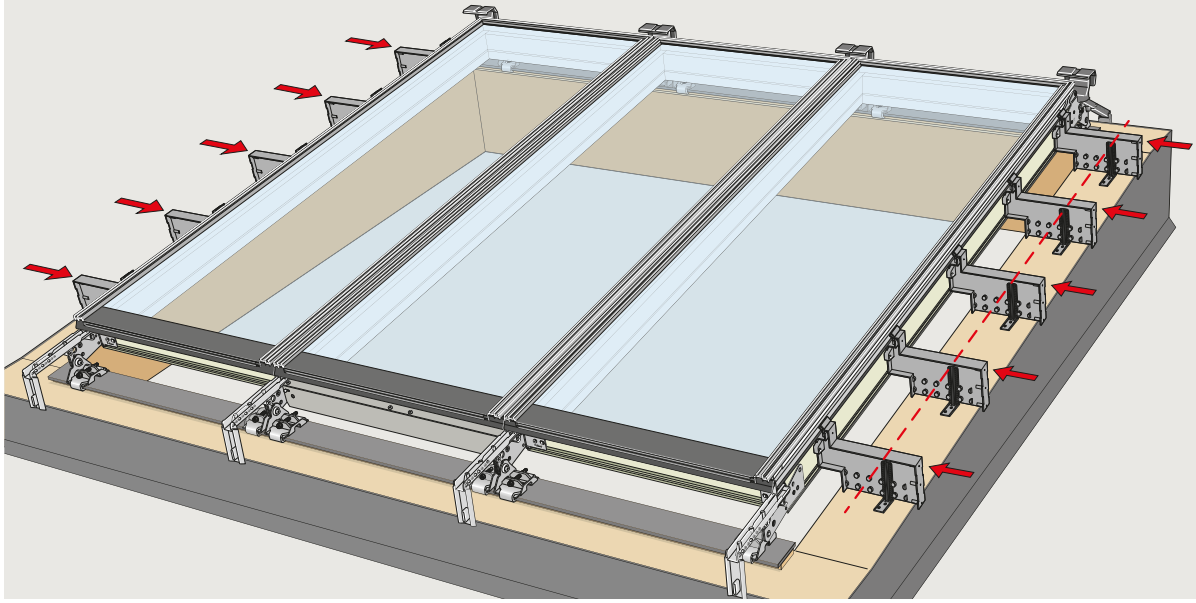

5,5 x 27 mm

4 x 45 mm

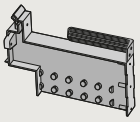

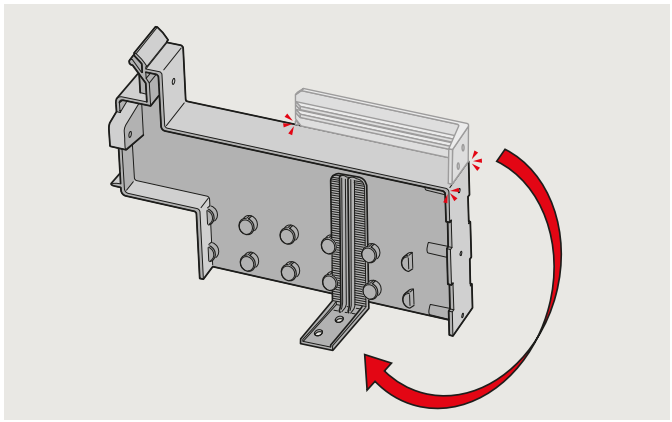

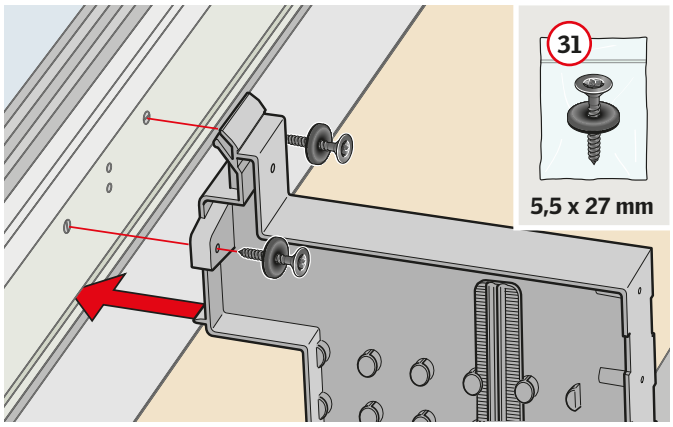

5,5 x 27 mm

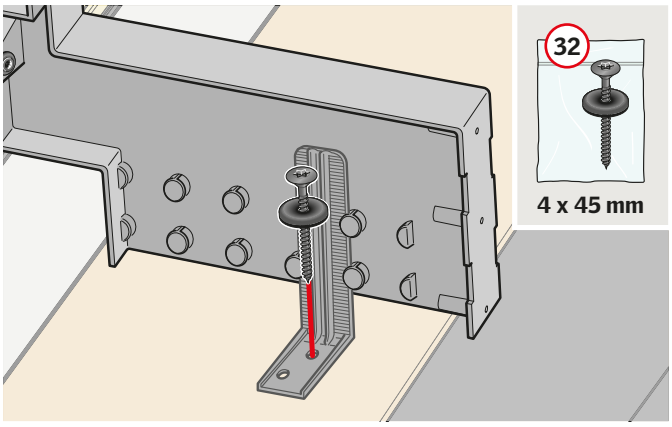

4 x 45 mm

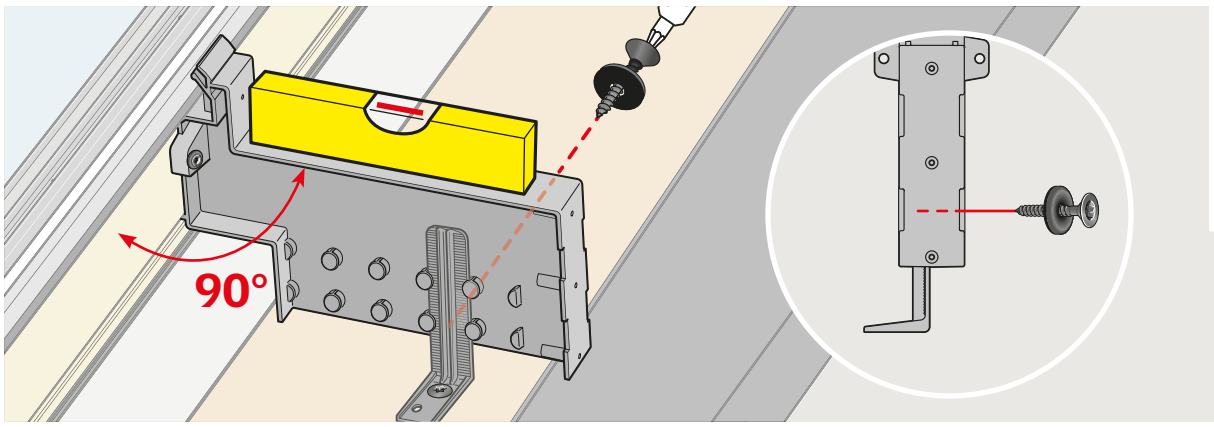

5,5 x 27 mm

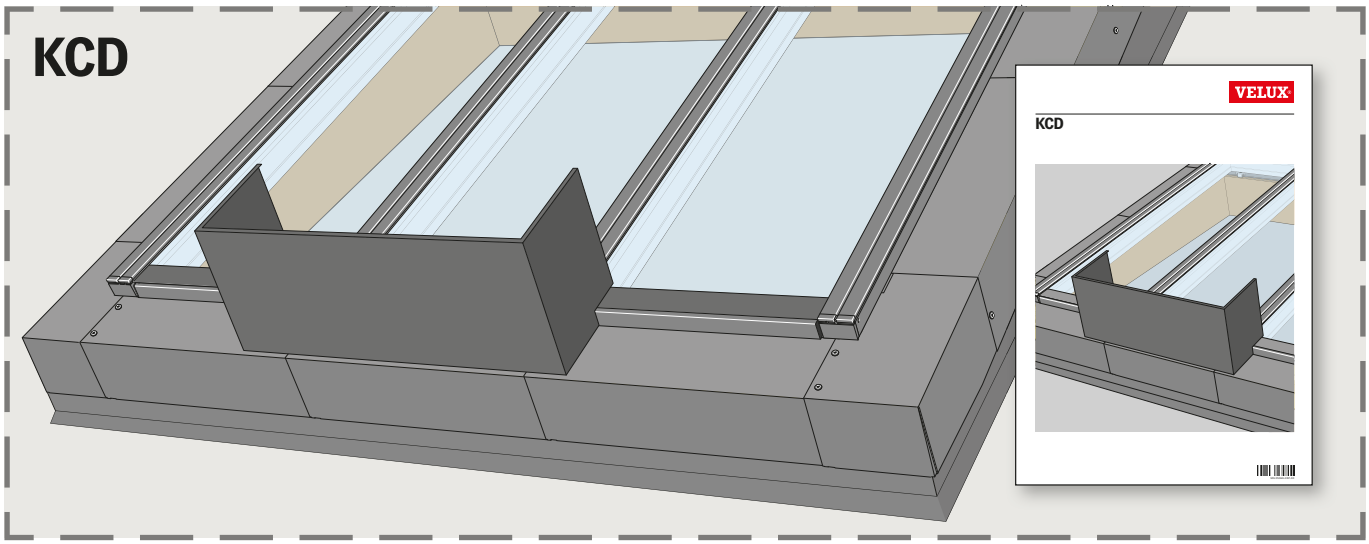
KCD
VELUX
KCD

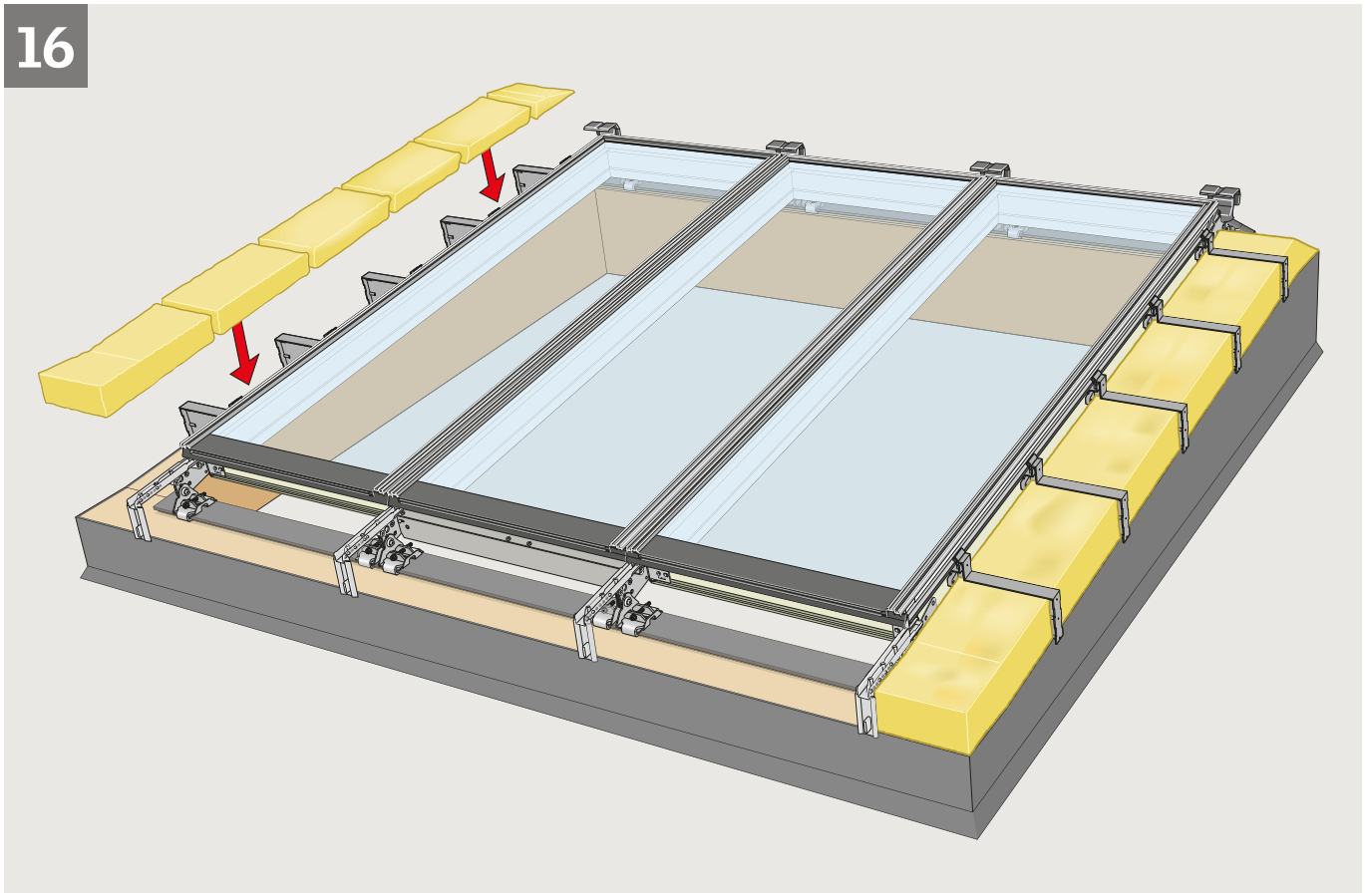
16

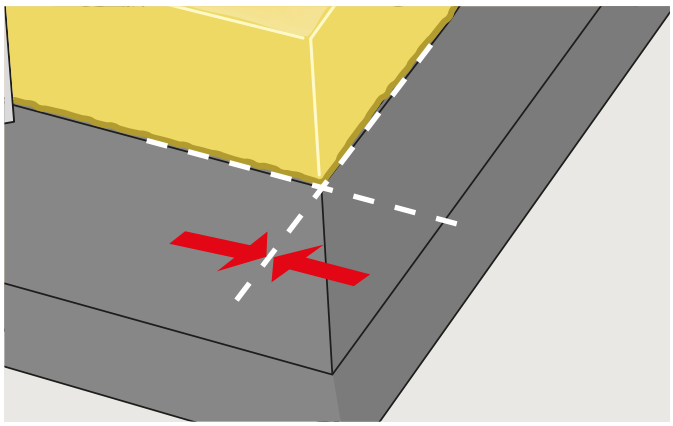

17

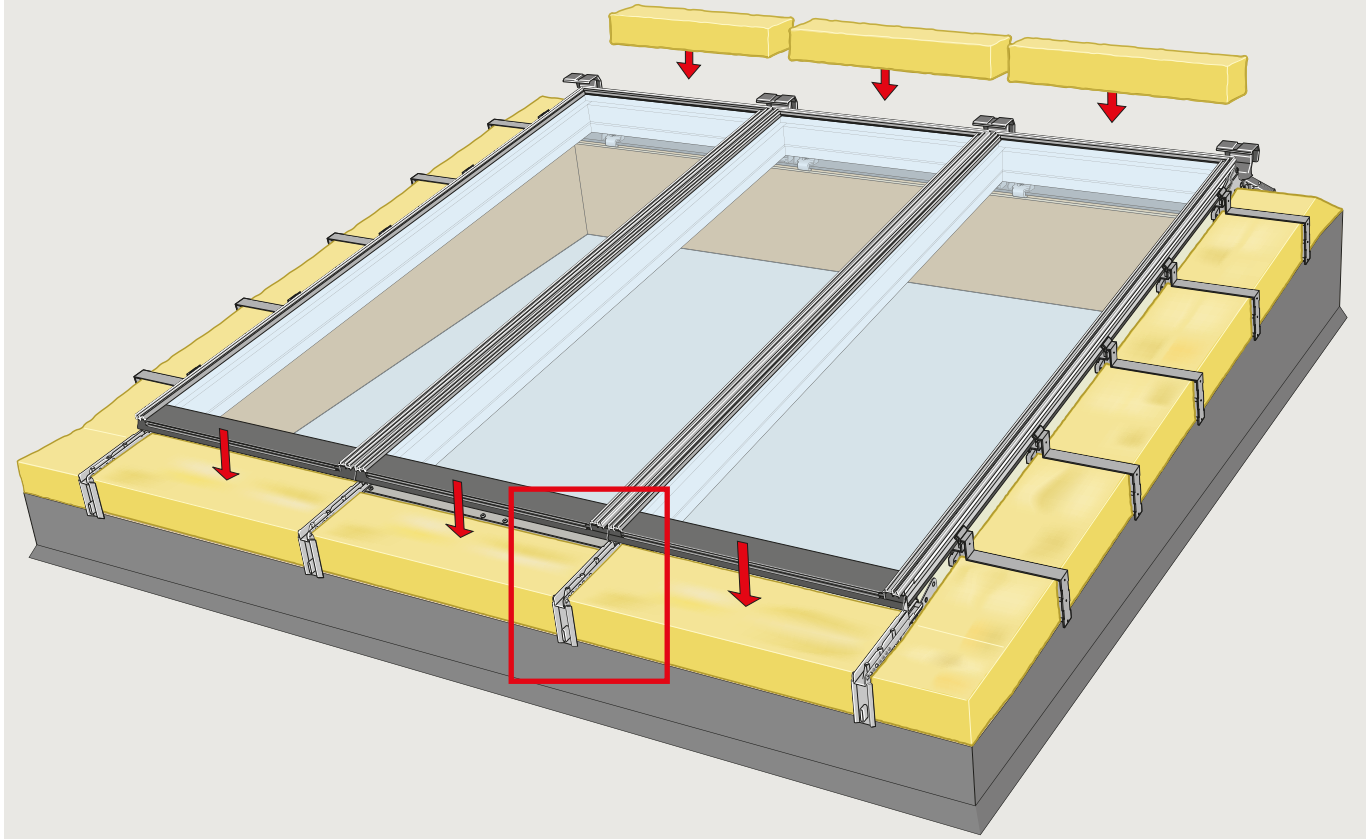

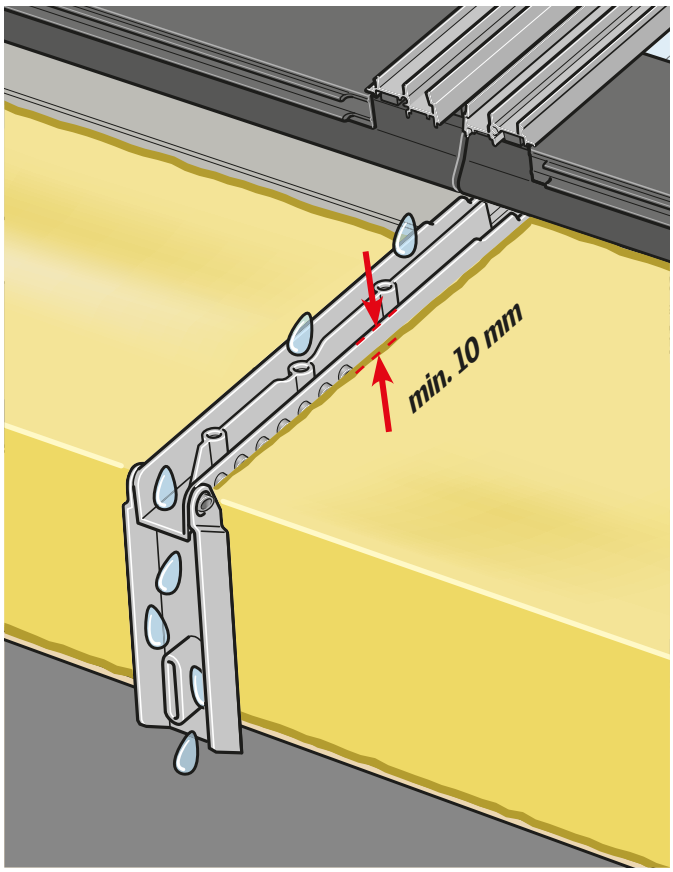

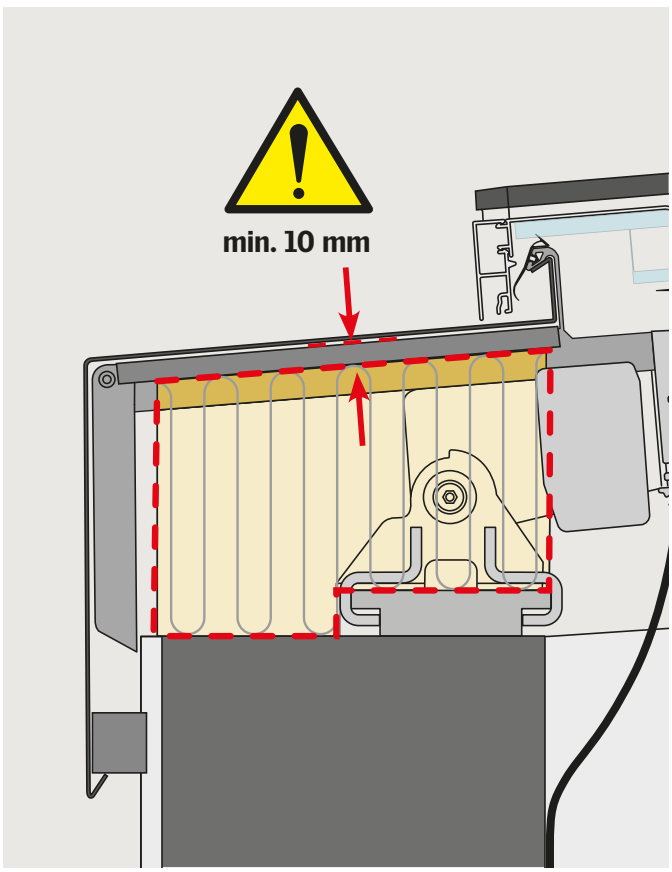

18

C3-L

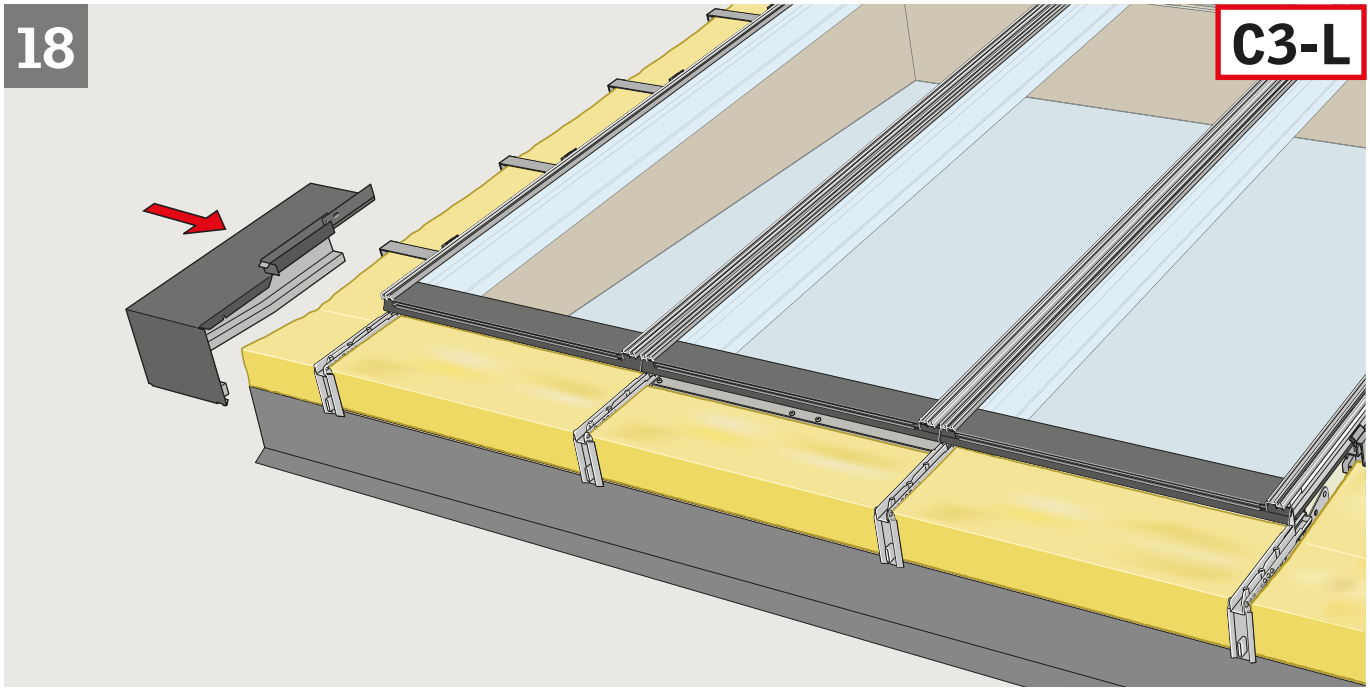

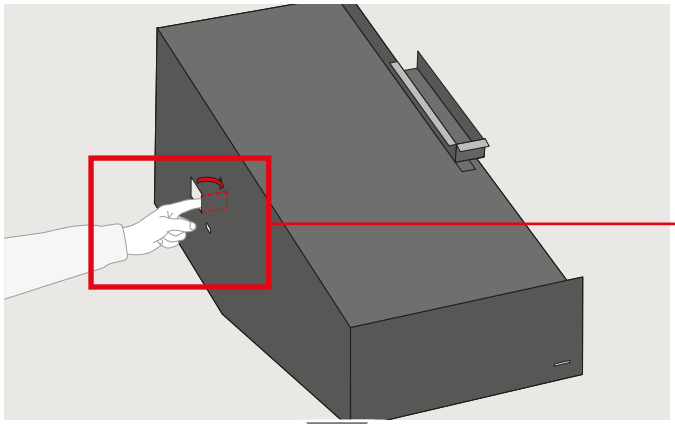

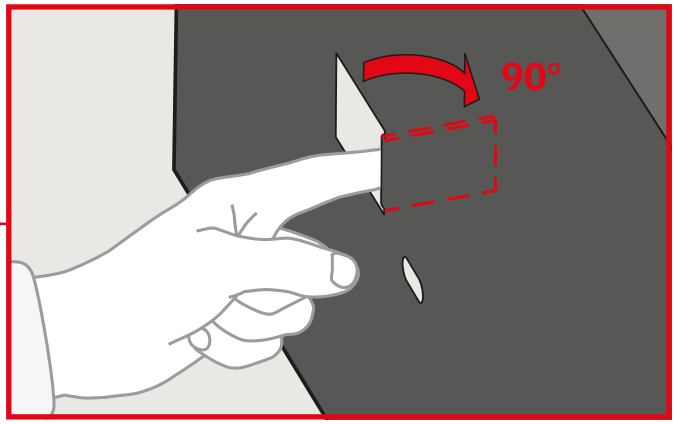

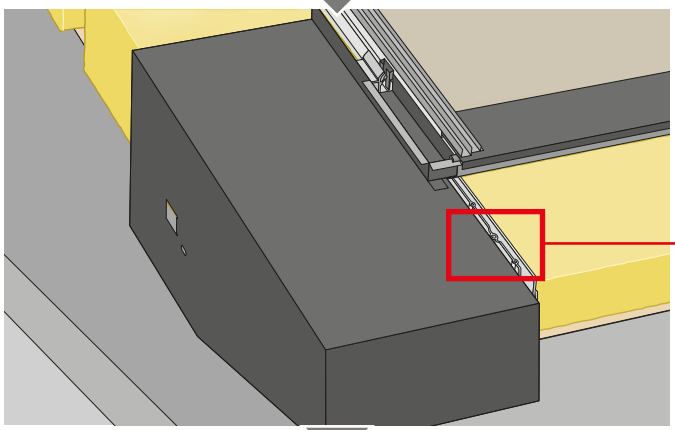

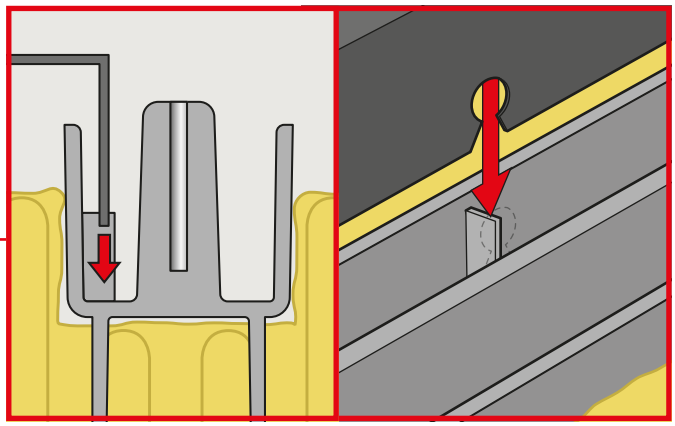

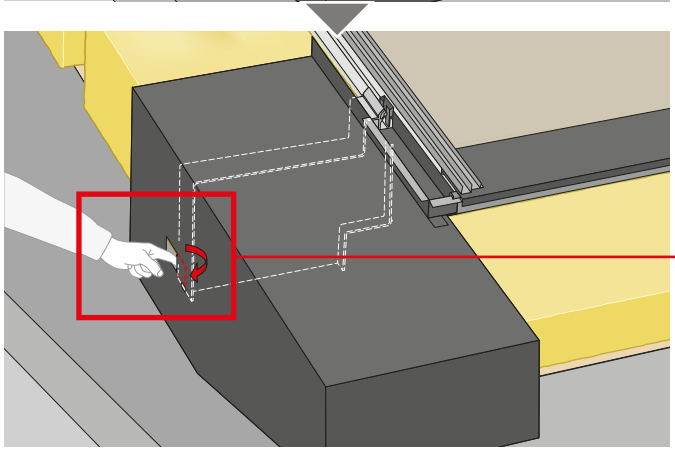

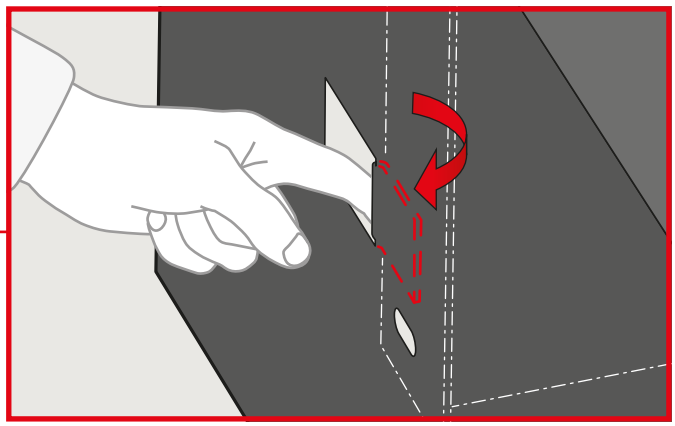

19

C1-L B1-L

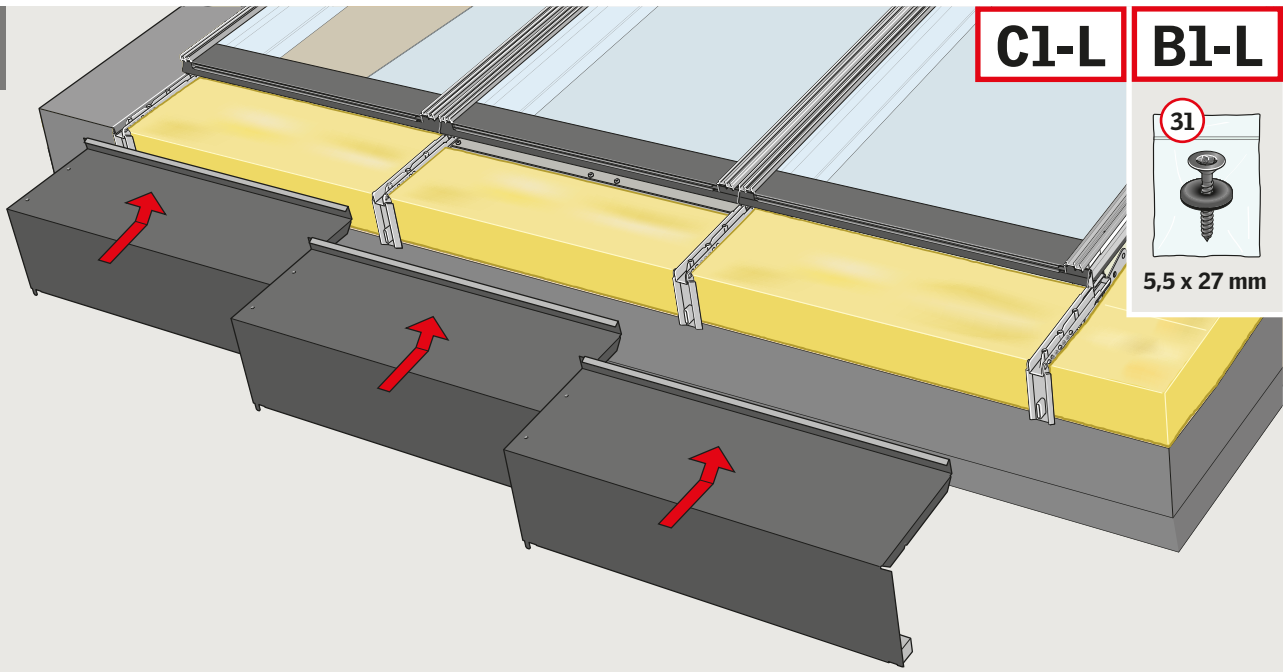

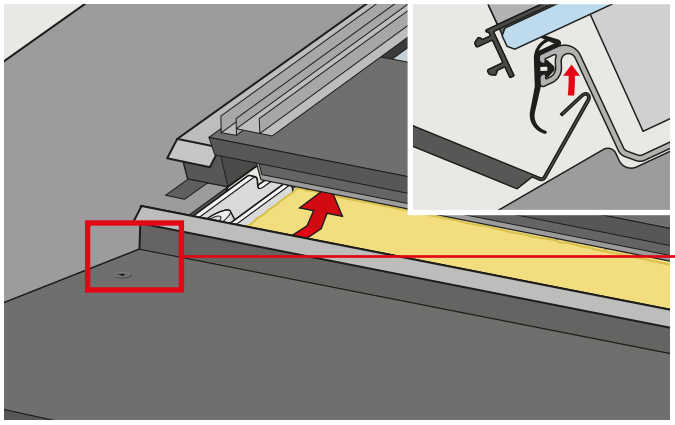

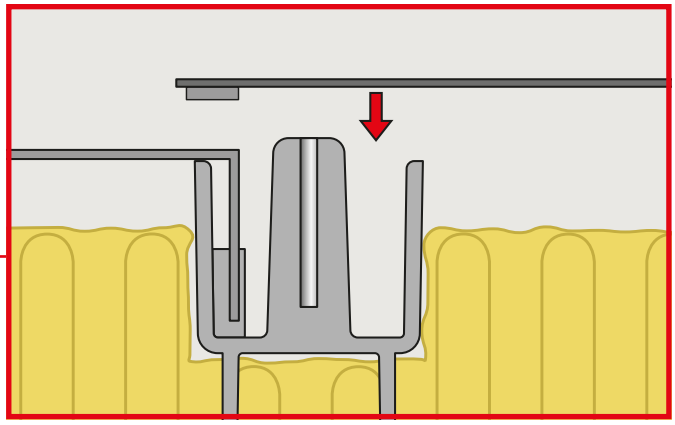

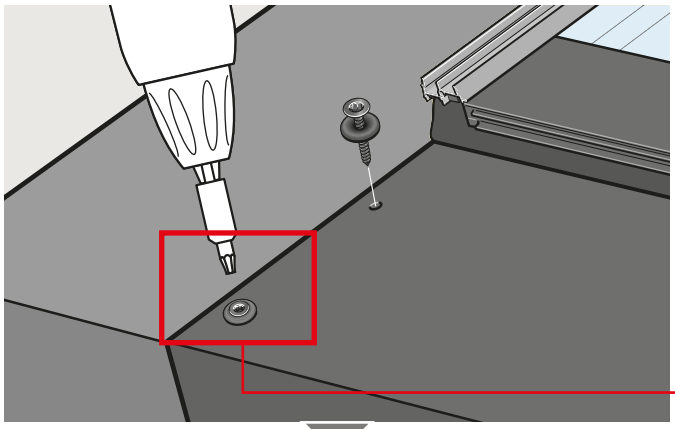

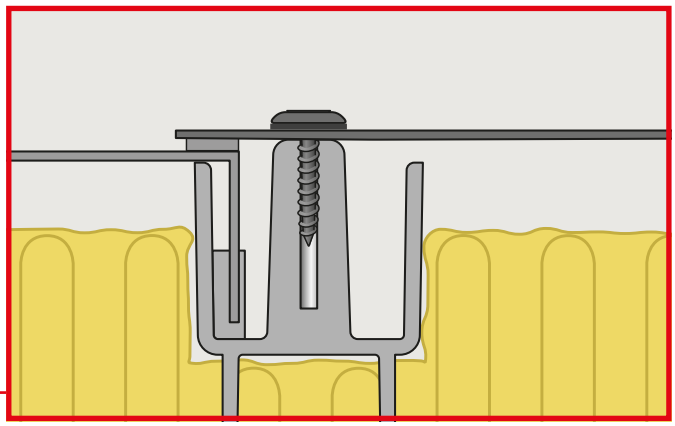

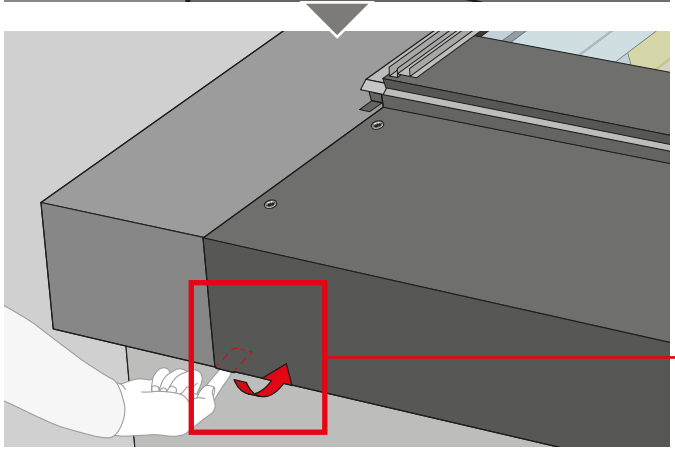

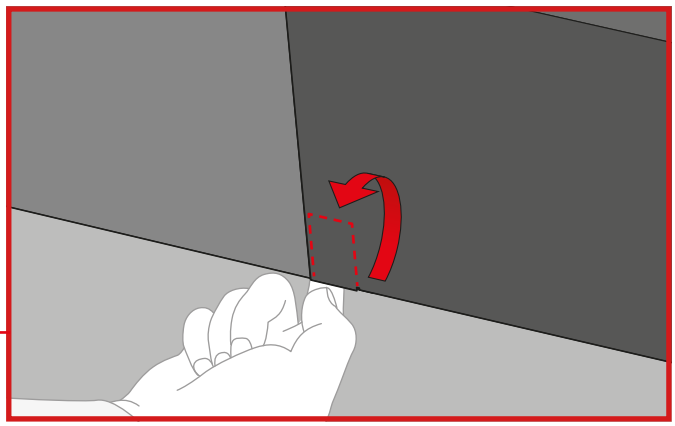

20

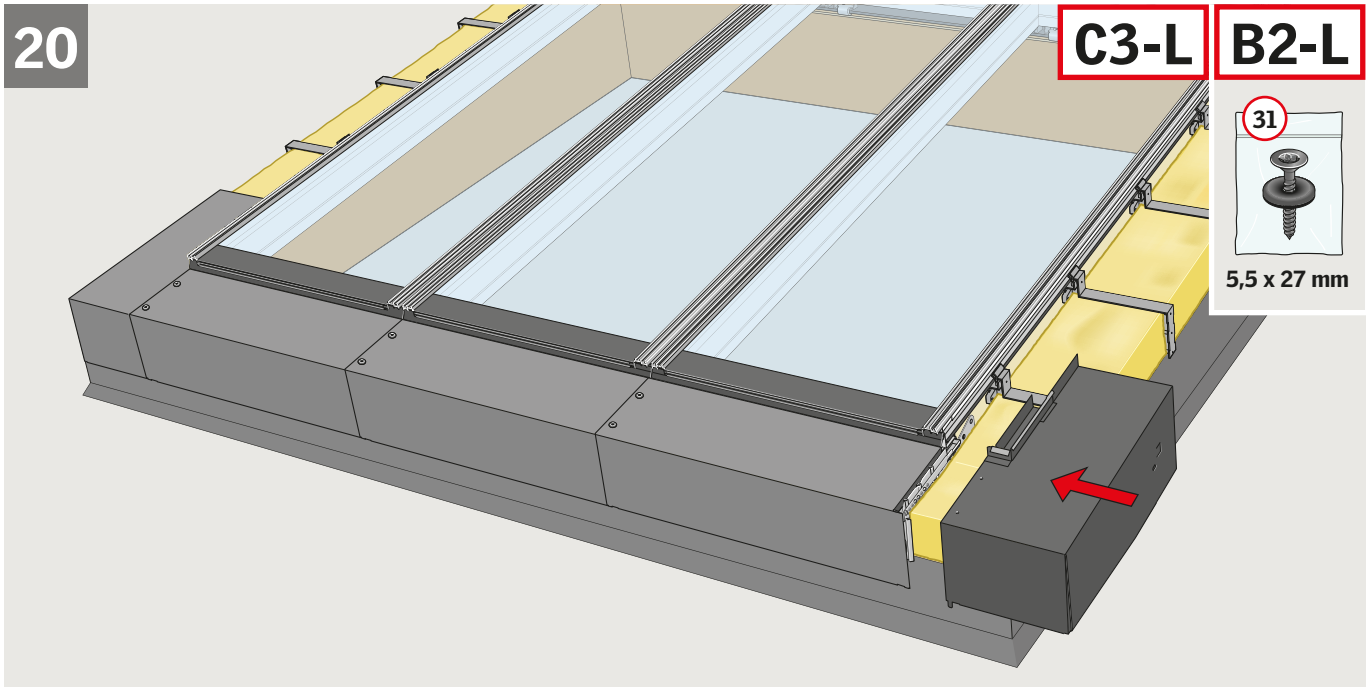

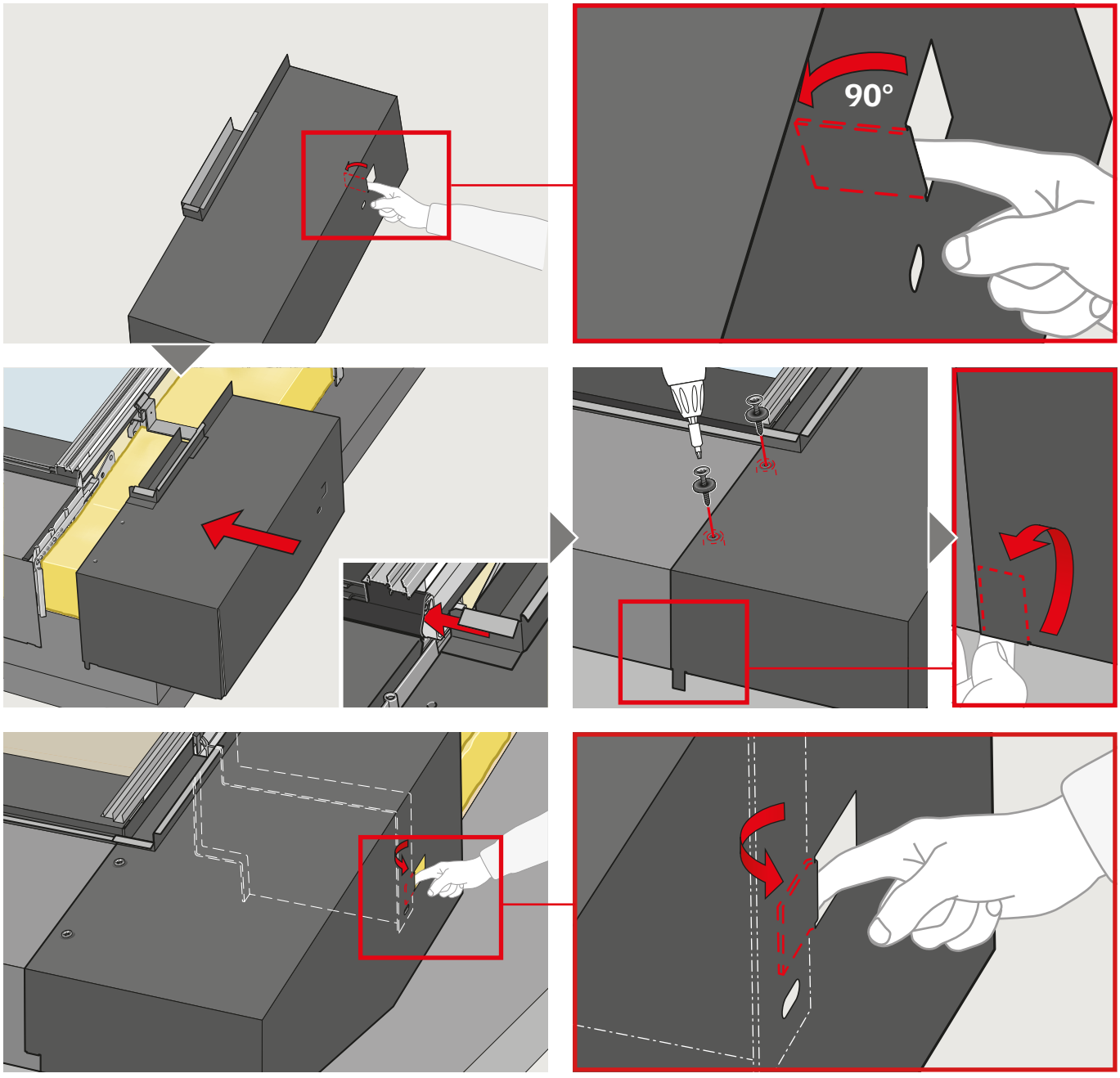

21

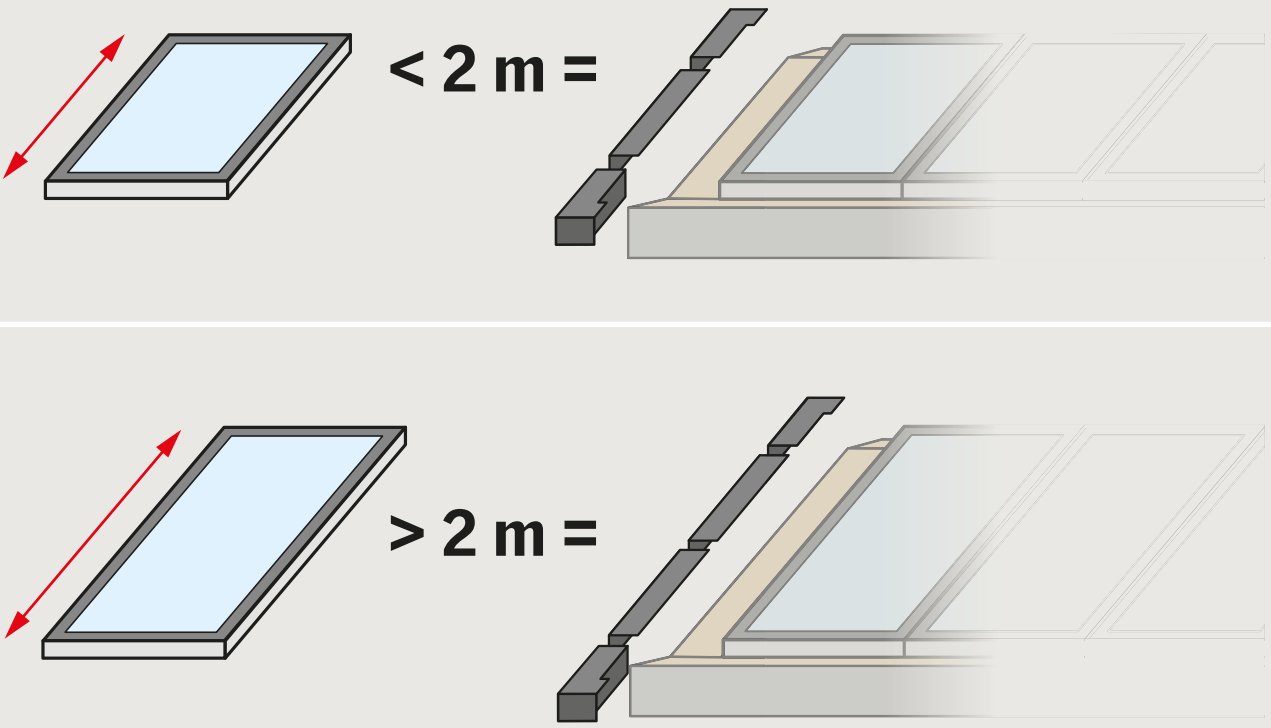

22

C3-L B2-L

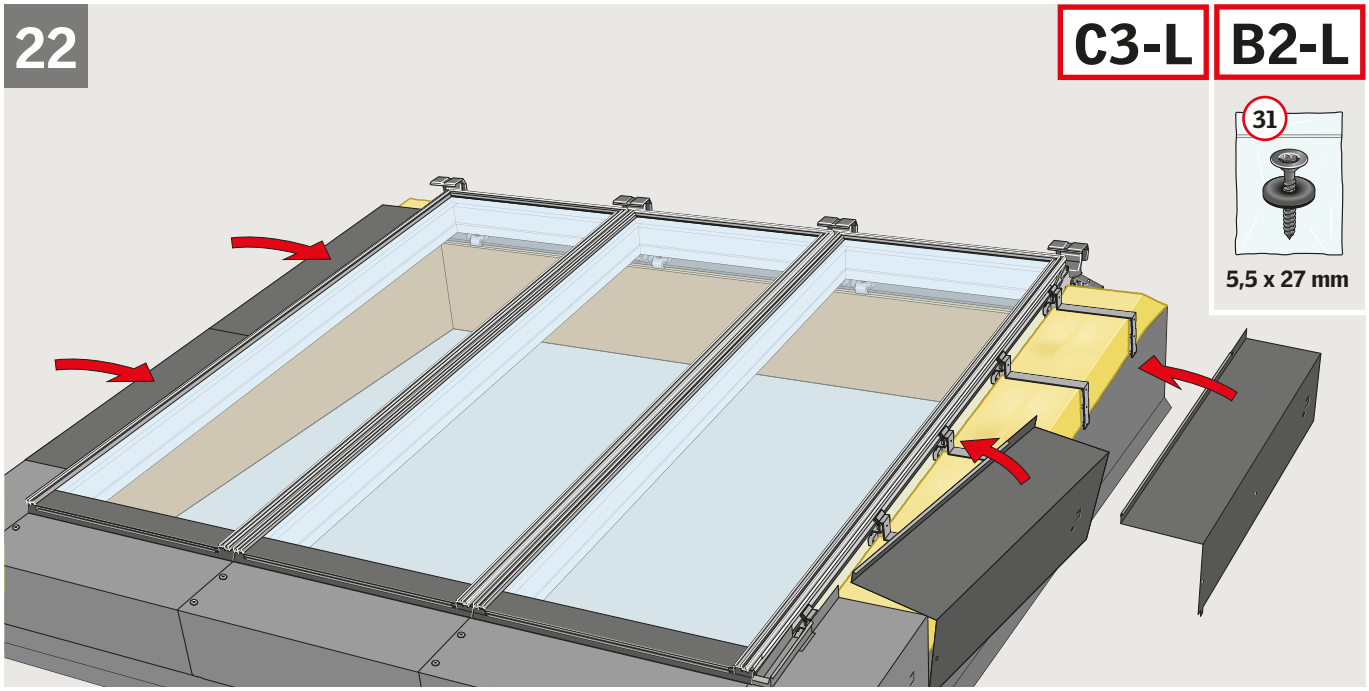

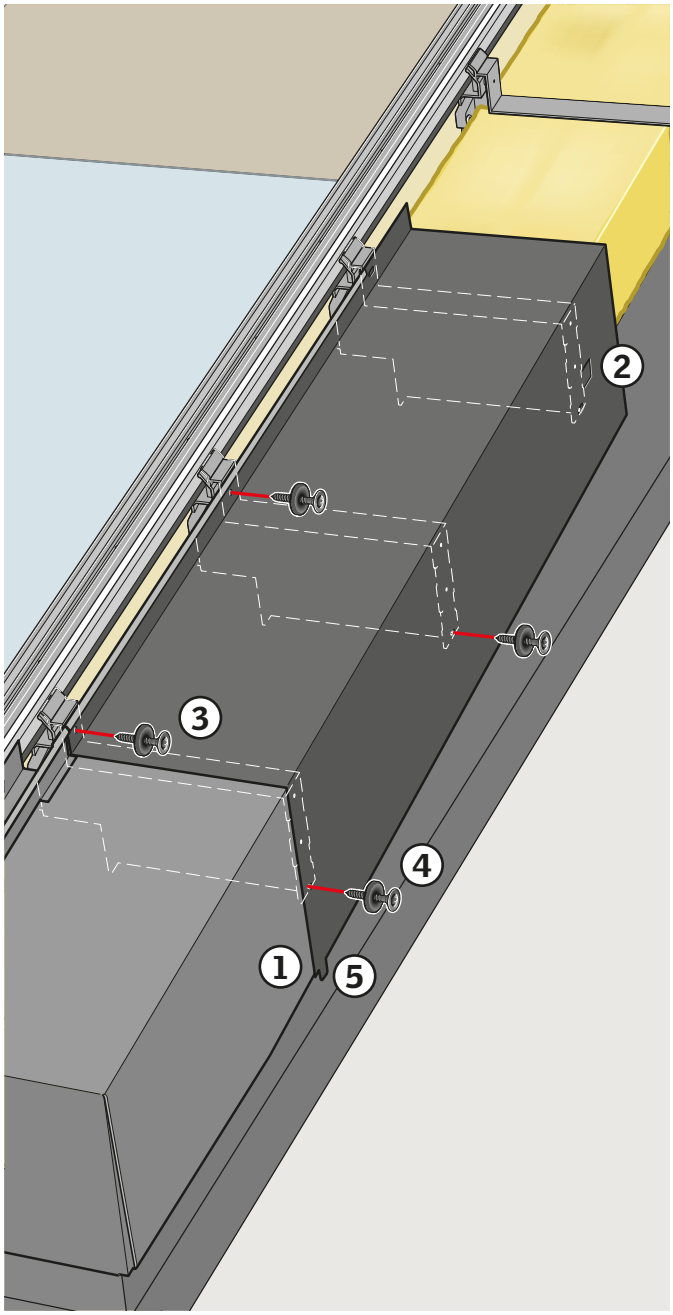

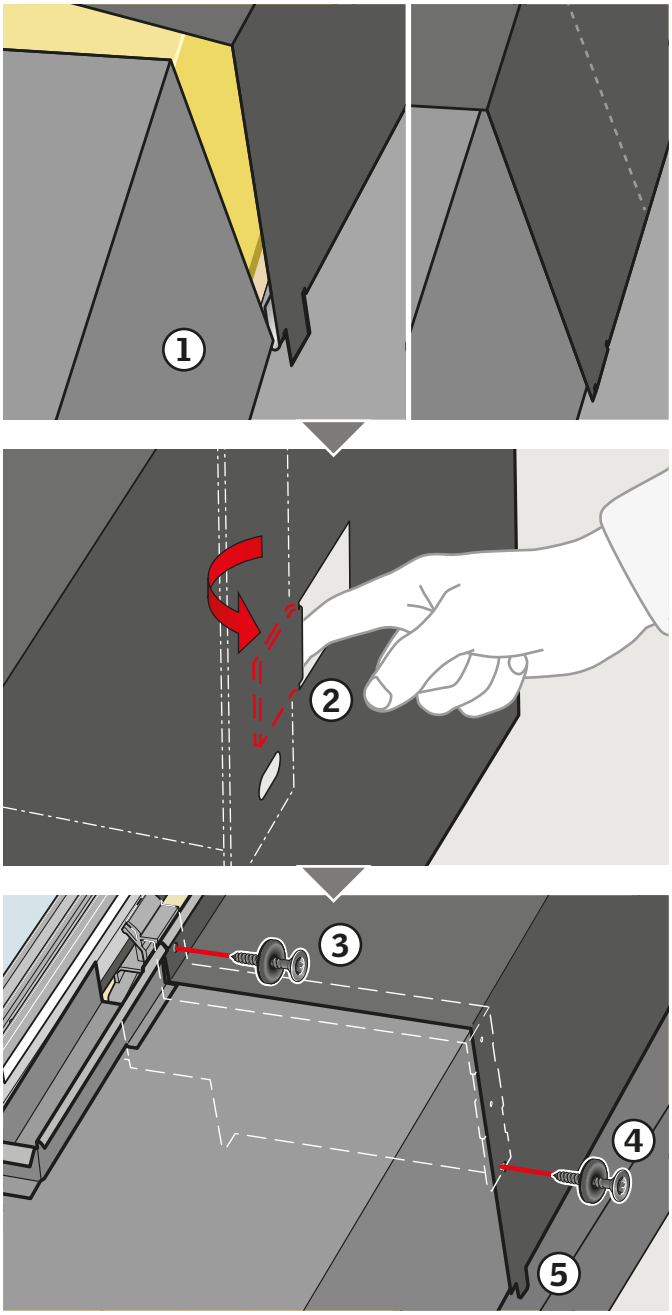

23

C3-L B2-L

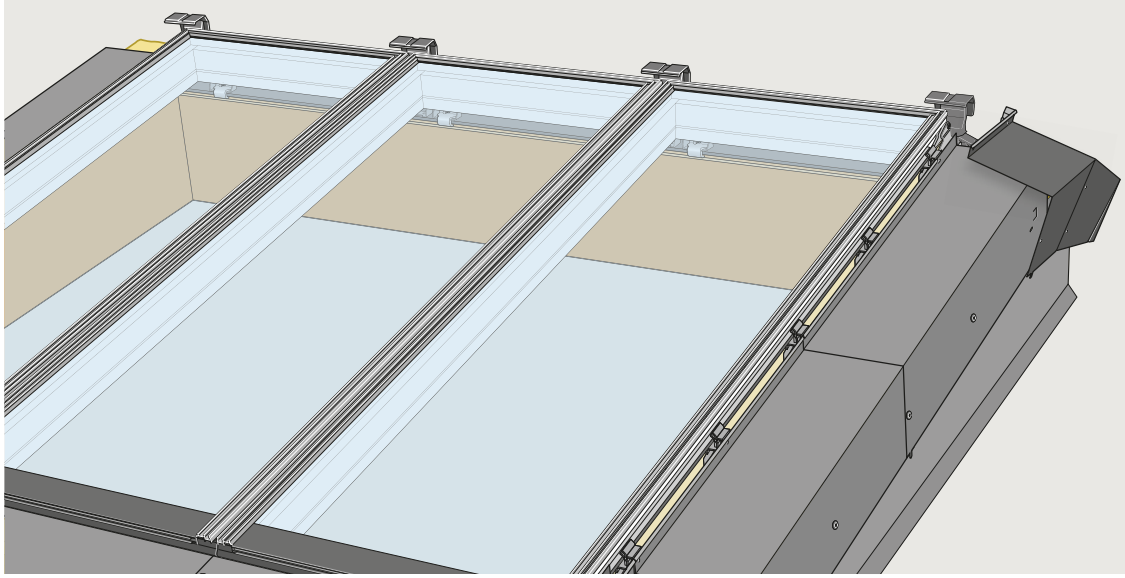

5,5 x 27 mm

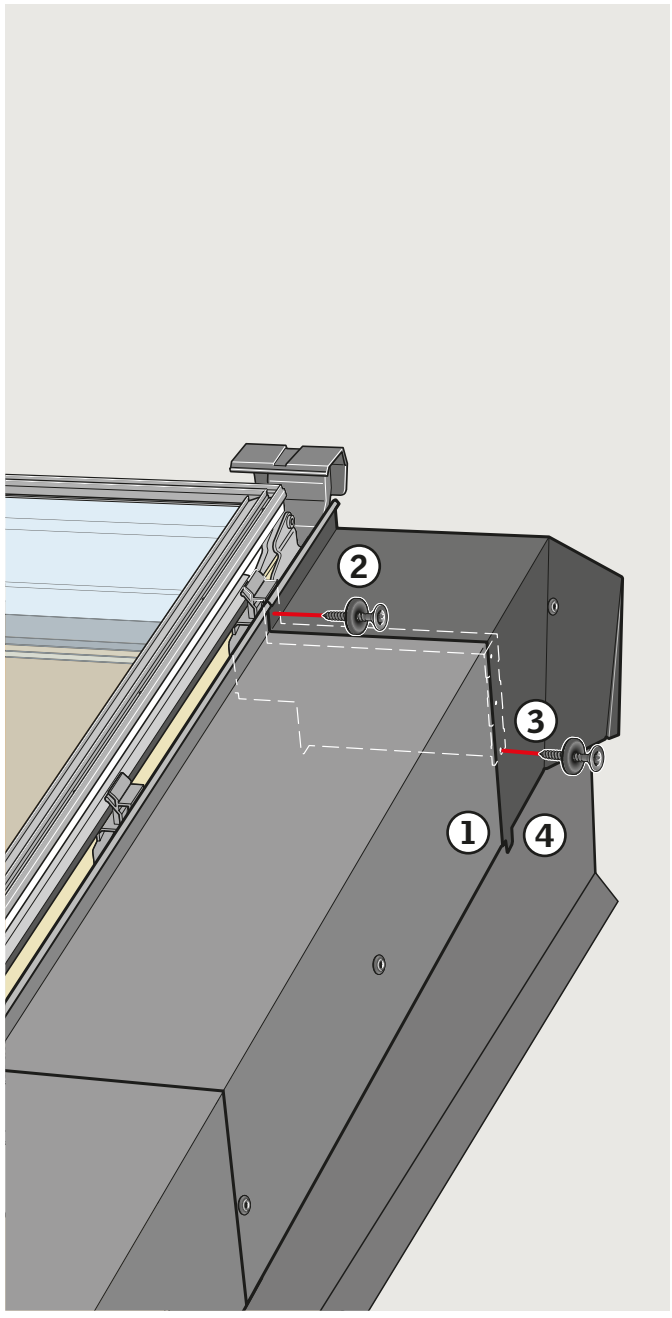

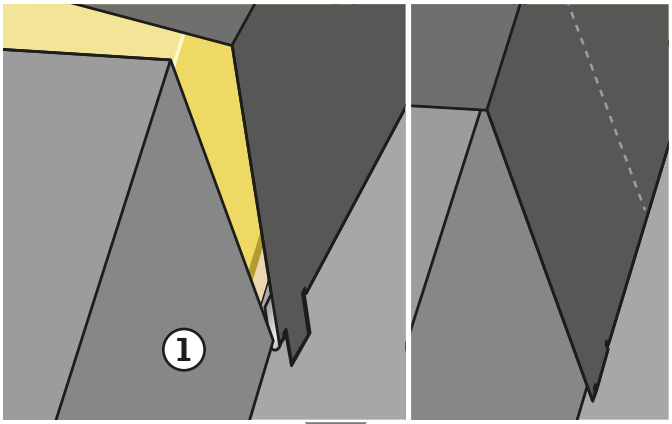

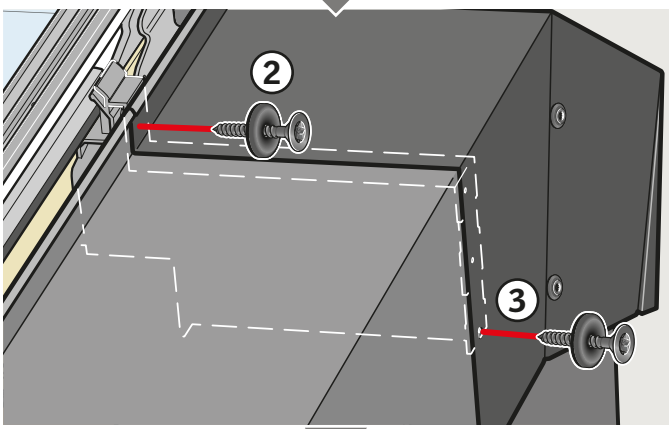

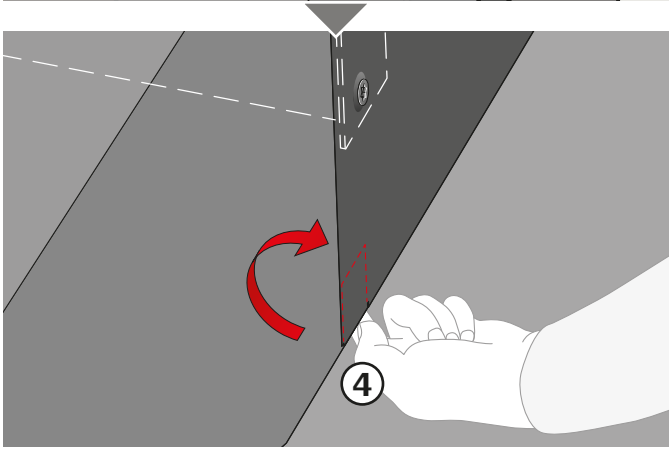

24

C2-L B1-L

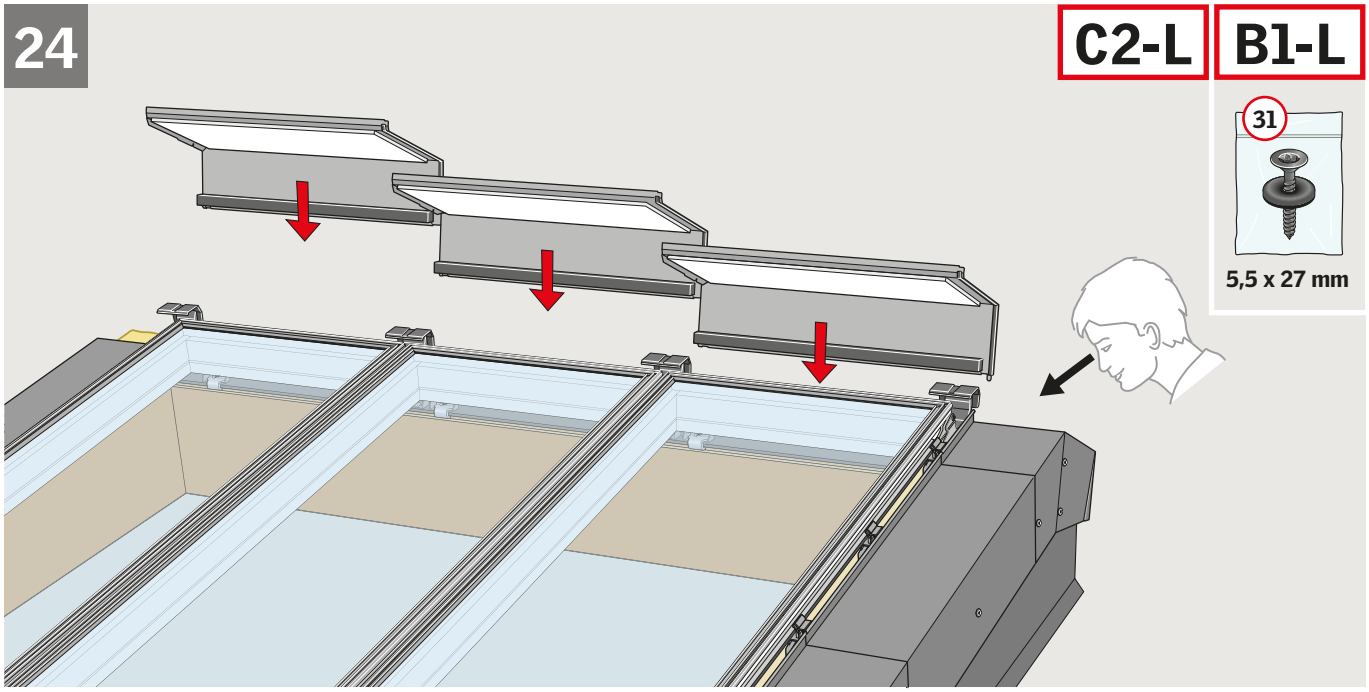

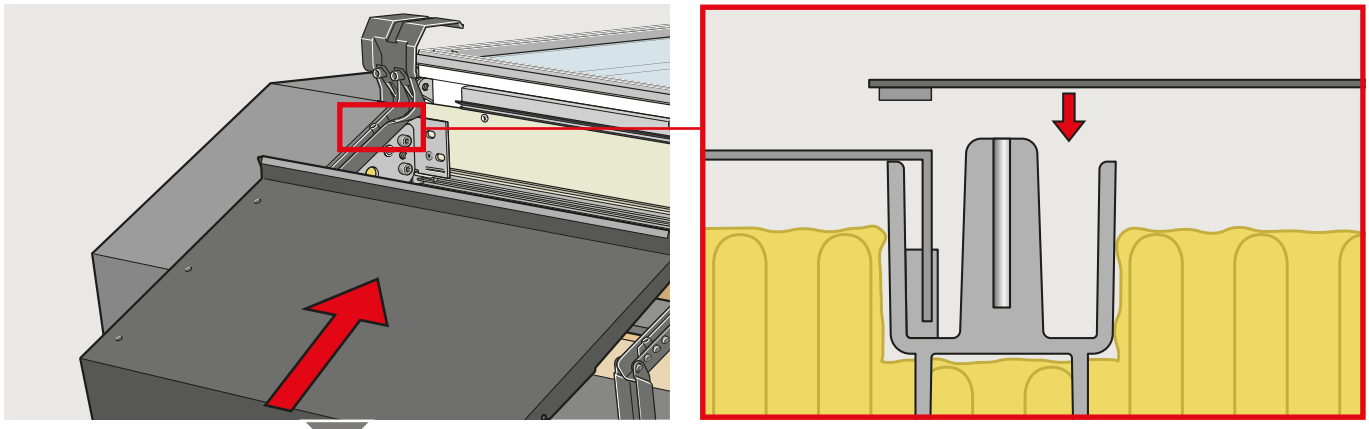

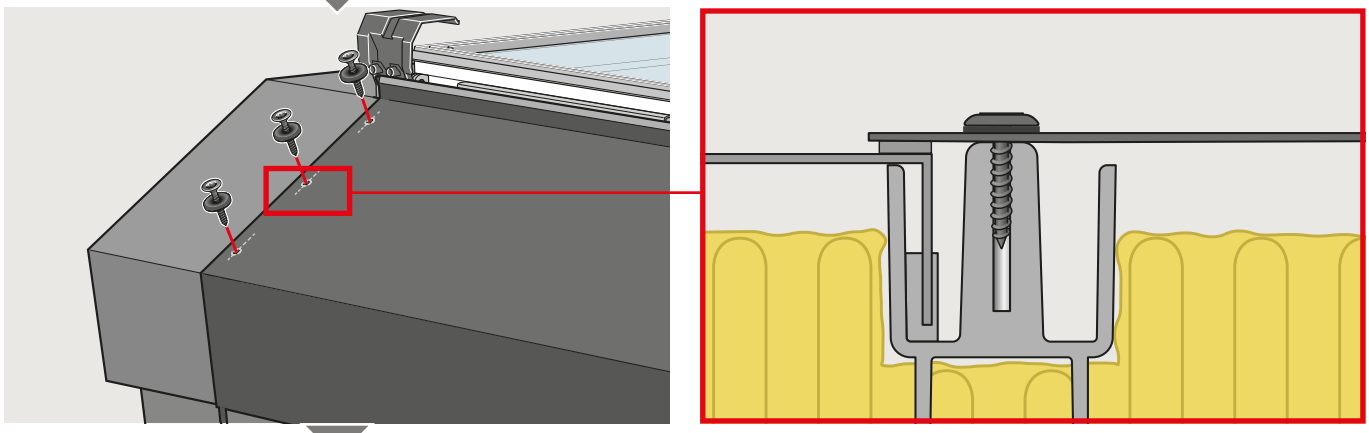

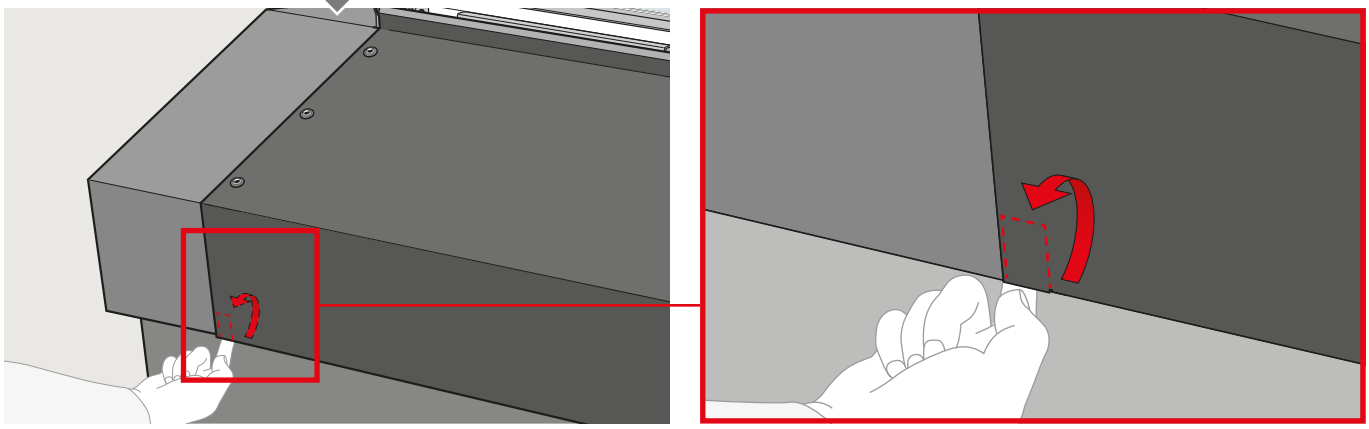

25

C3-L B2-L

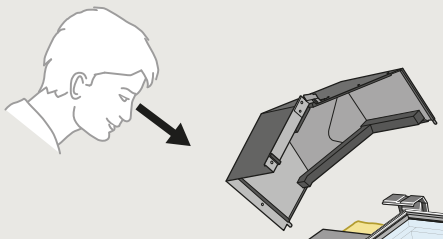

31

5,5 x 27 mm

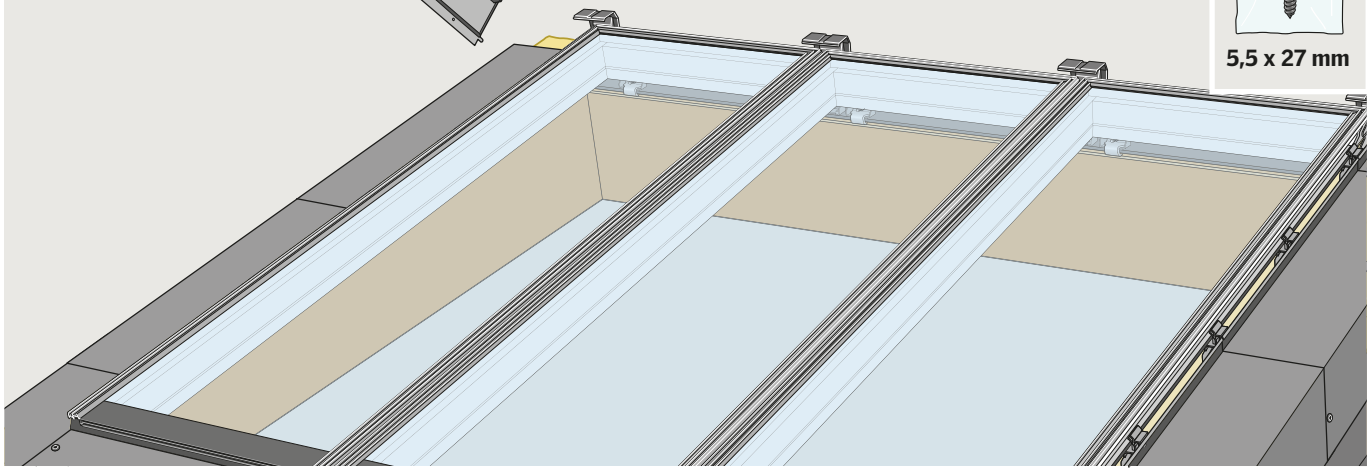

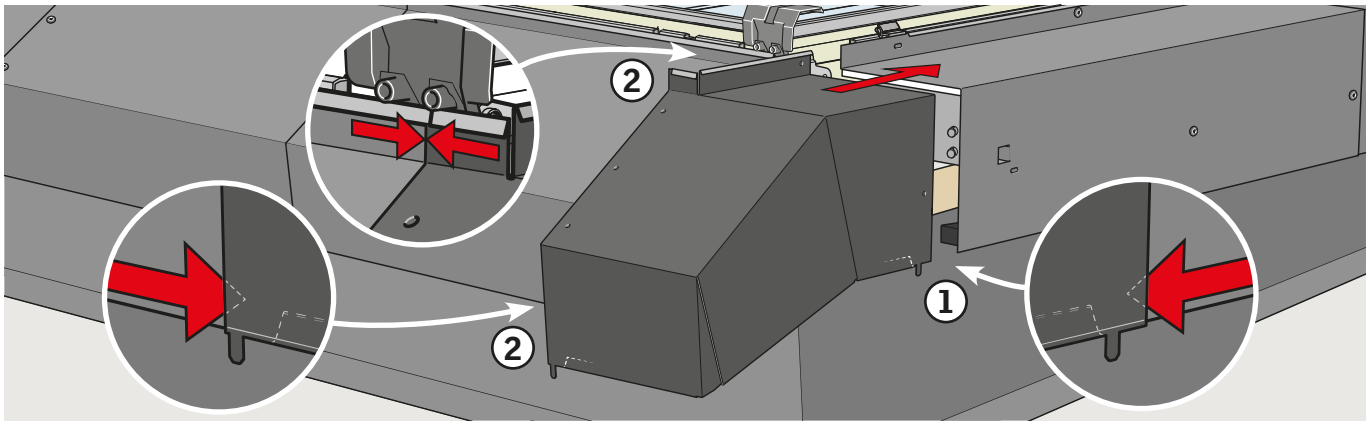

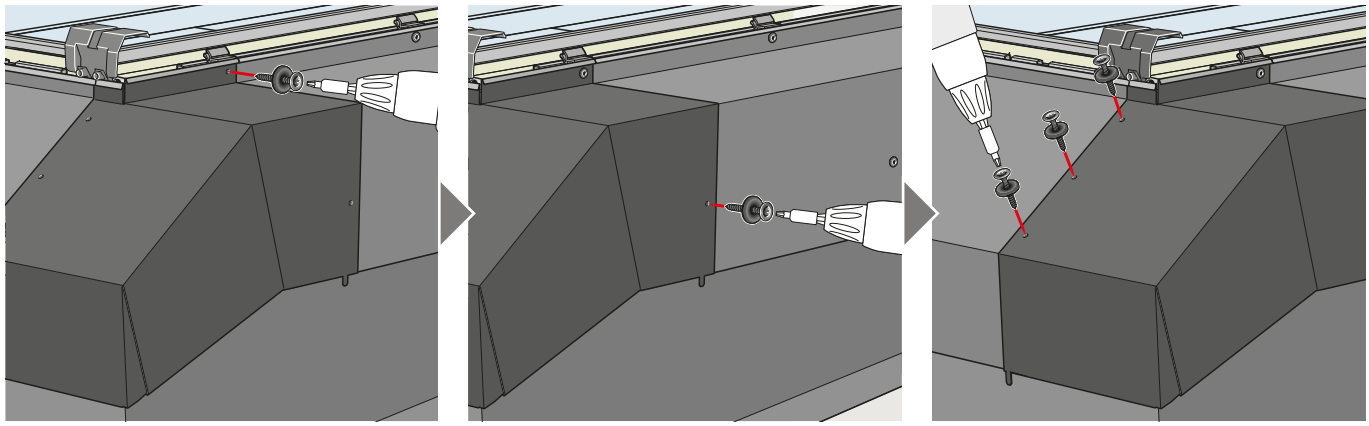

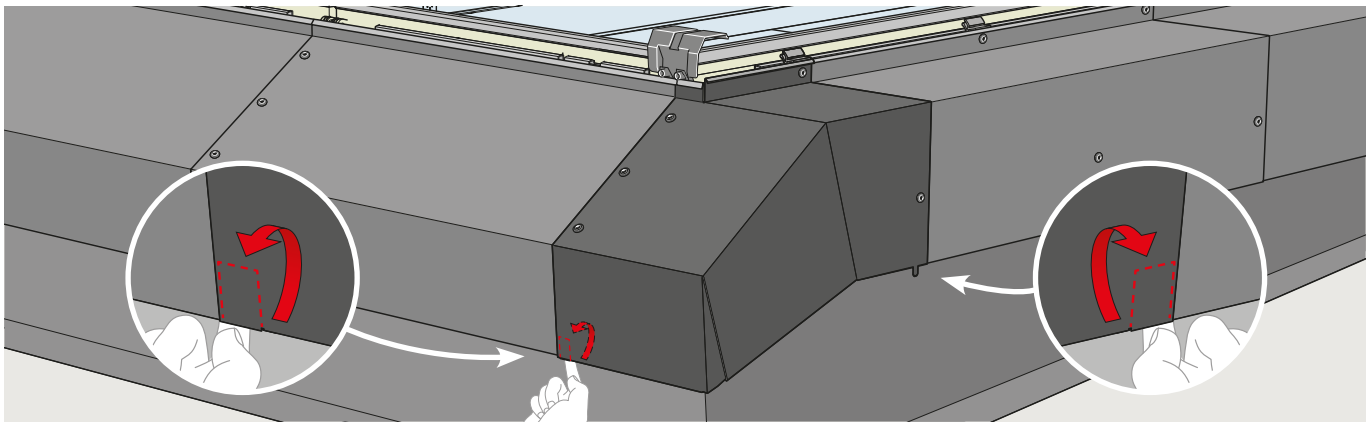

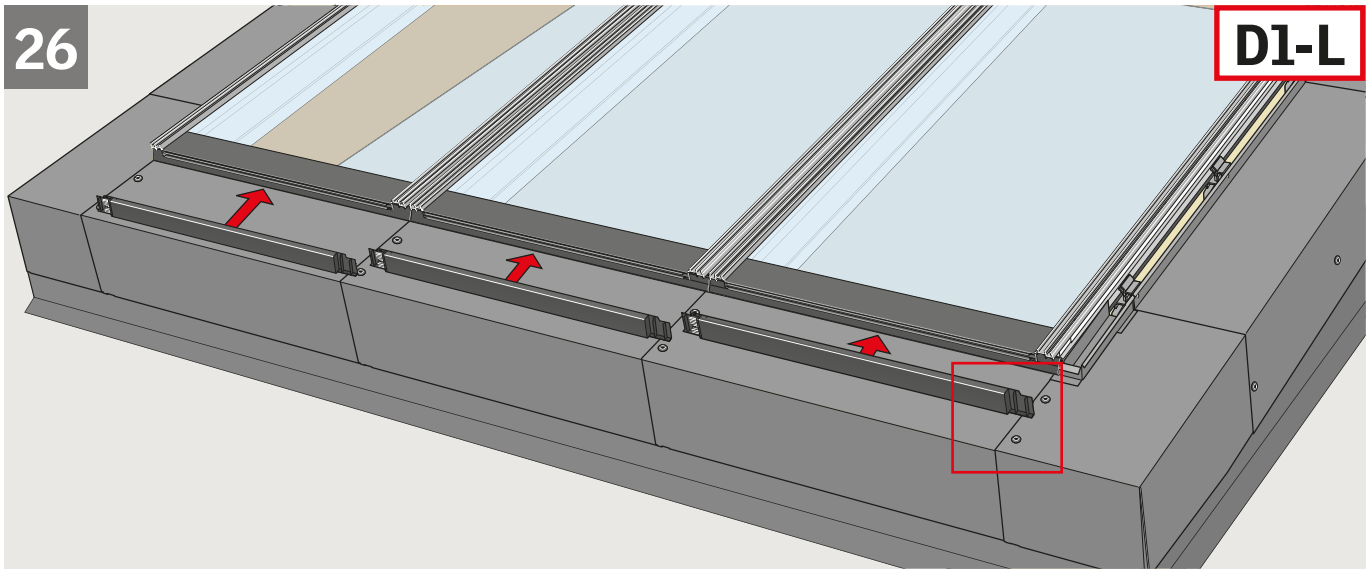
26
D1-L

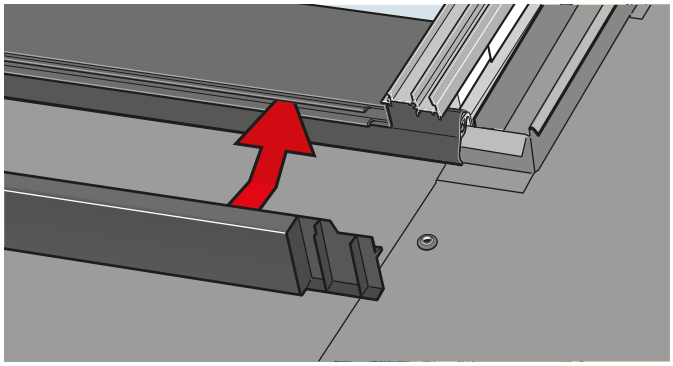

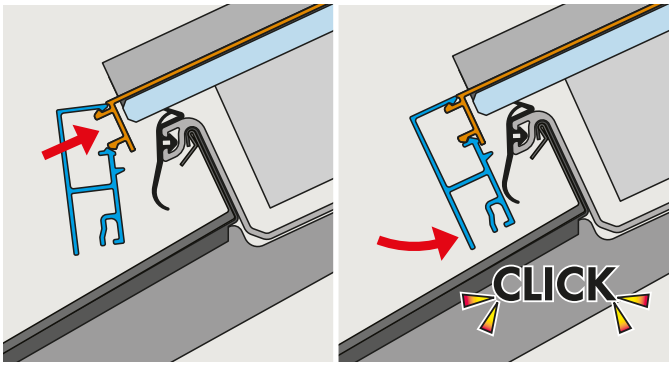
CLICK

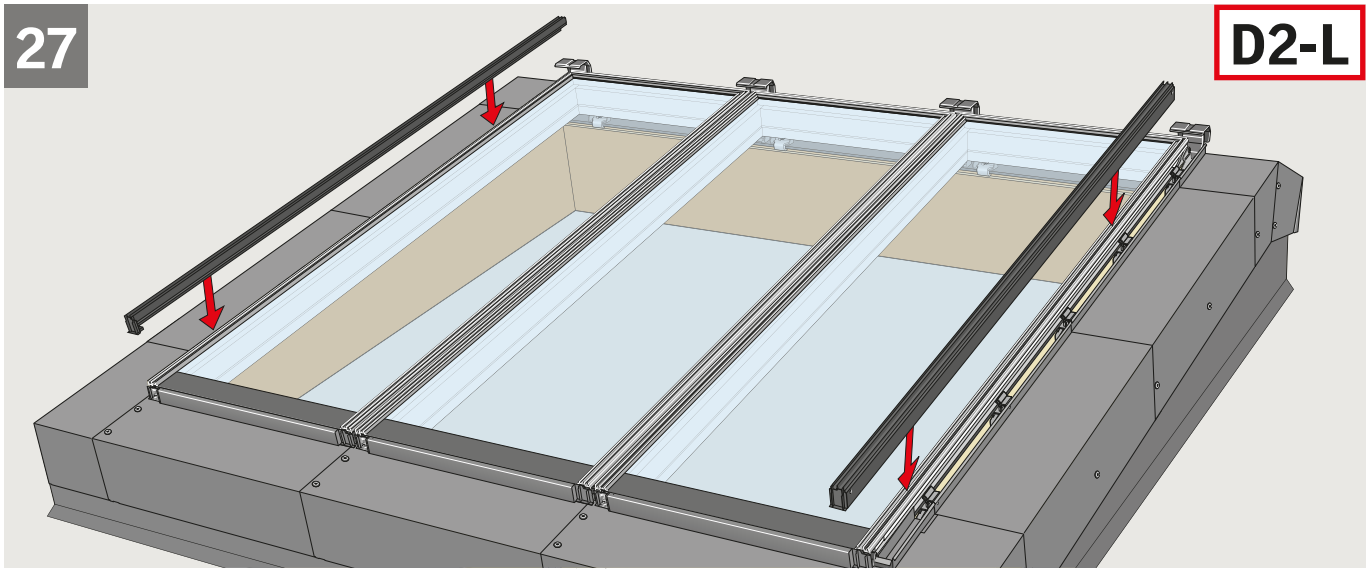
27
D2-L

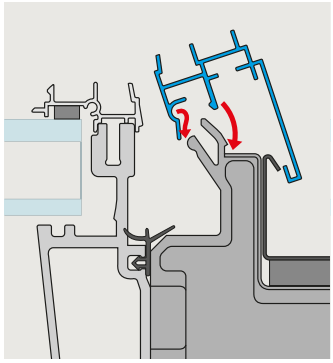

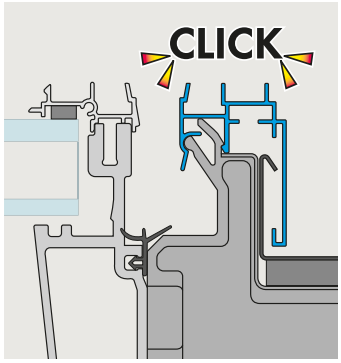
CLICK

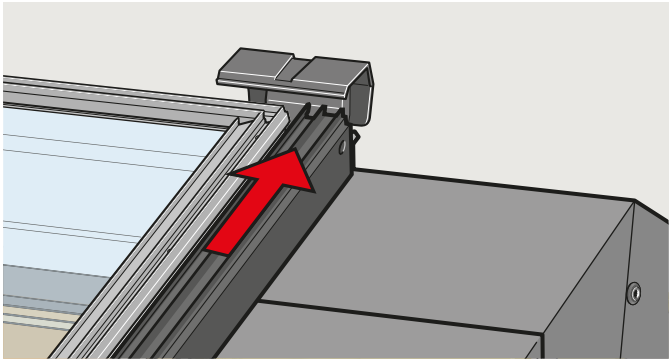

28

D2-L B2-L

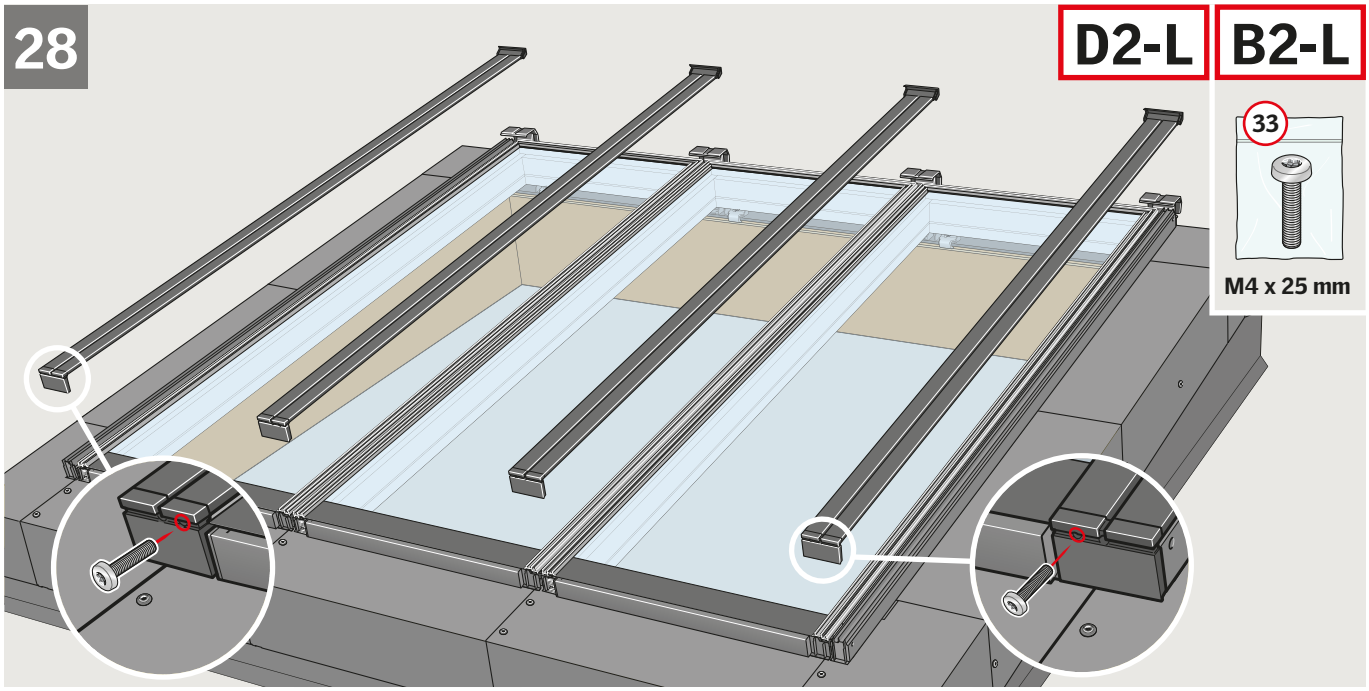

M4 x 25 mm

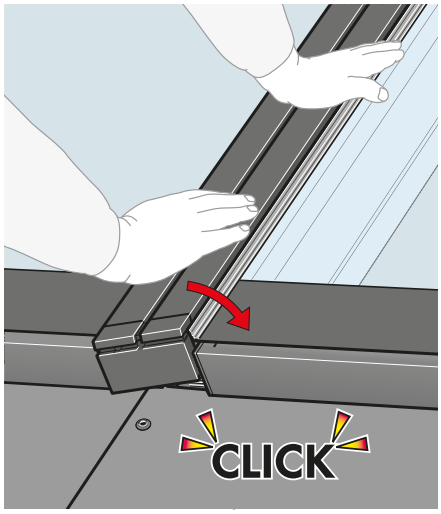

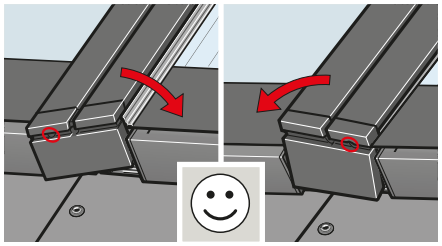

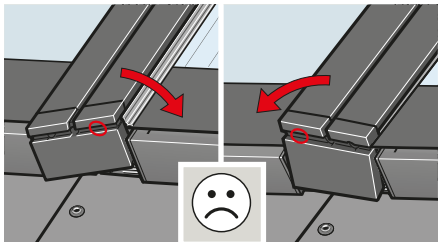

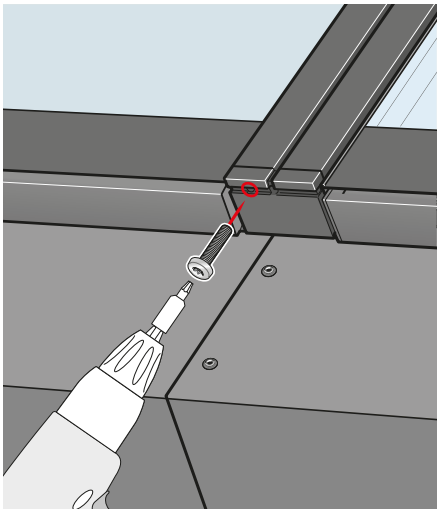

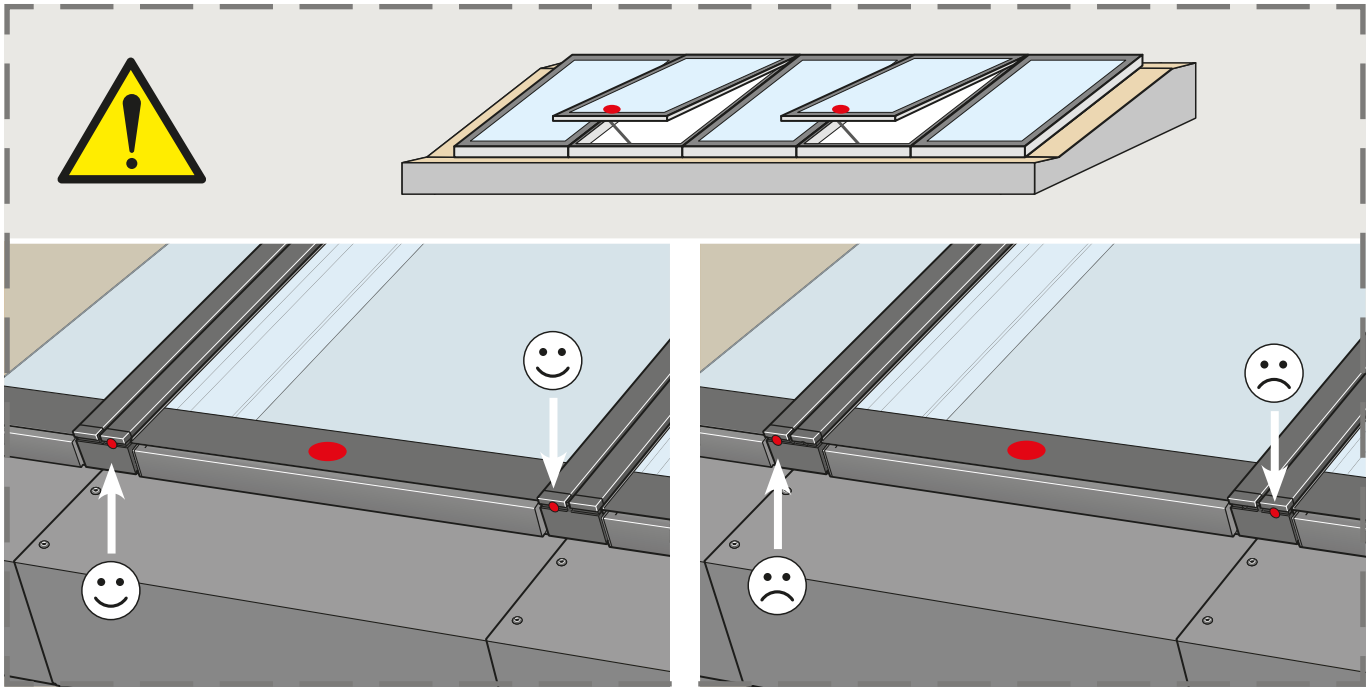

29

D3-L

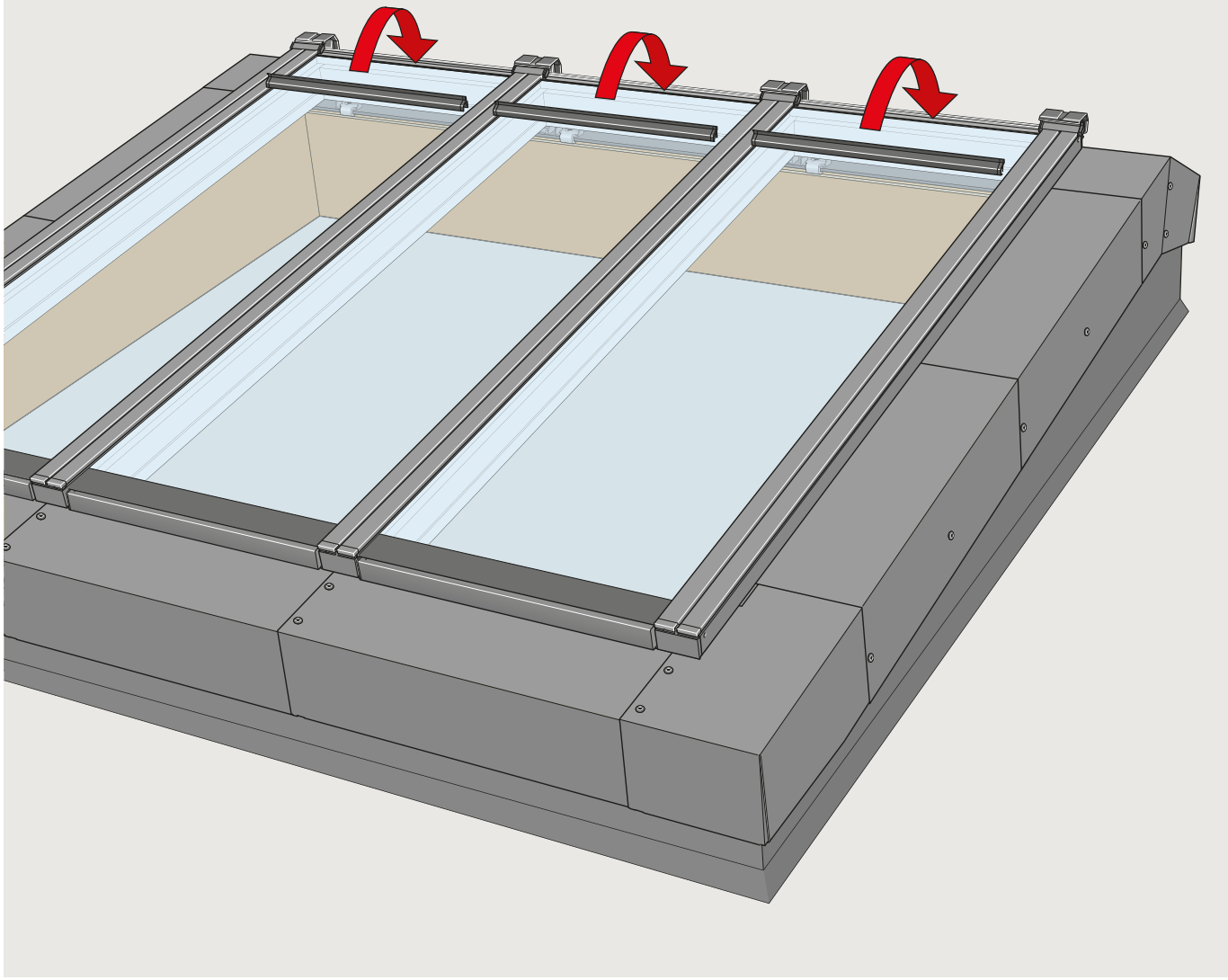

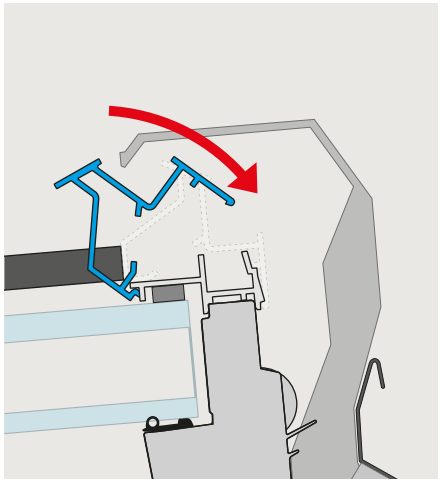

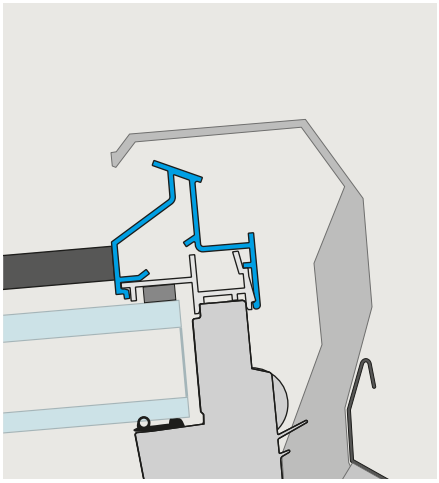

30

D3-L | D4-L | B1-L

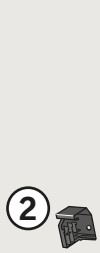

5,5 x 27 mm

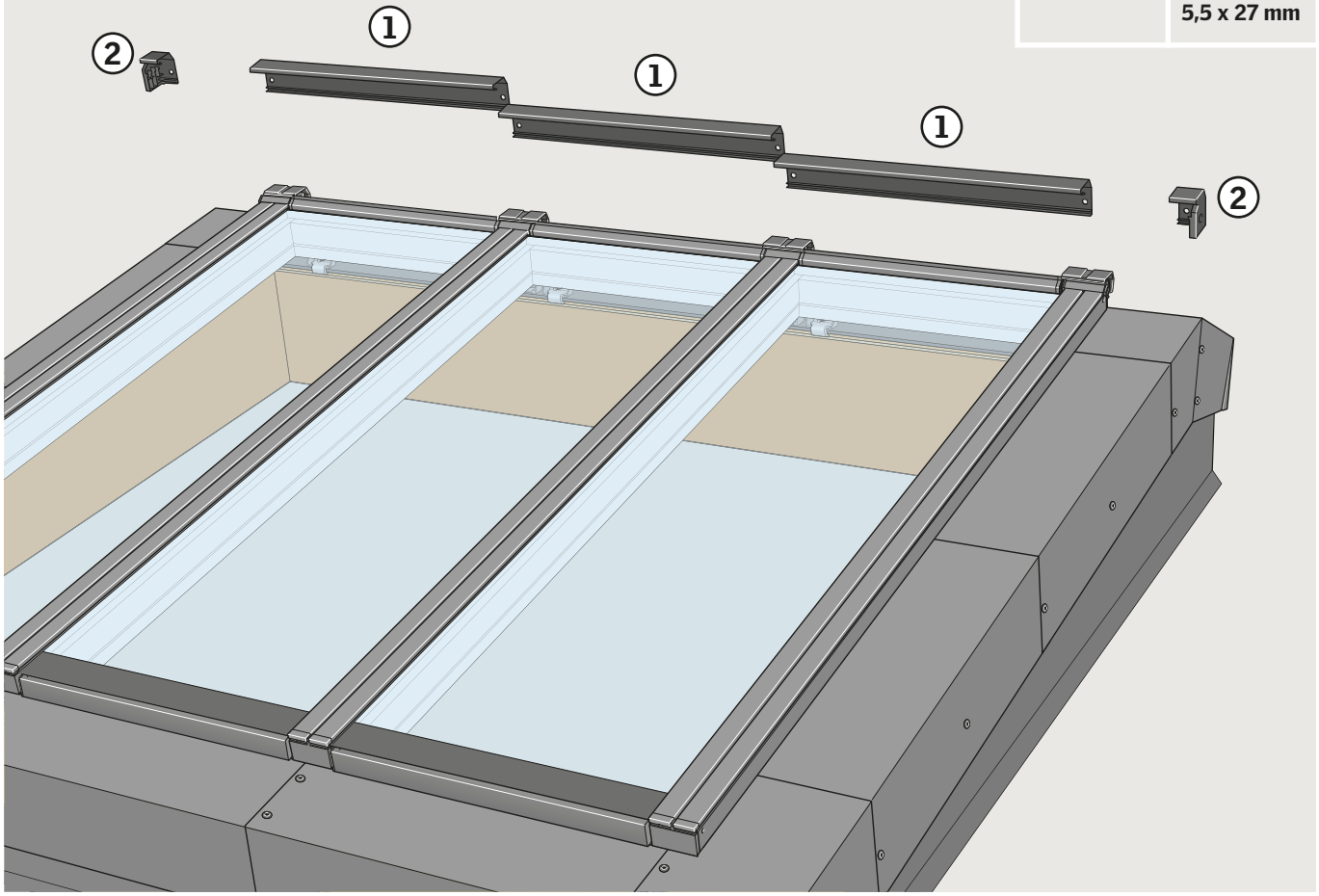

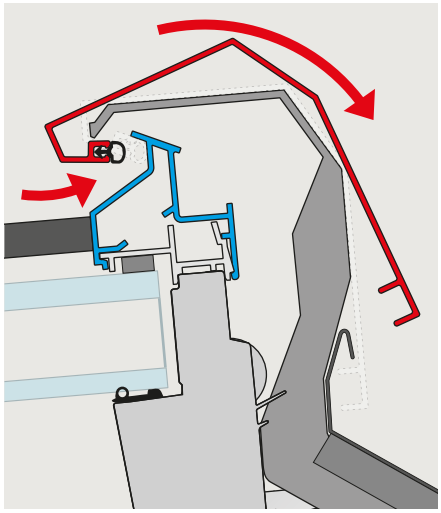

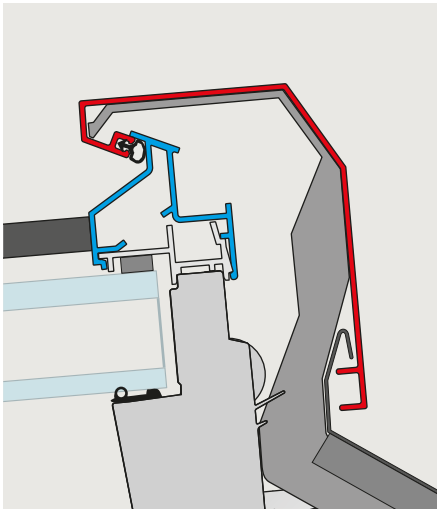

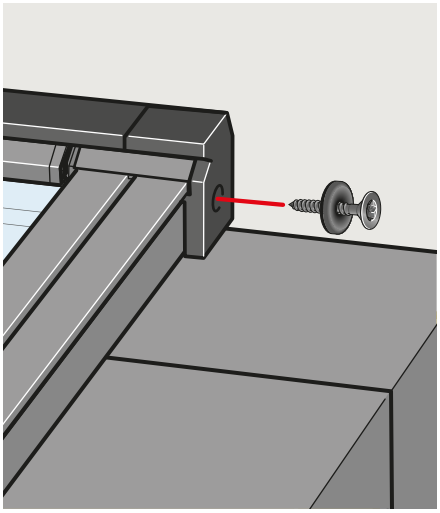

KCD

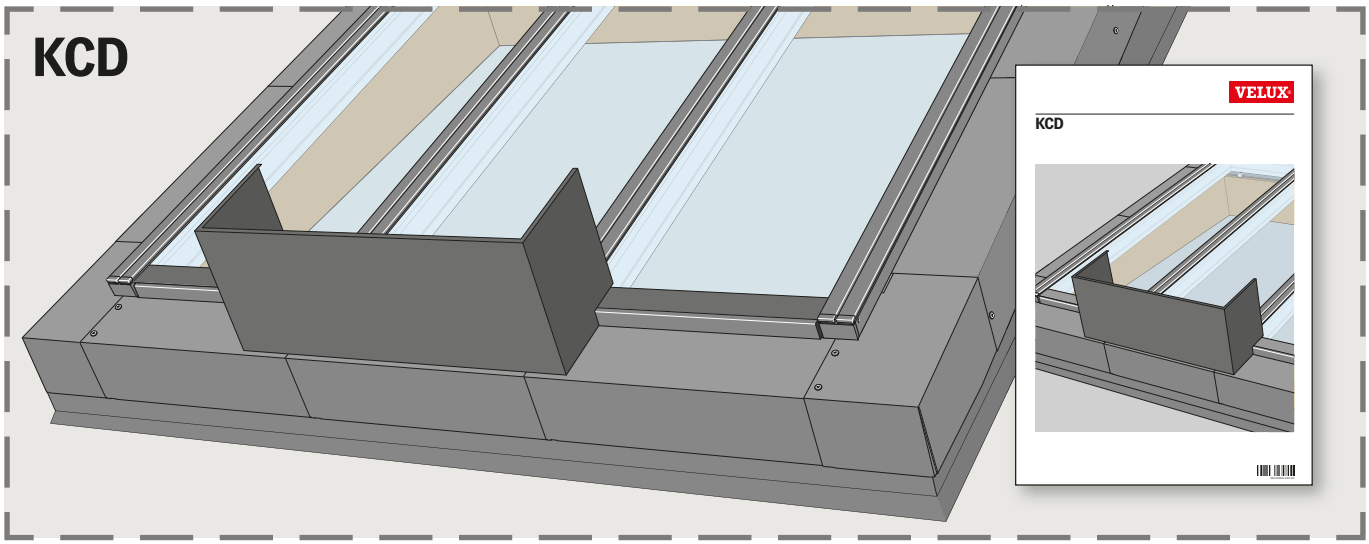

31

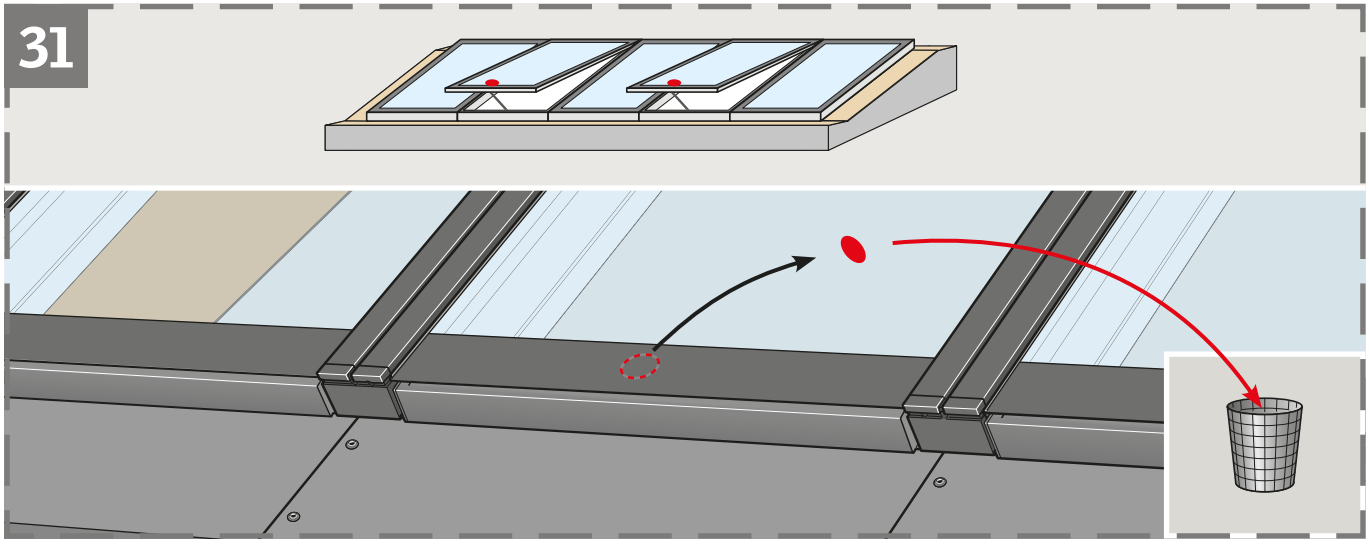

32

BCX

BCX

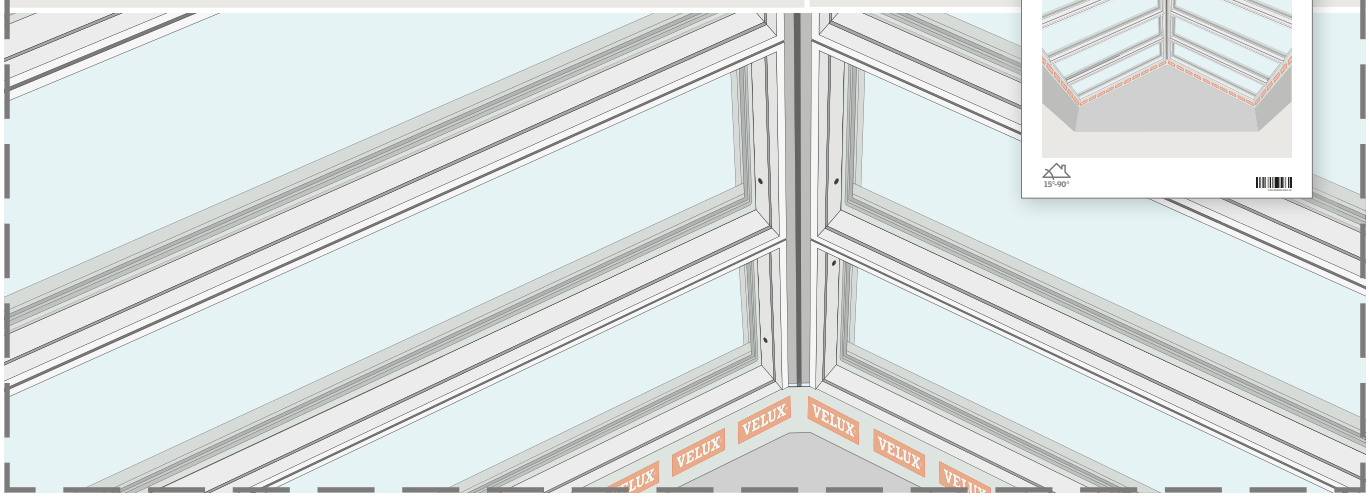

VELUX®

INSTALLATION INSTRUCTIONS FOR VELUX MODULAR SKYLIGHT - HFC/HVC + ELC. ©2018, 2025 VELUX GROUP ®VELUX AND THE VELUX LOGO ARE REGISTERED TRADEMARKS USED UNDER LICENCE BY THE VELUX GROUP

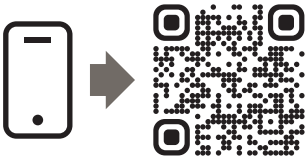

velux.com/contact

www.velux.com