VELUX®

CVP + ISD
CVP + ZCE + ISD
Rod operated

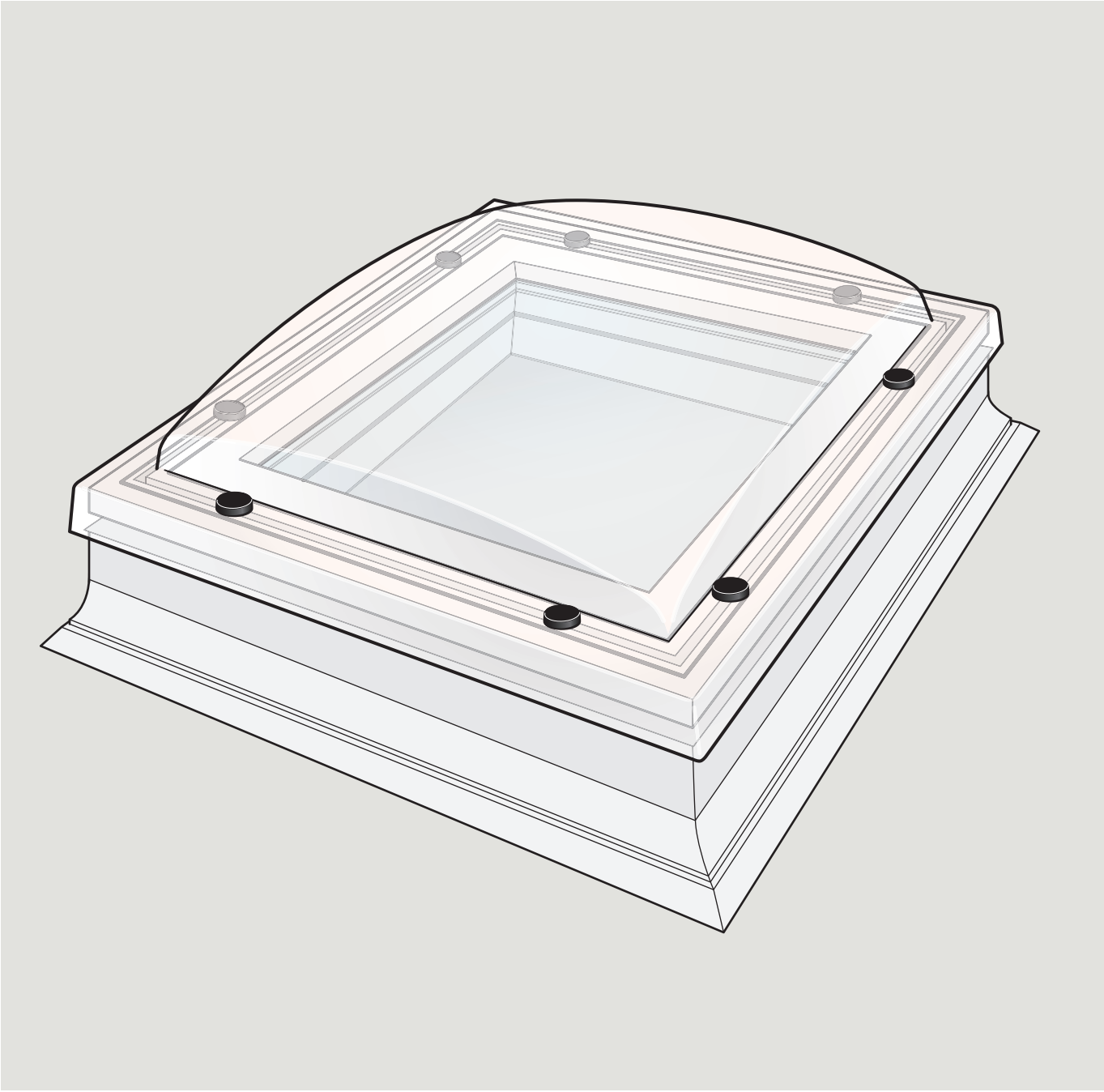

0°-15°

VAS 453828-2025-07

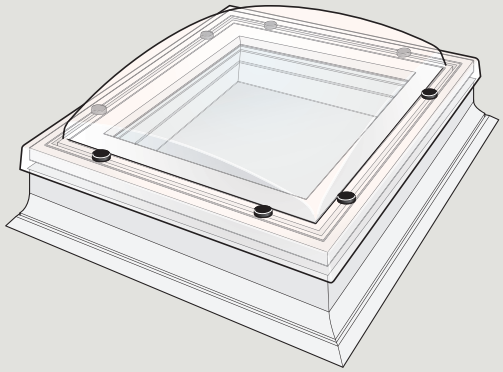

CVP + ISD
Rod operated

Pages 3-9

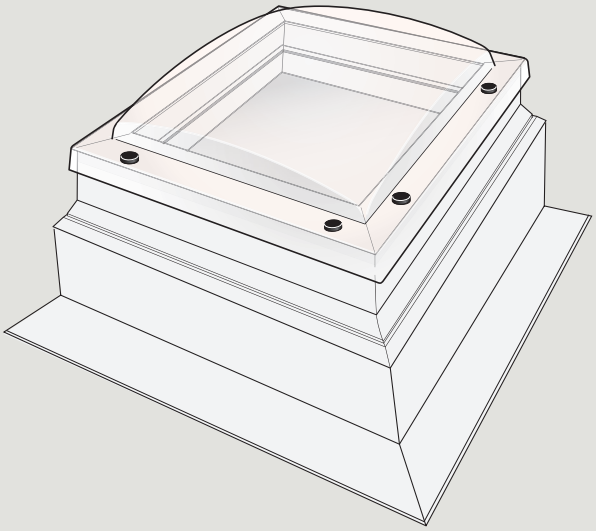

CVP + ZCE + ISD
Rod operated

Pages 10-20

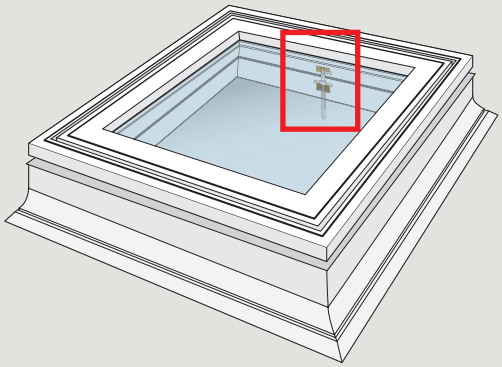

Mounting screw Jack

Page 21

1

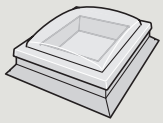

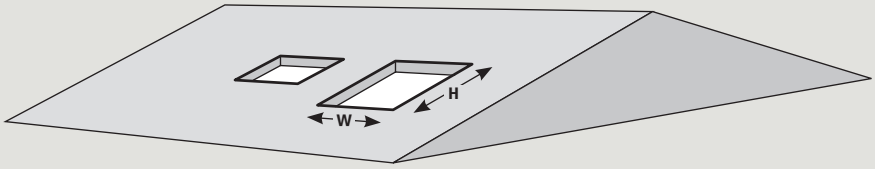

CVP	W mm	H mm
060060	600-610	600-610
080080	800-810	800-810
060090	600-610	900-910
090090	900-910	900-910
090120	900-910	1200-1210
100100	1000-1010	1000-1010
100150	1000-1010	1500-1510
120120	1200-1210	1200-1210

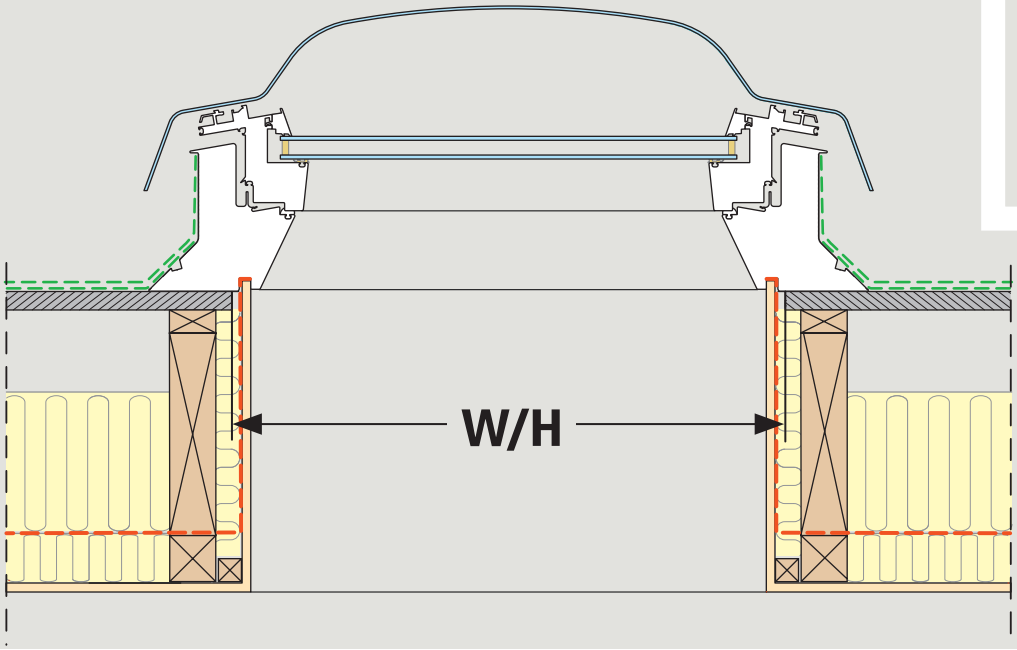

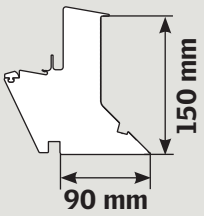

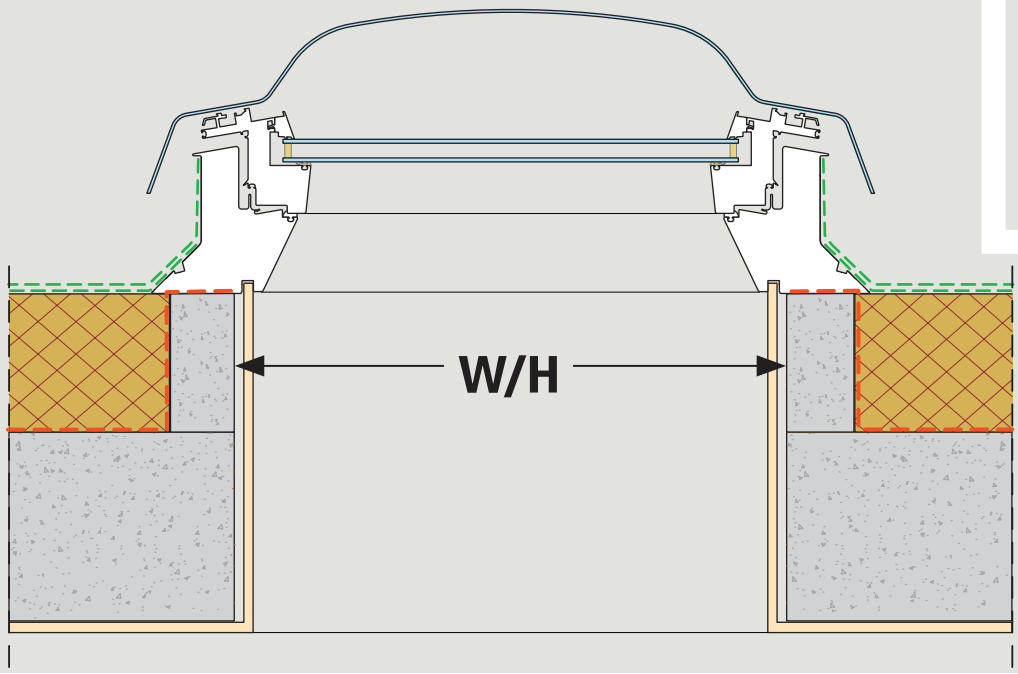

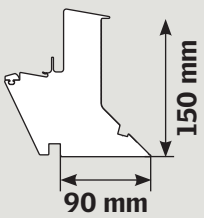

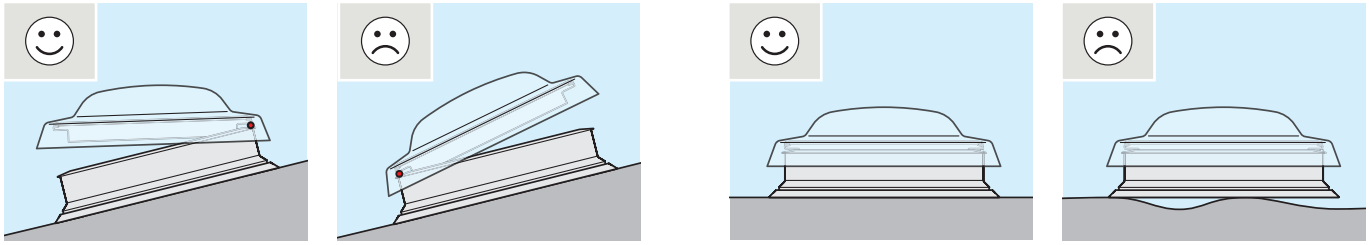

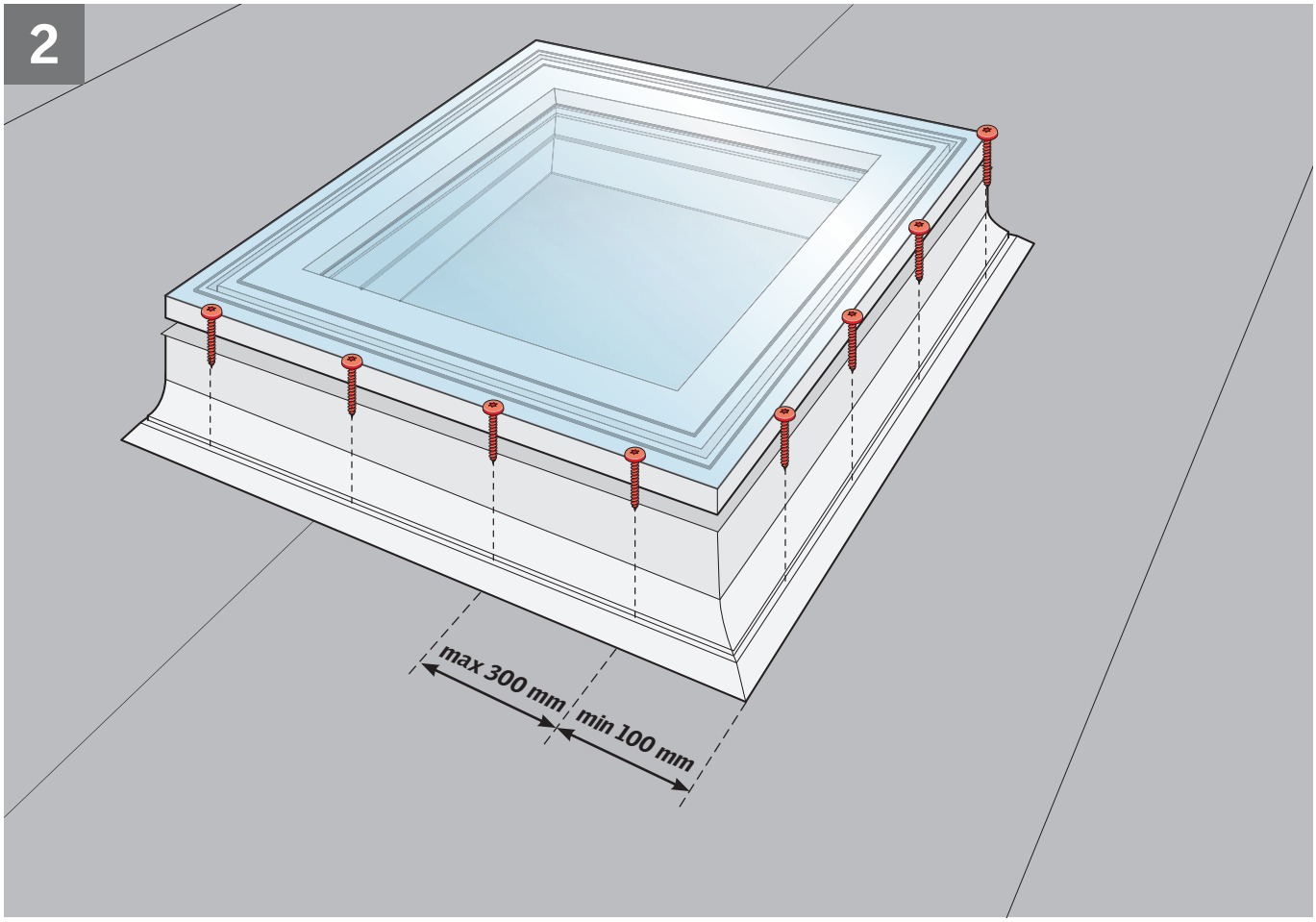
2
max 300 mm
min 100 mm

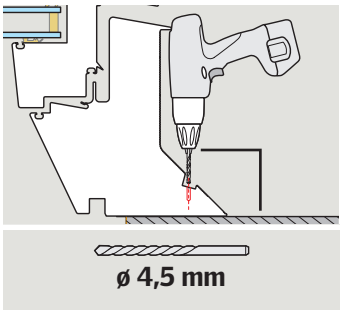
ø 4,5 mm

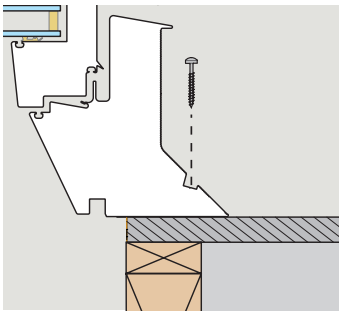

3

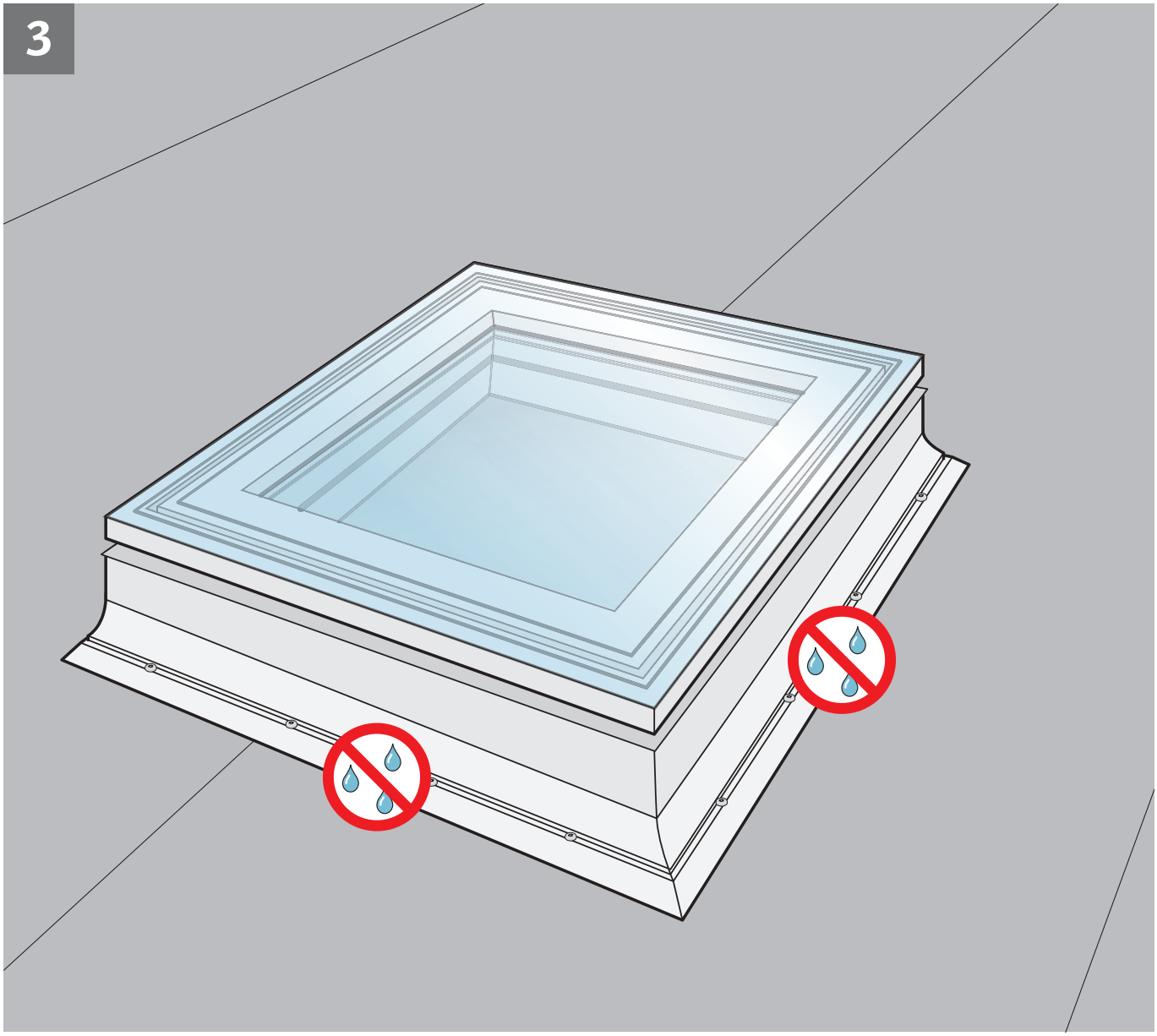

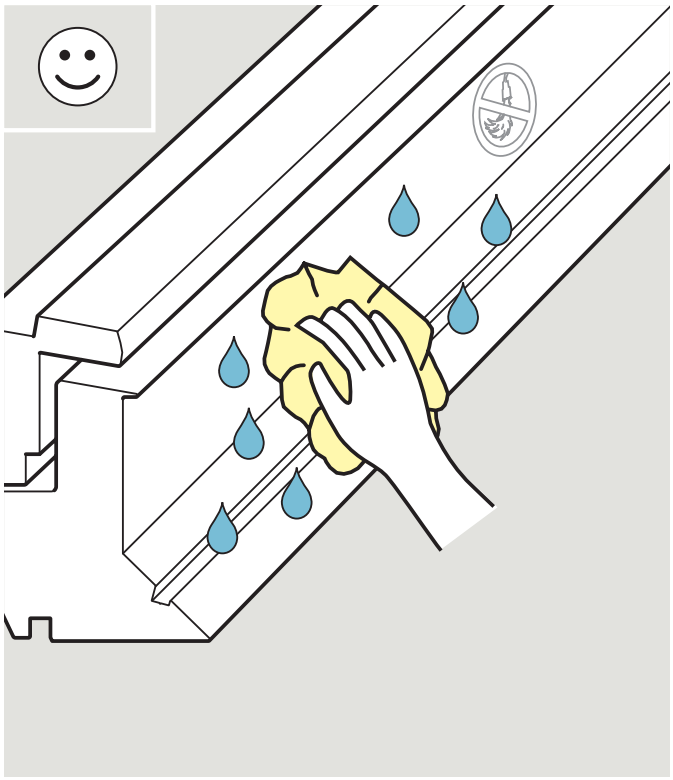

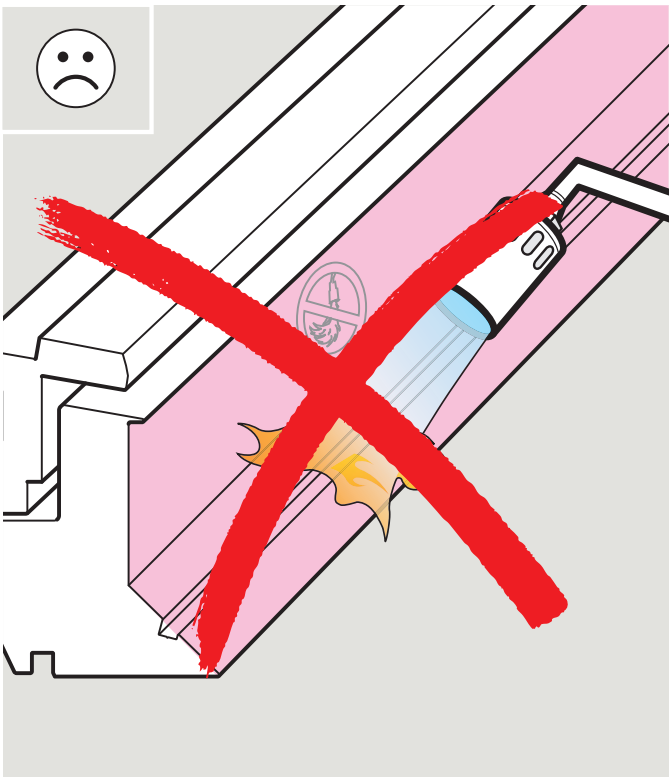

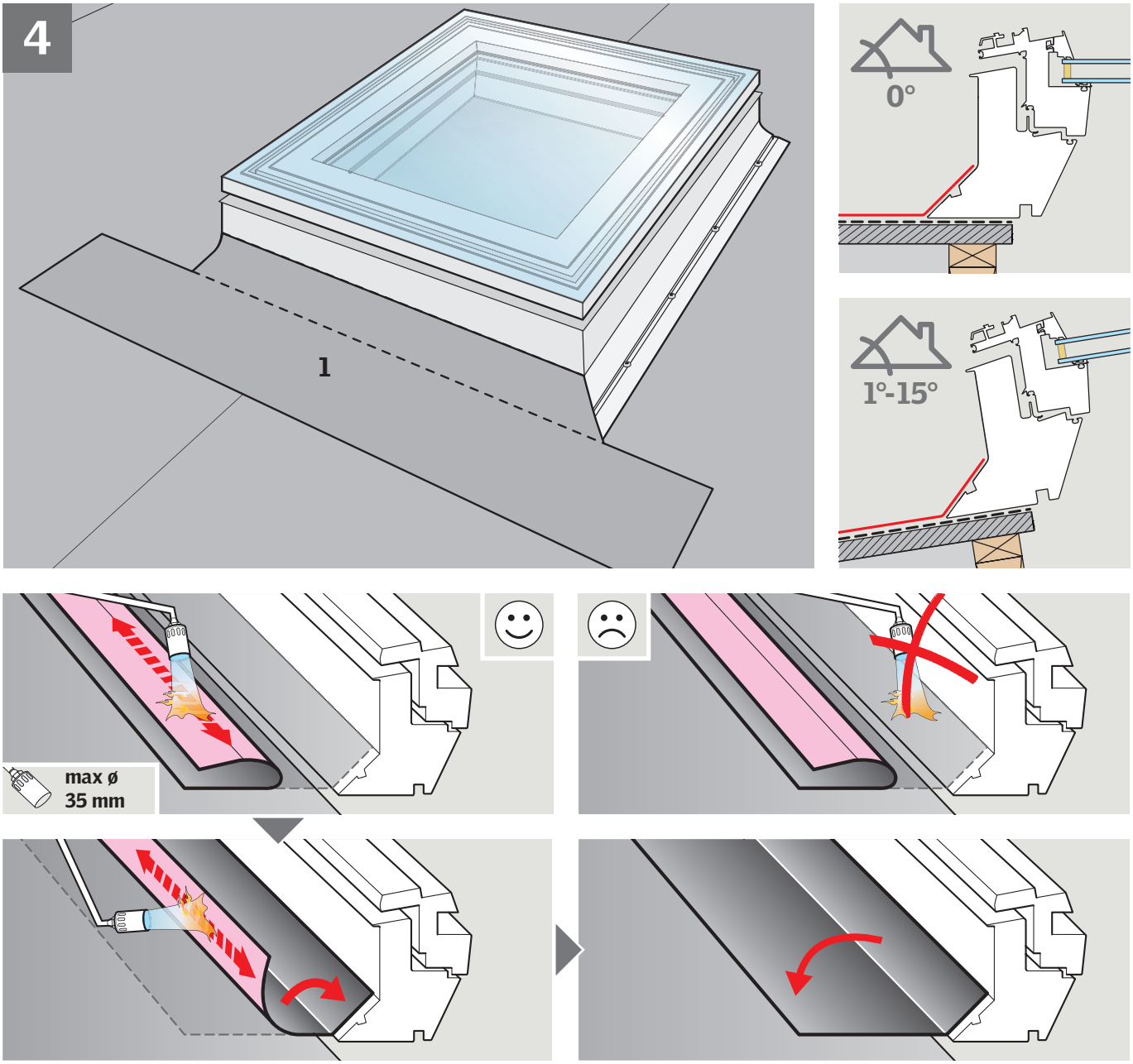
4
1
0°
1°-15°
max ø
35 mm
5
1
2
2
3

6

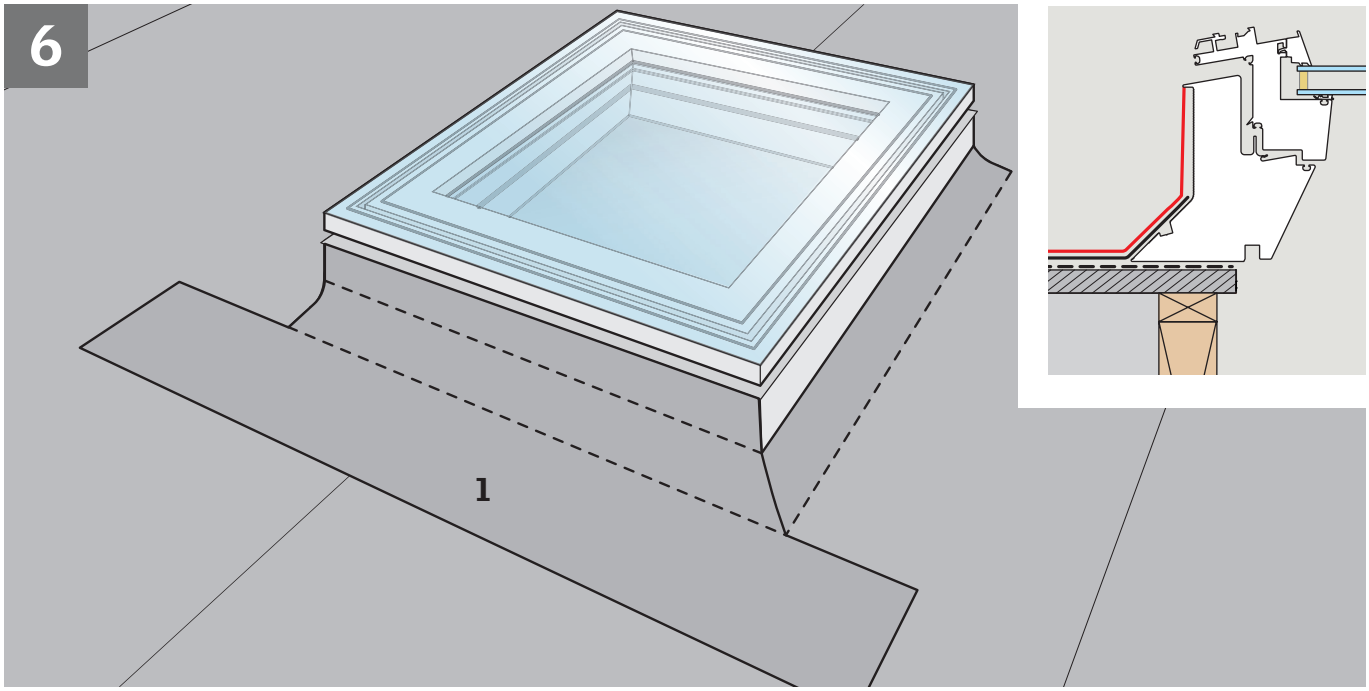

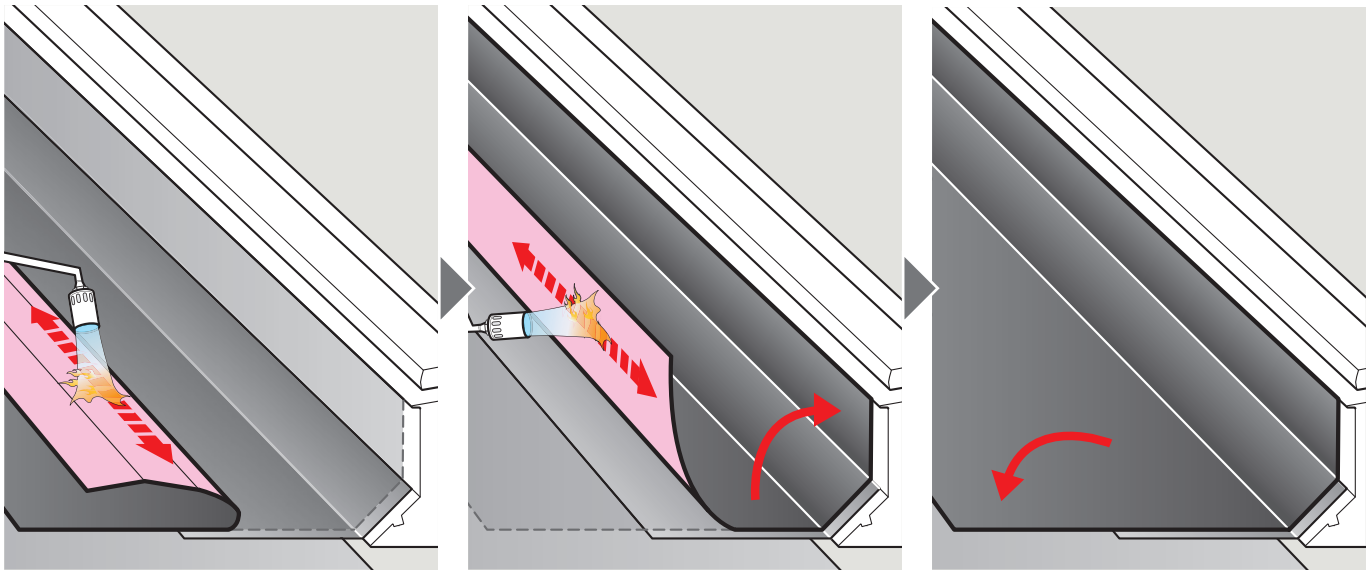

7

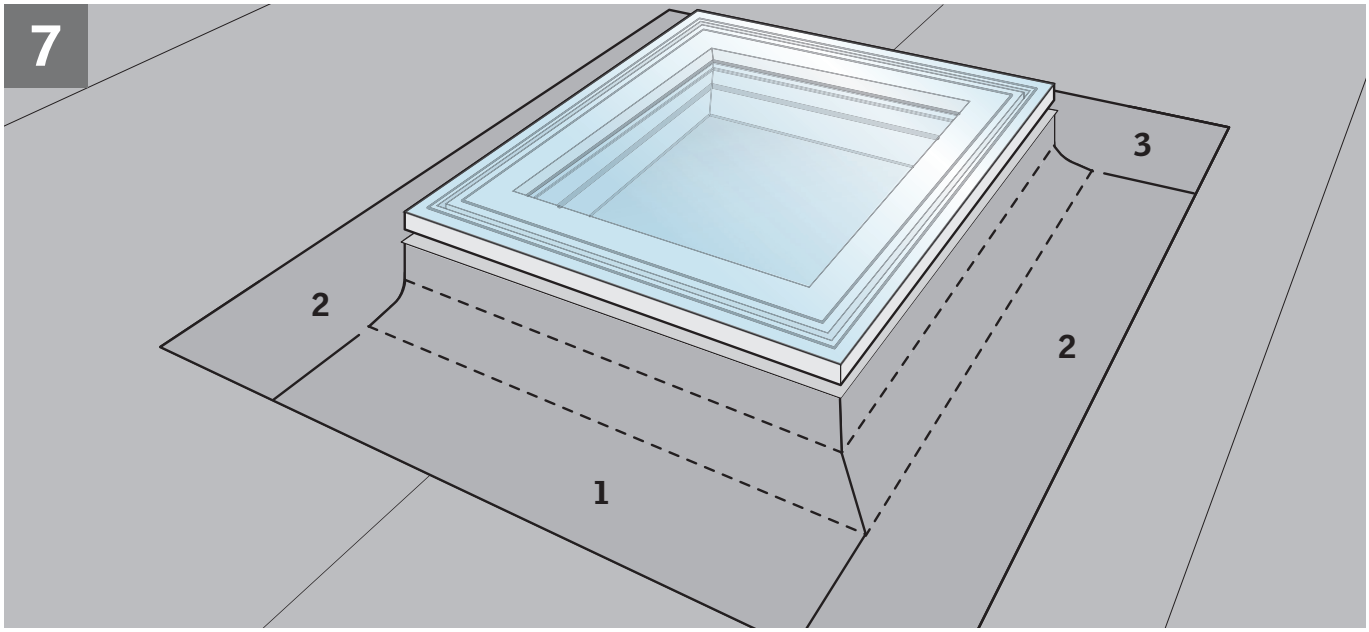

8

ZZZ 210

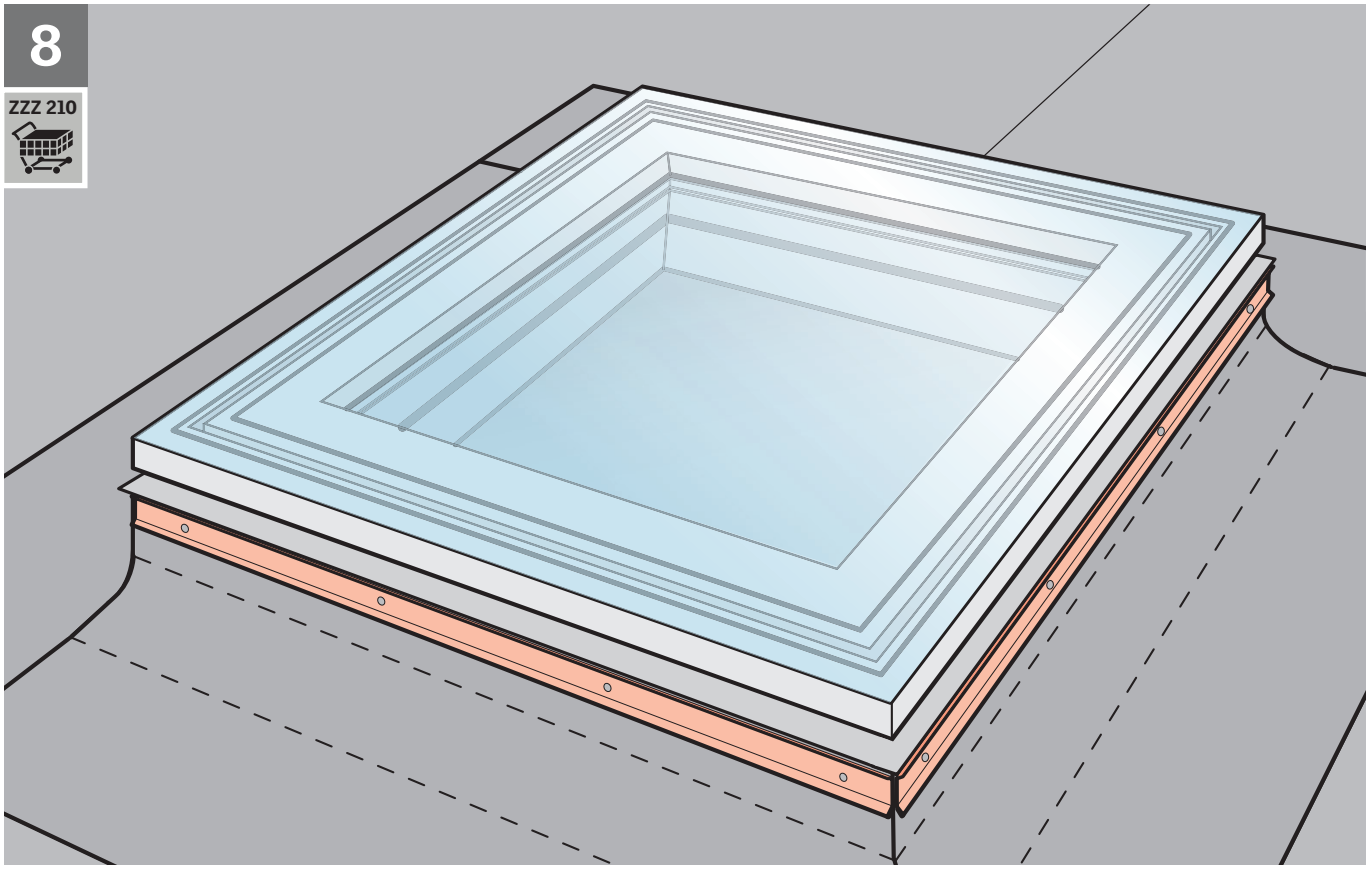

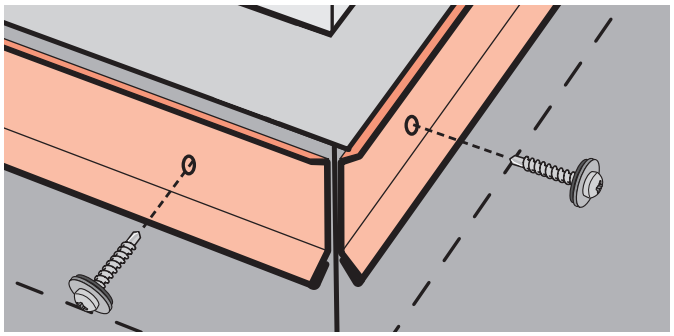

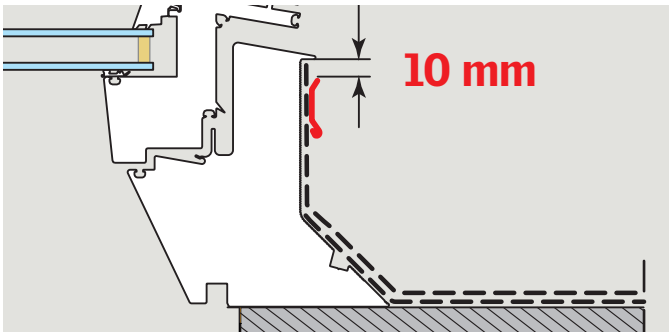

9

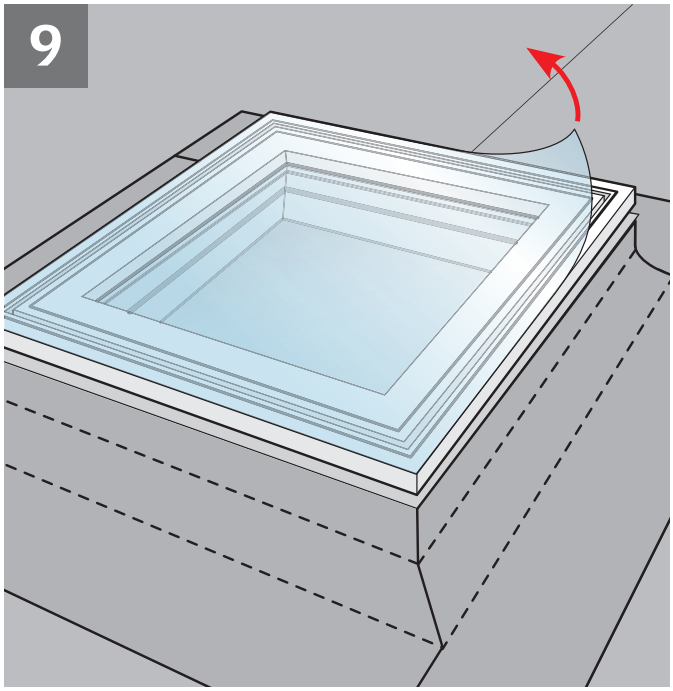

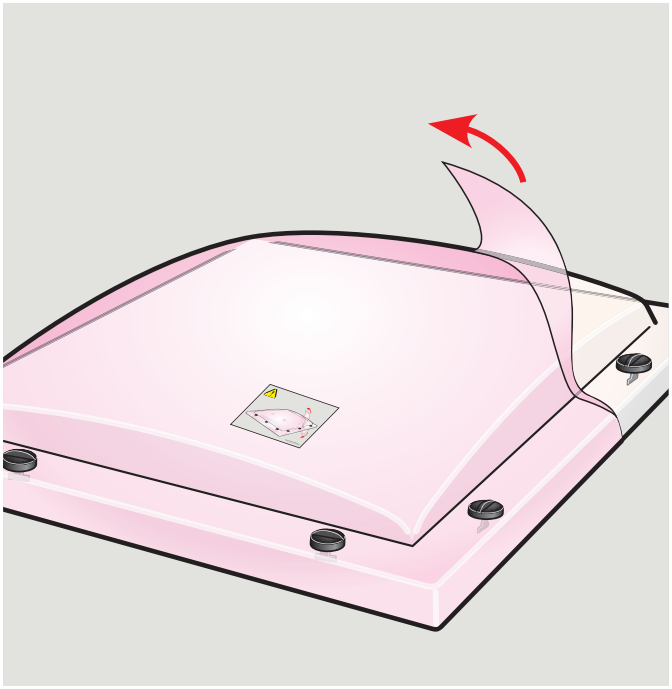

10

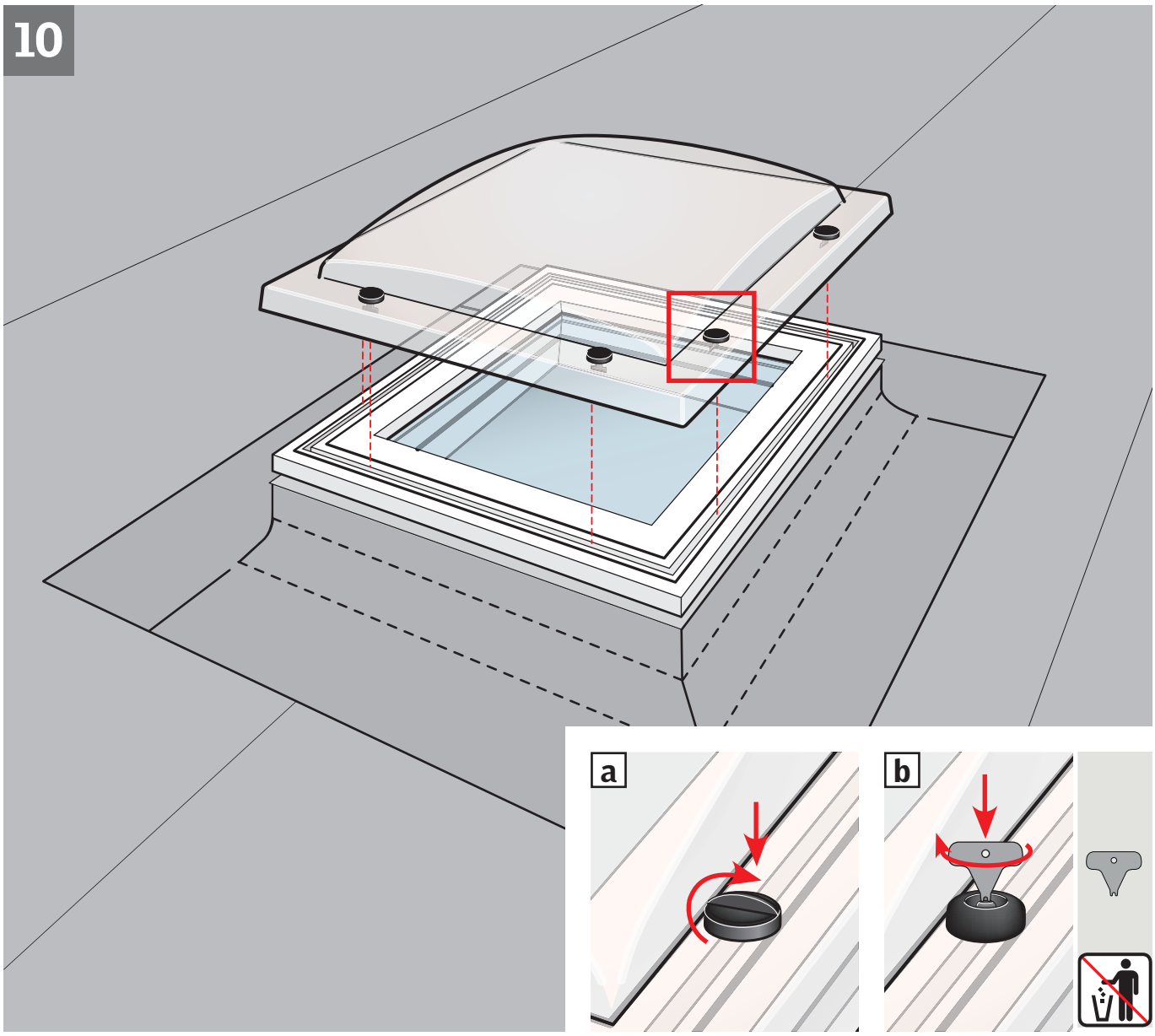

1a

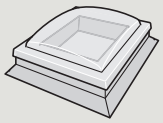

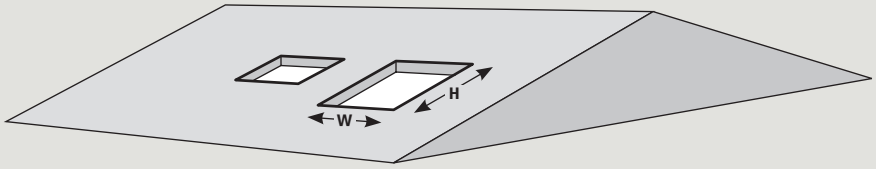

CVP	W mm	H mm
060060	600-610	600-610
080080	800-810	800-810
060090	600-610	900-910
090090	900-910	900-910
090120	900-910	1200-1210
100100	1000-1010	1000-1010
100150	1000-1010	1500-1510
120120	1200-1210	1200-1210

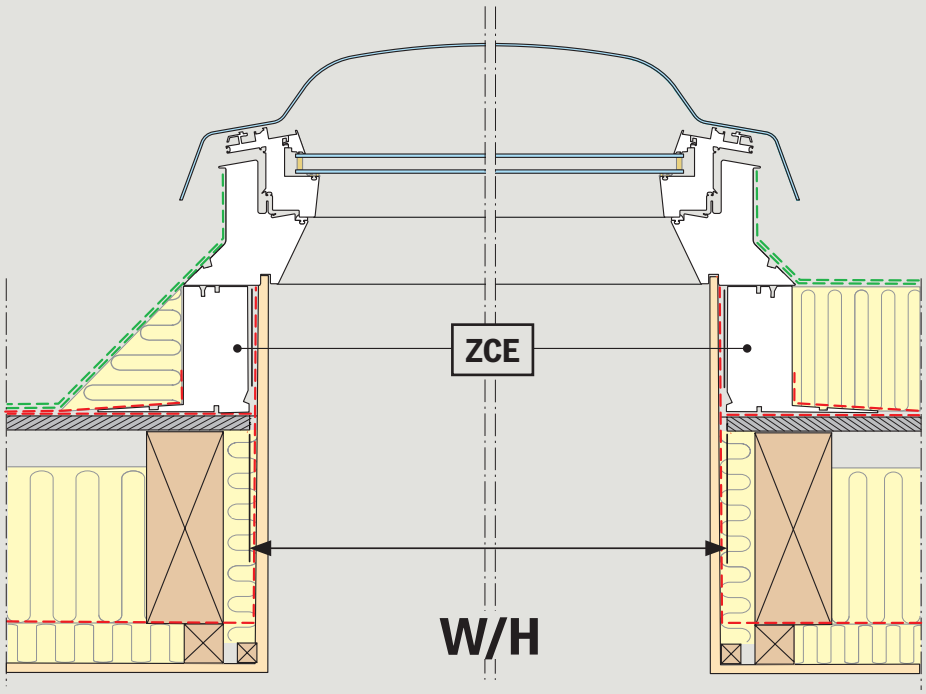

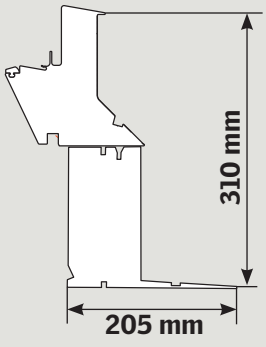

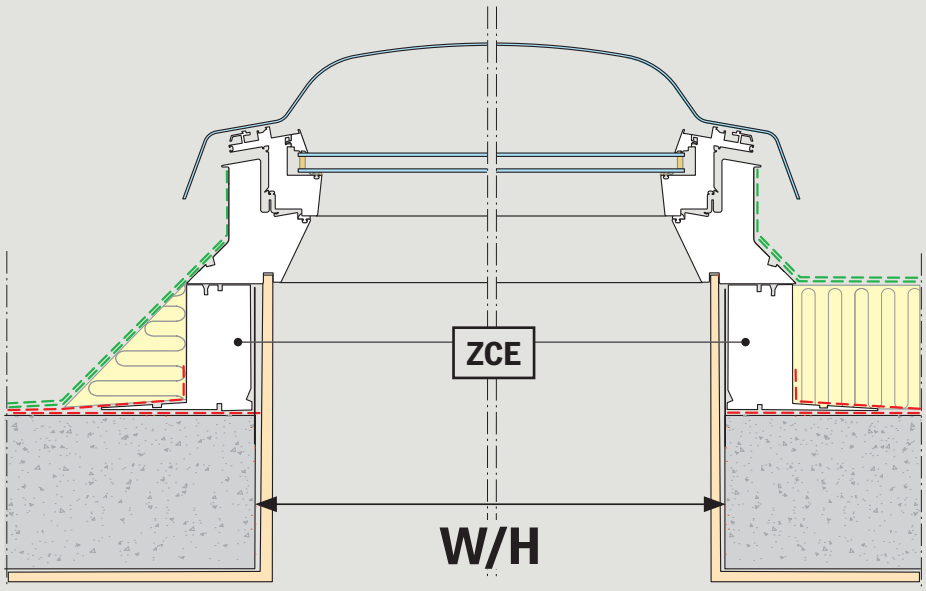

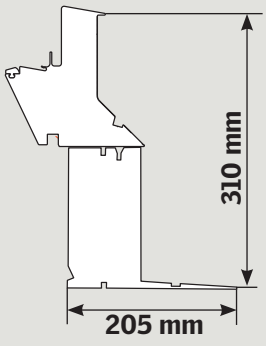

1b

ZCE

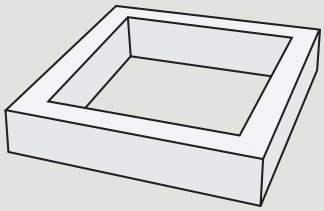

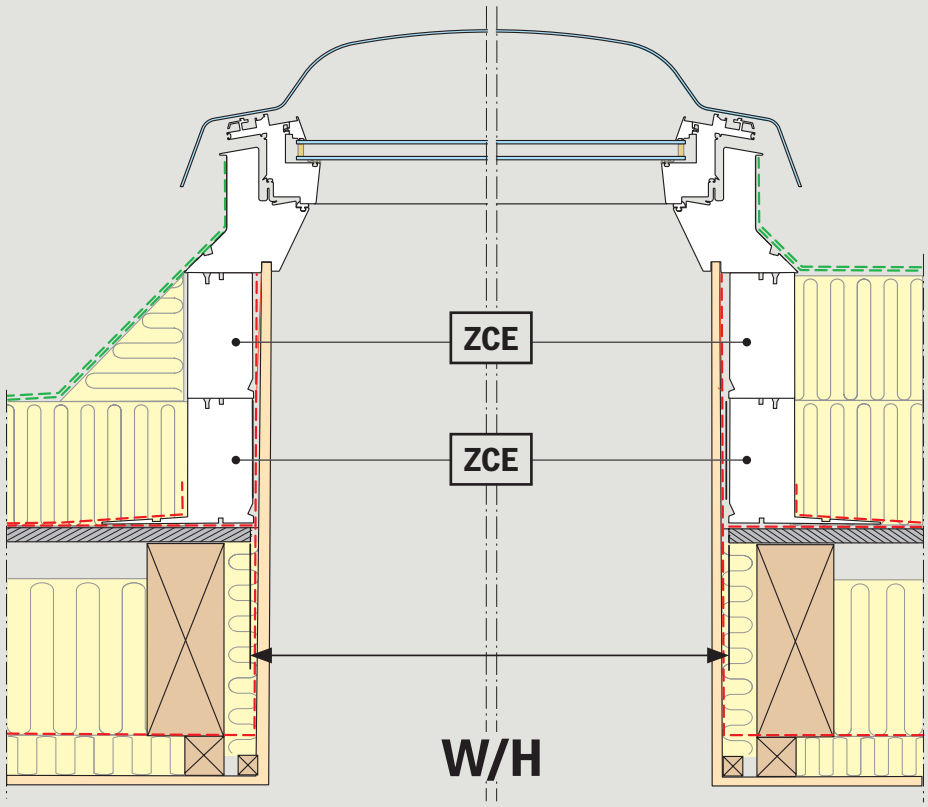

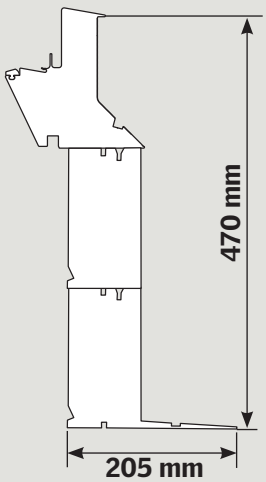

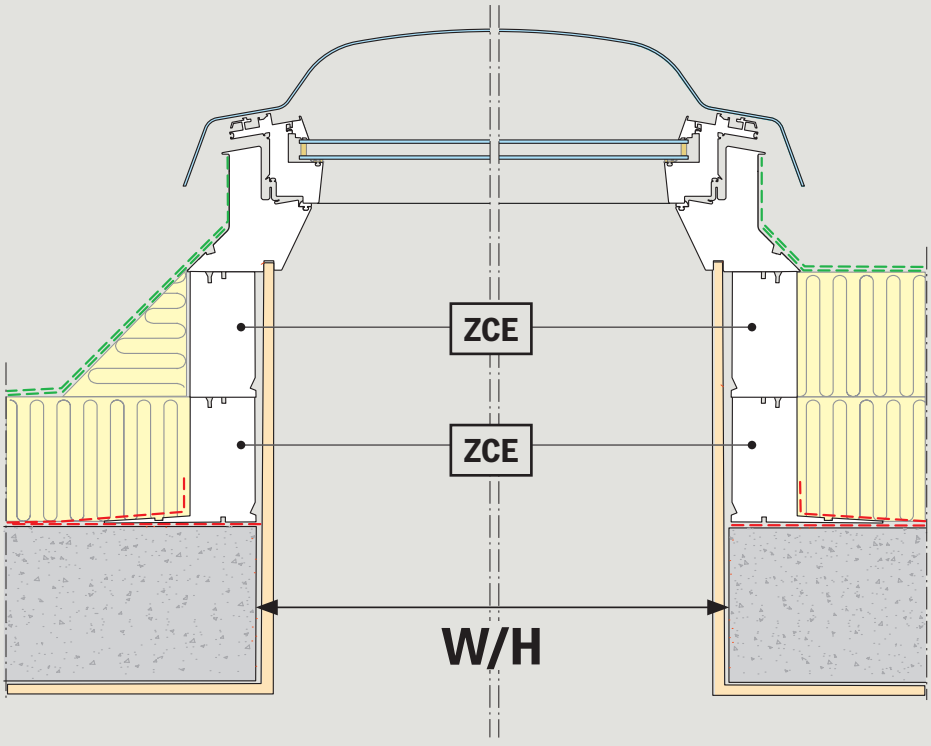

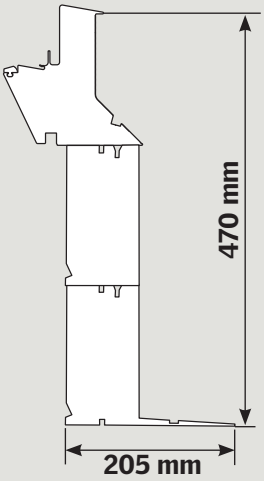

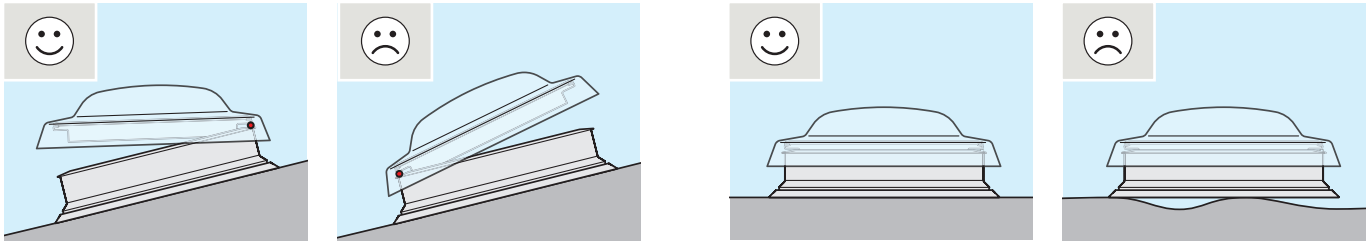

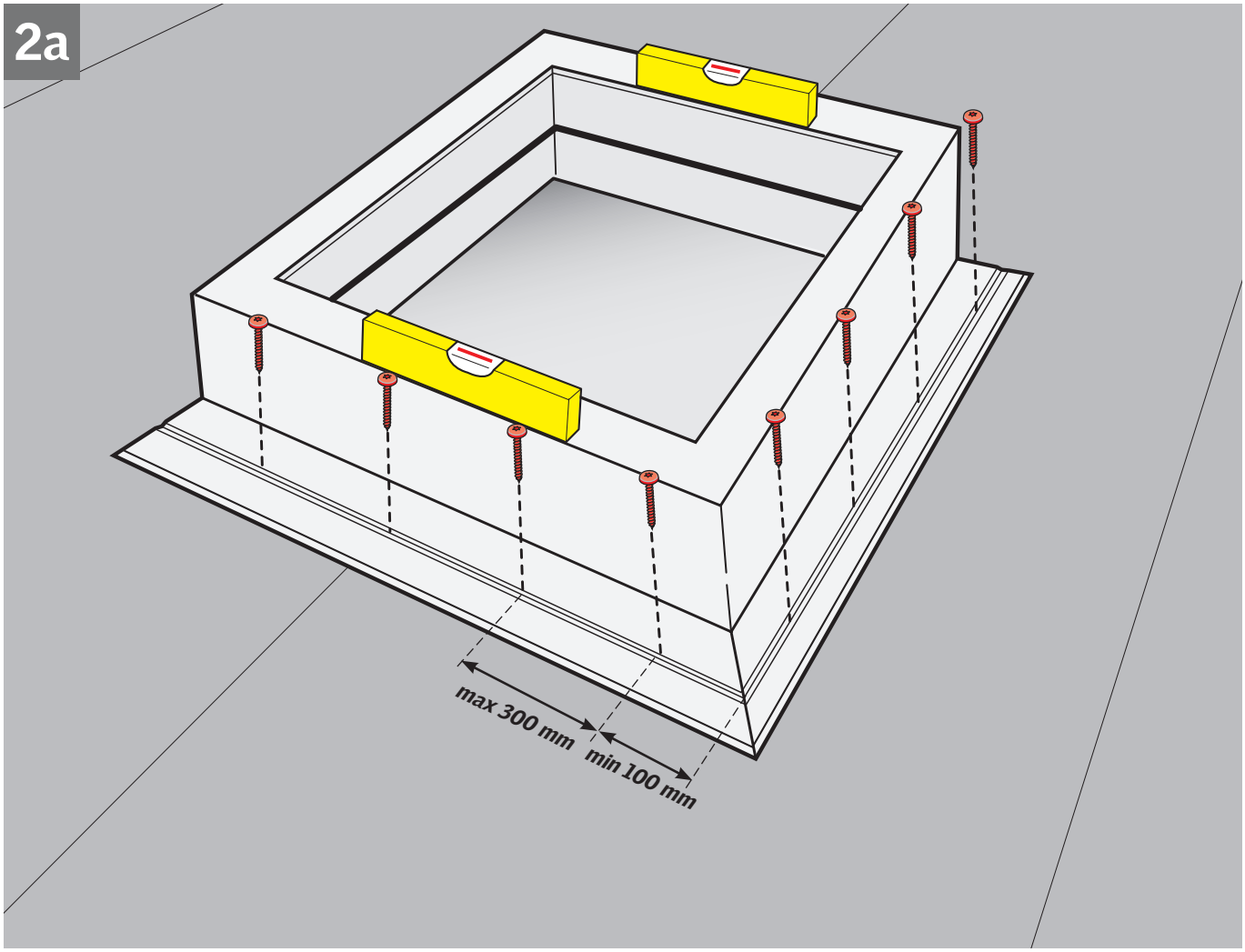
2a
max 300 mm
min 100 mm

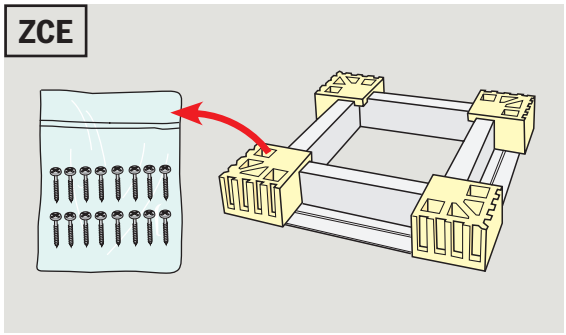
ZCE

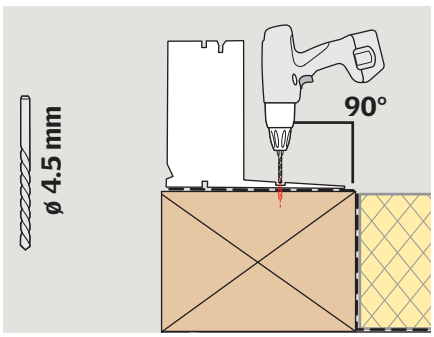
ø 4.5 mm
90°

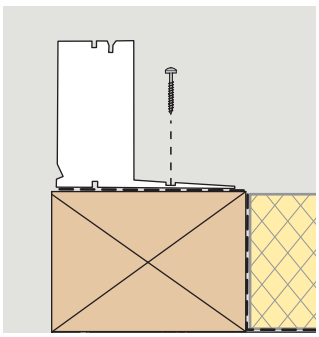

2b

ZCE

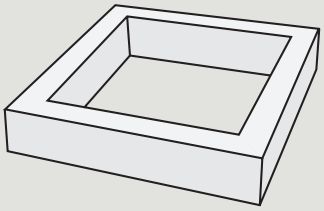

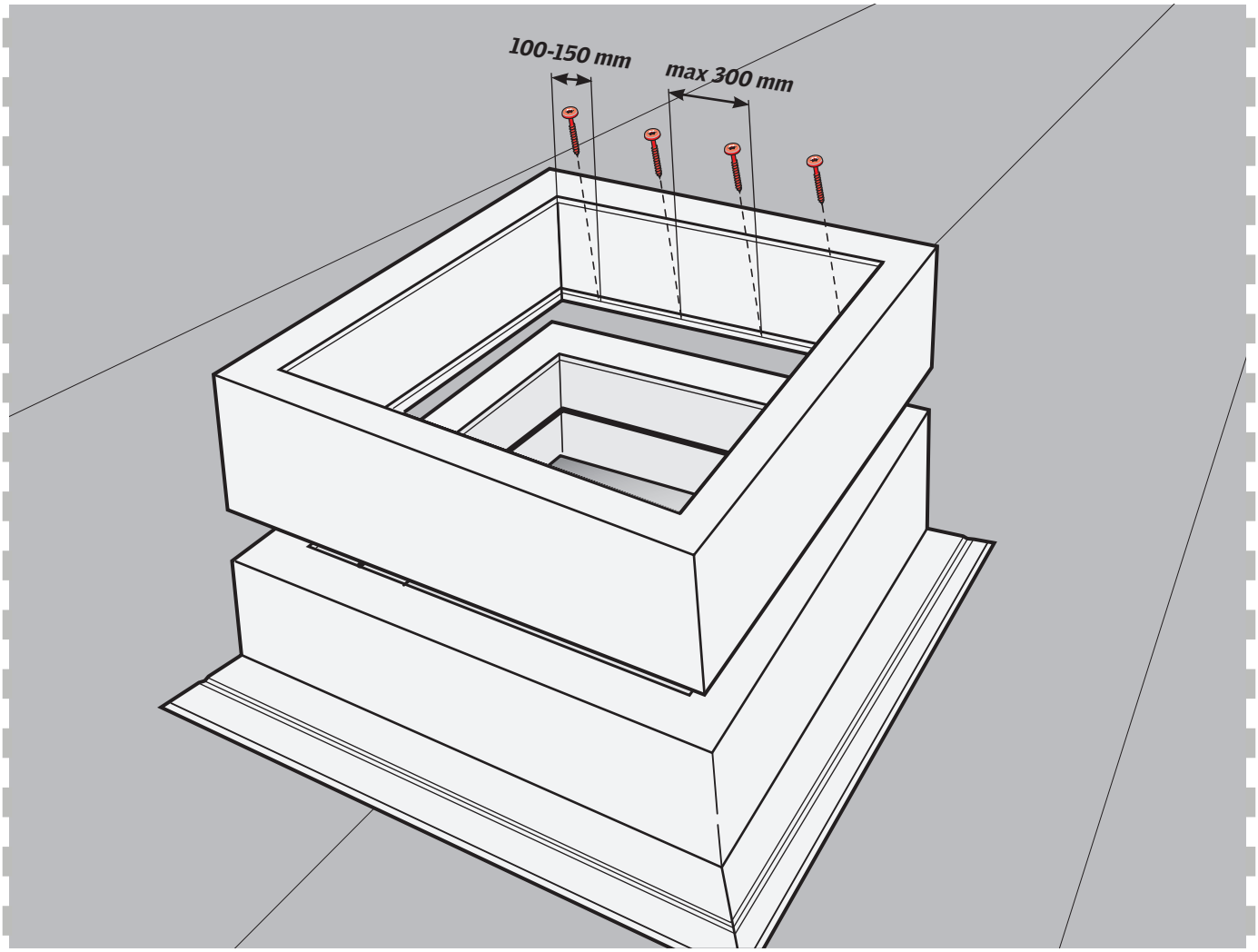

ZCE

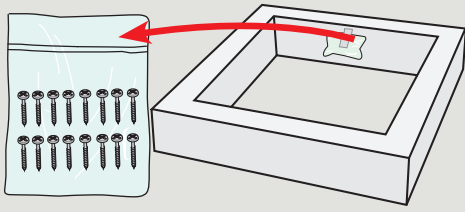



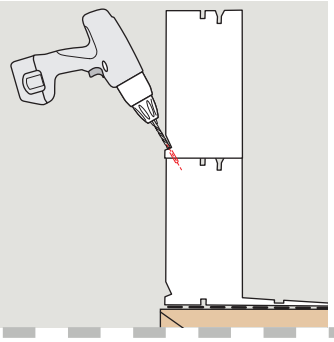

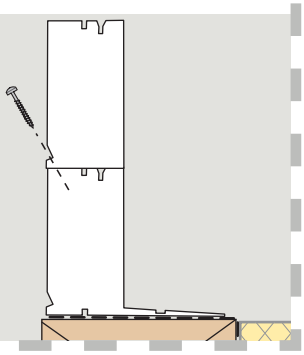

3

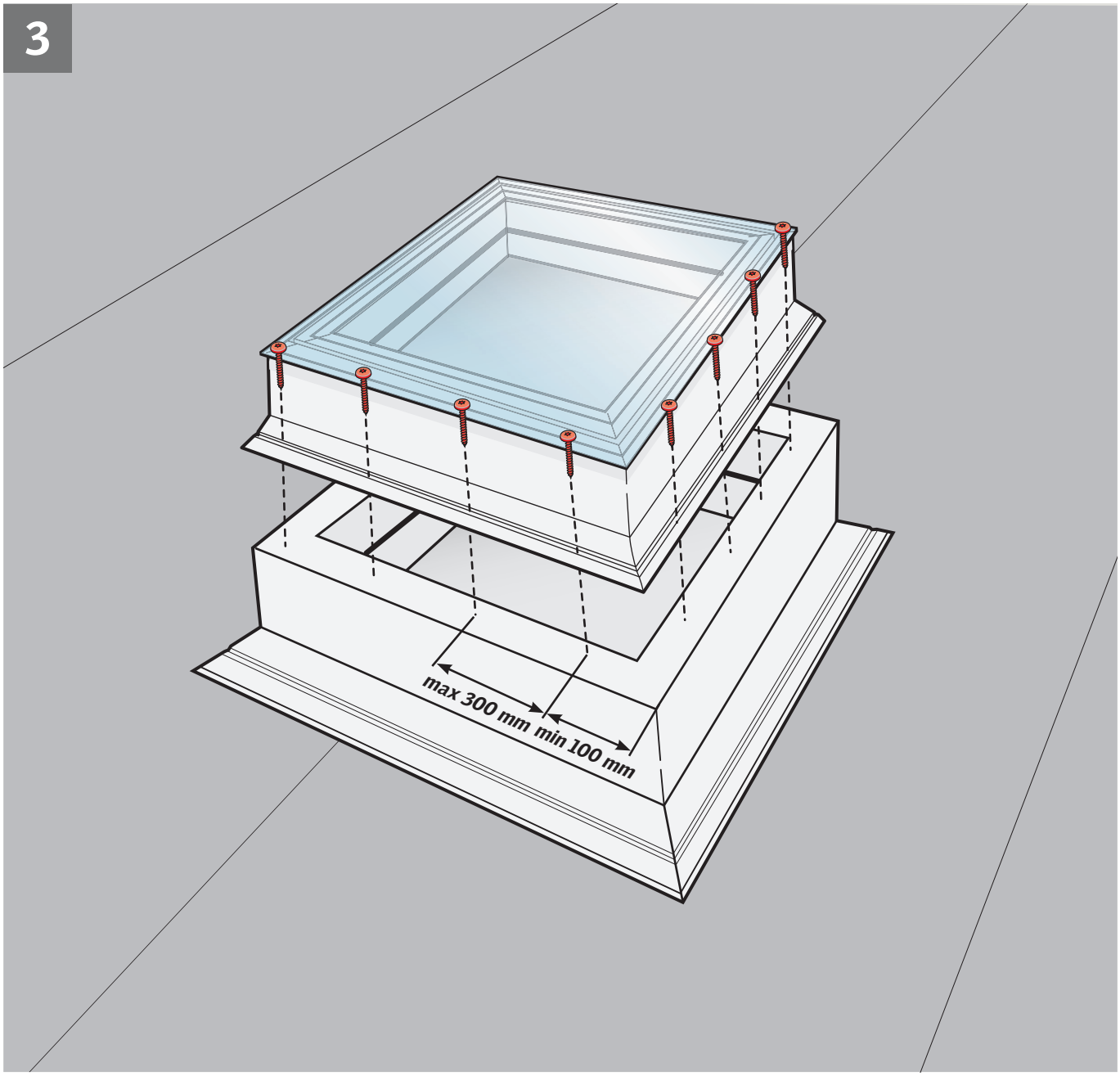

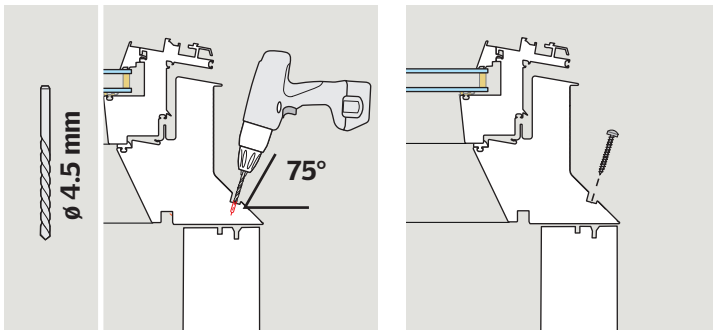

4

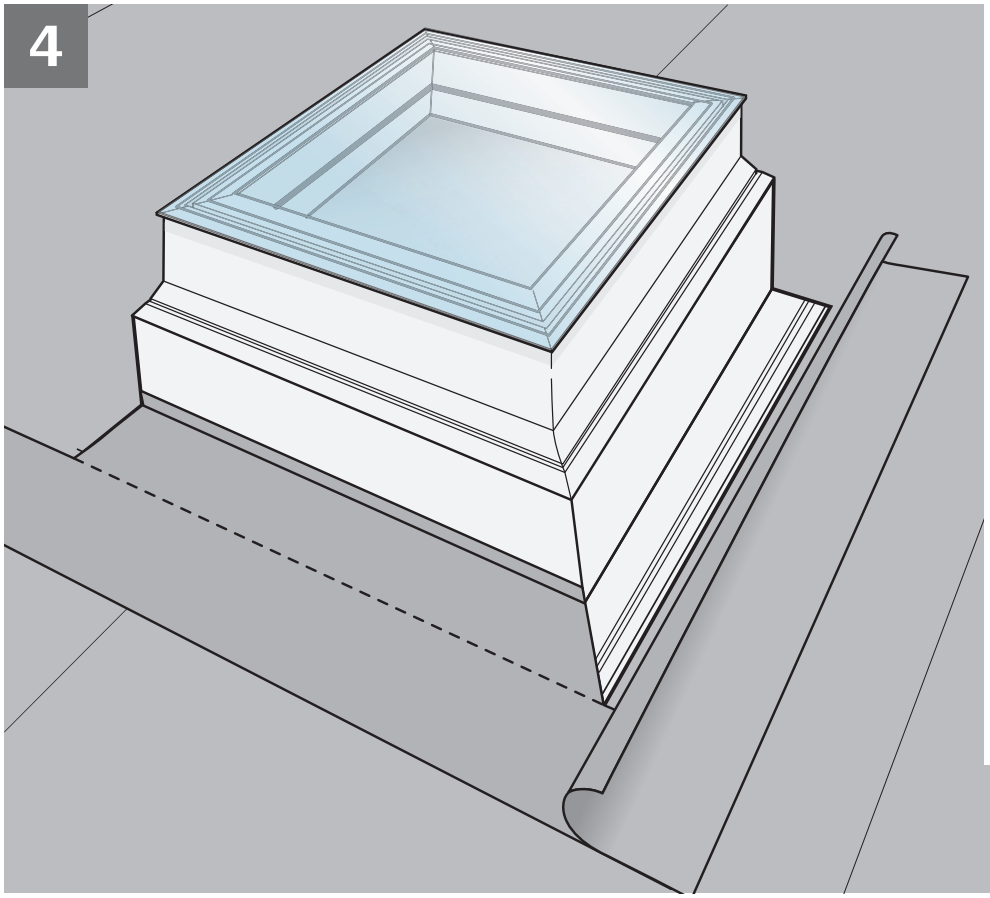

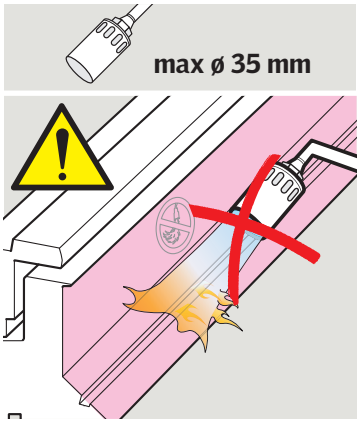

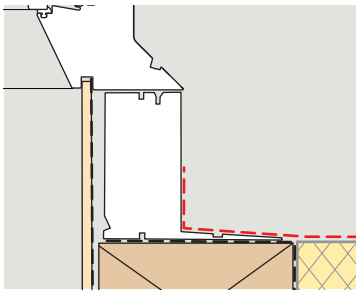

5

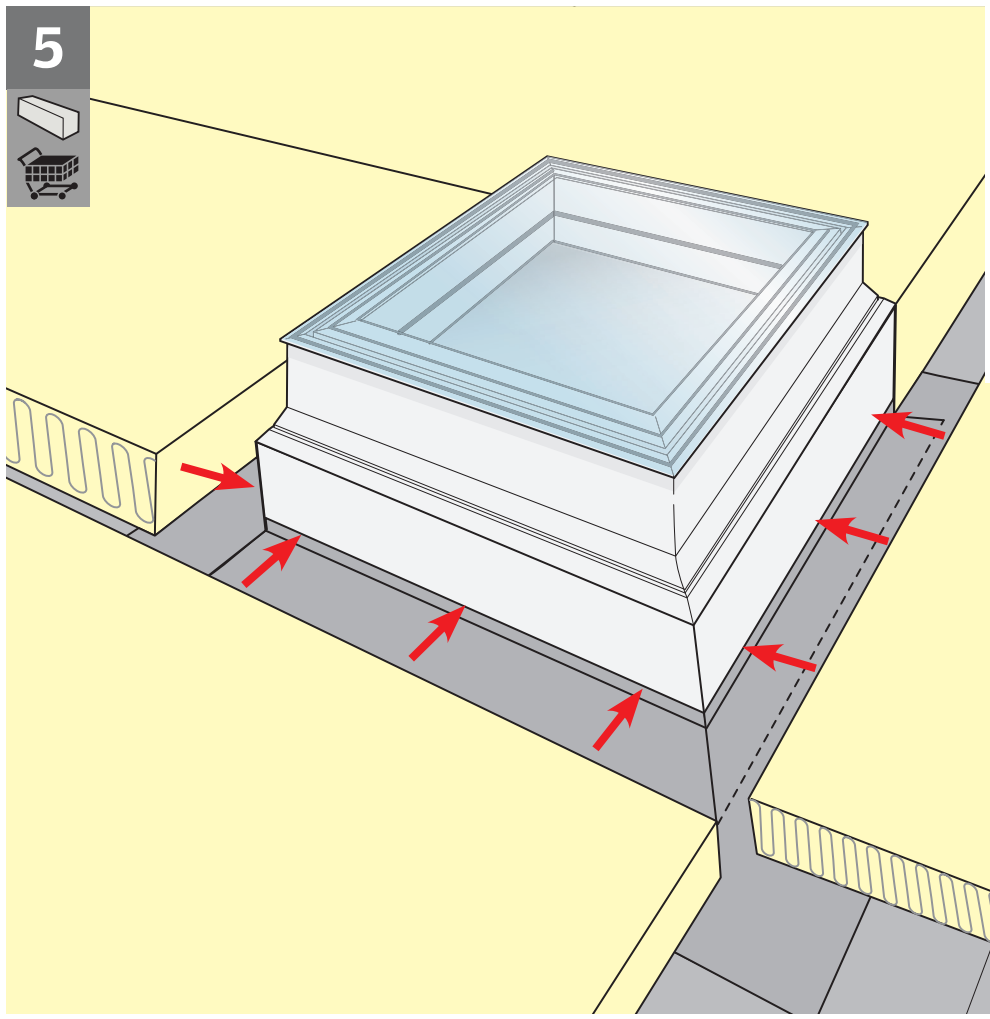

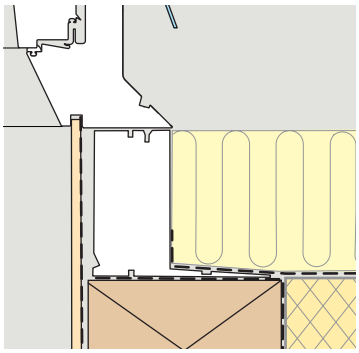

6

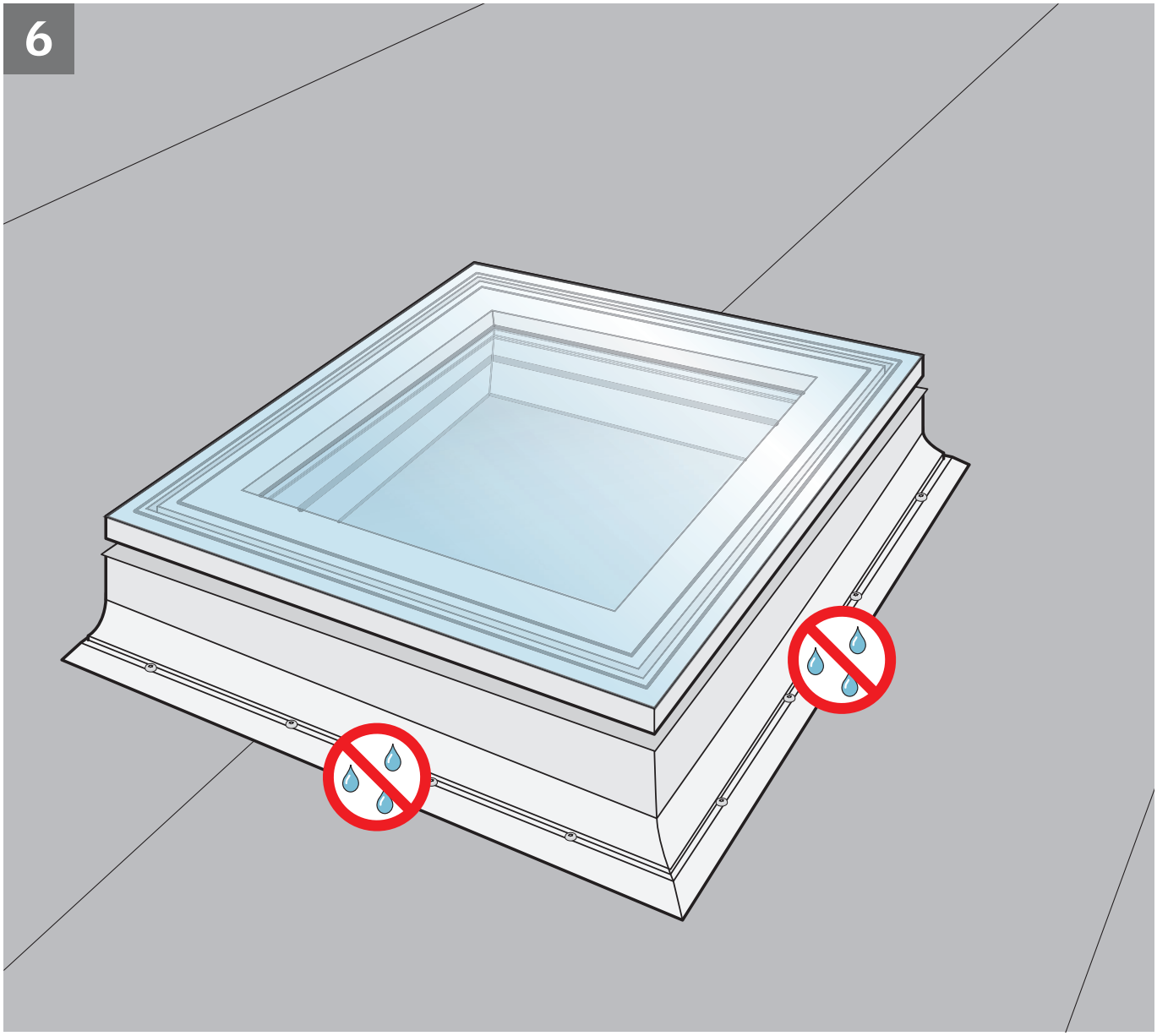

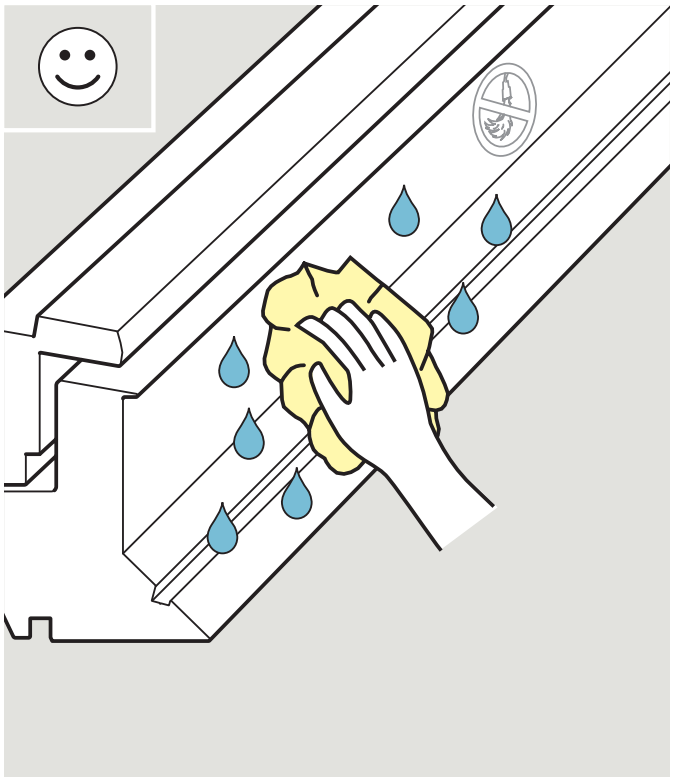

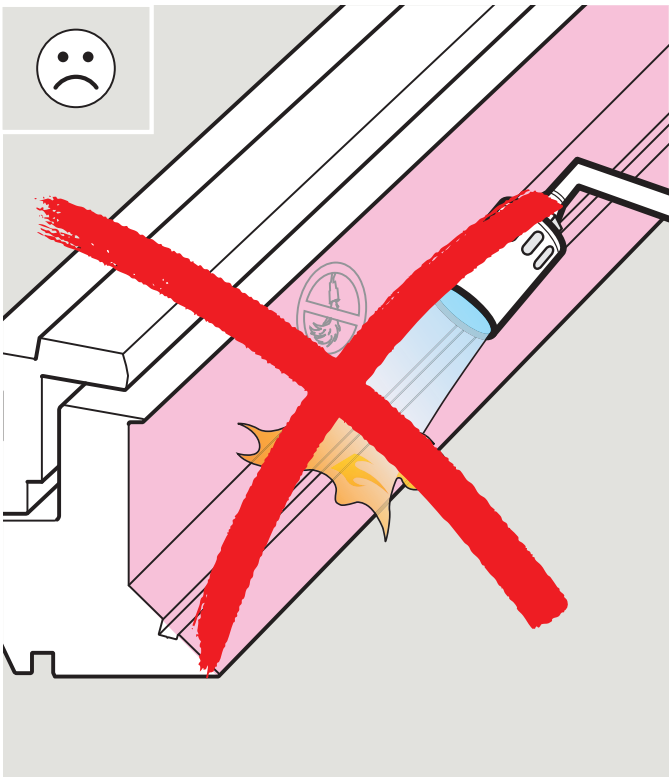

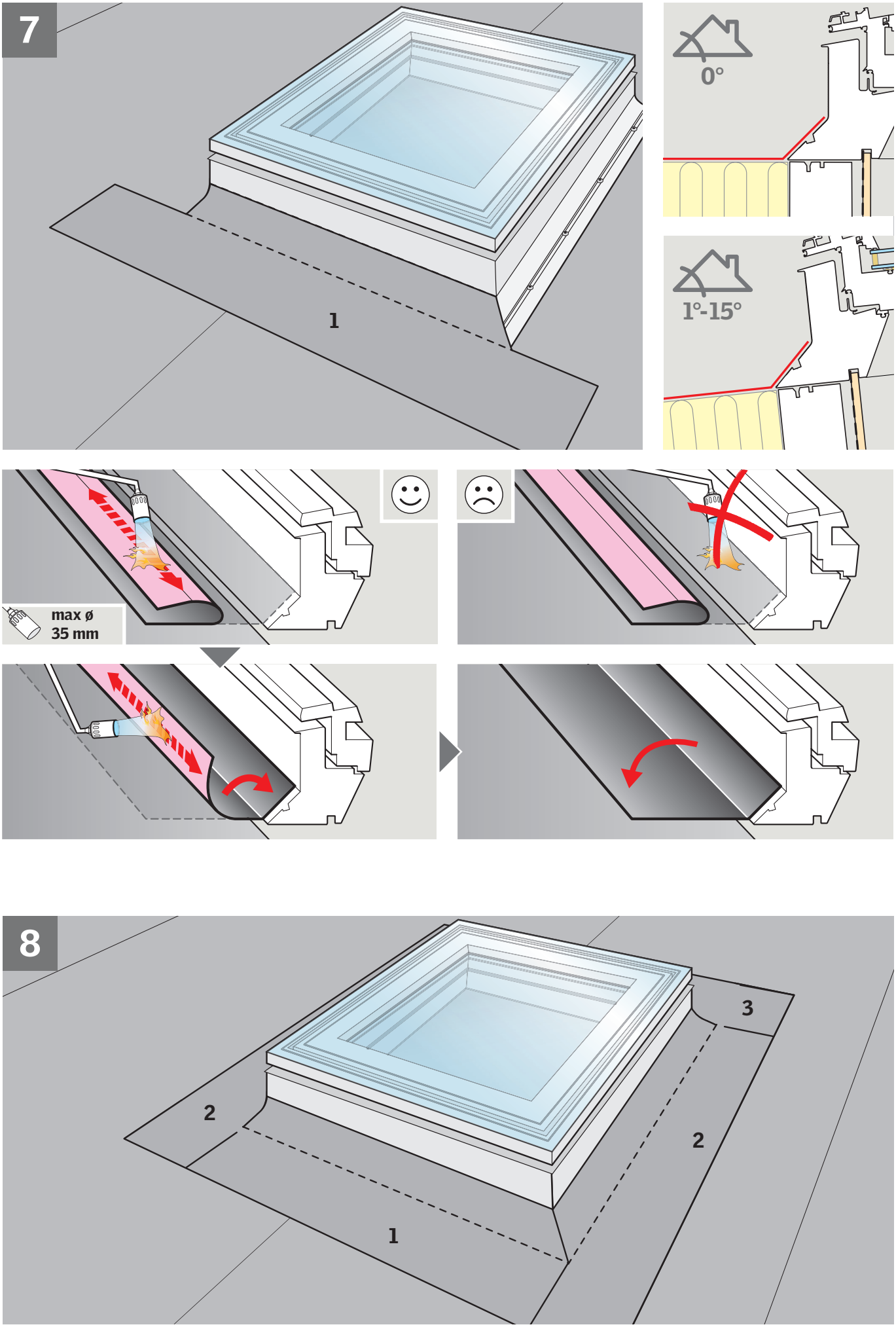
7
1
0°
1°-15°
max ø
35 mm
8
1
2
2
3

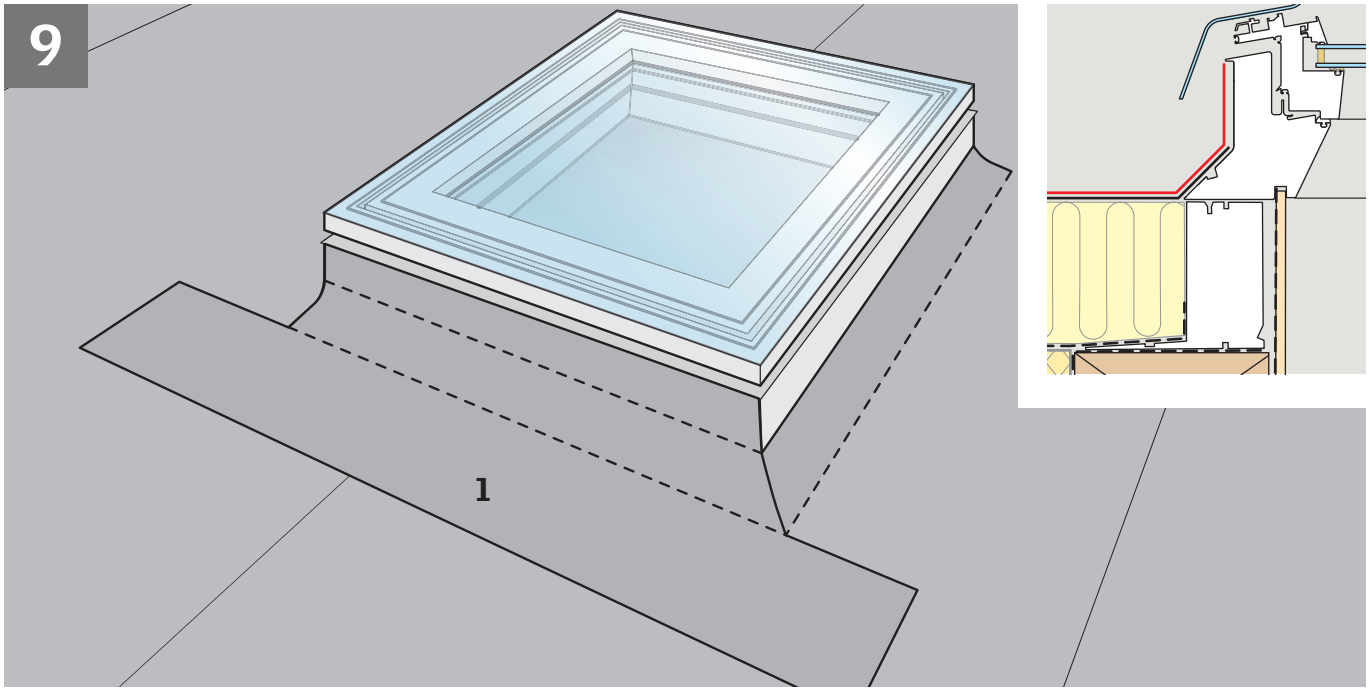
9
1

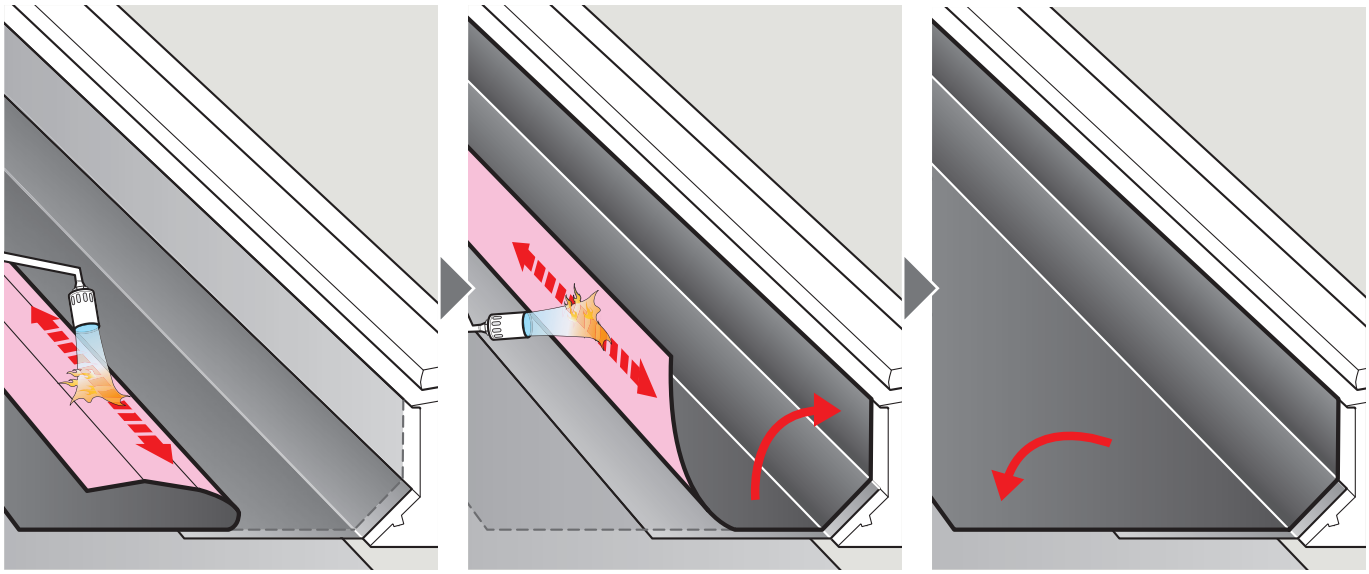

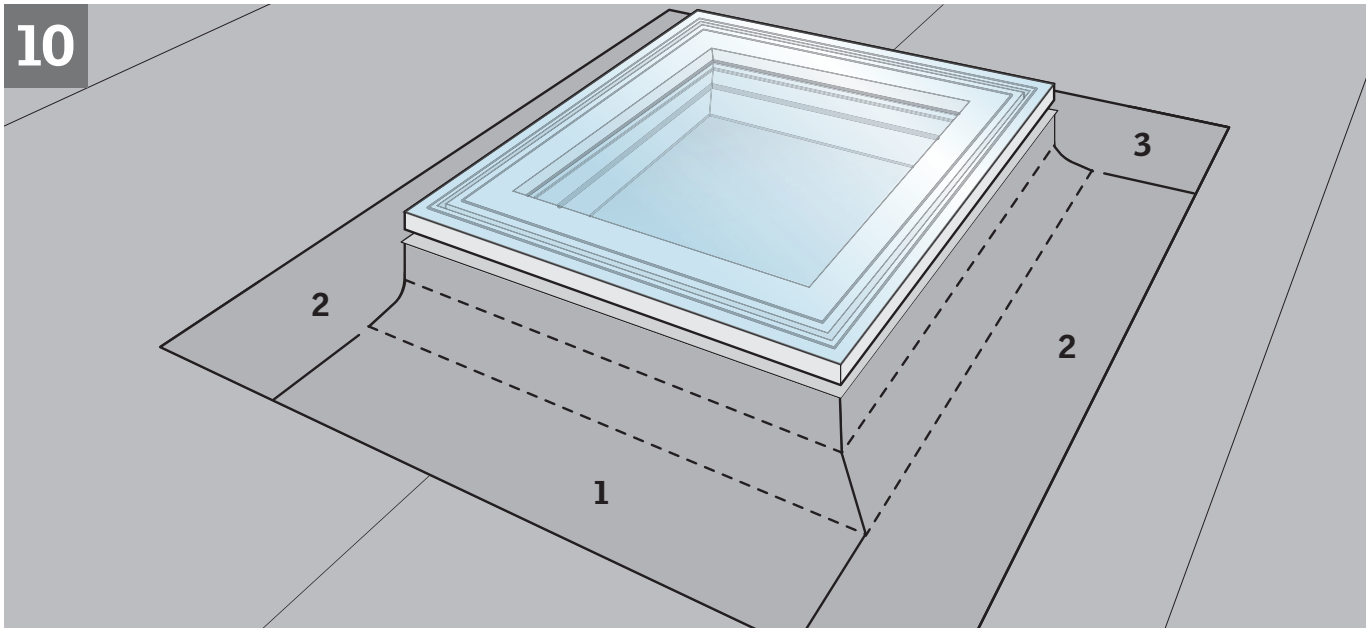
10
1
2
2
3

11

ZZZ 210

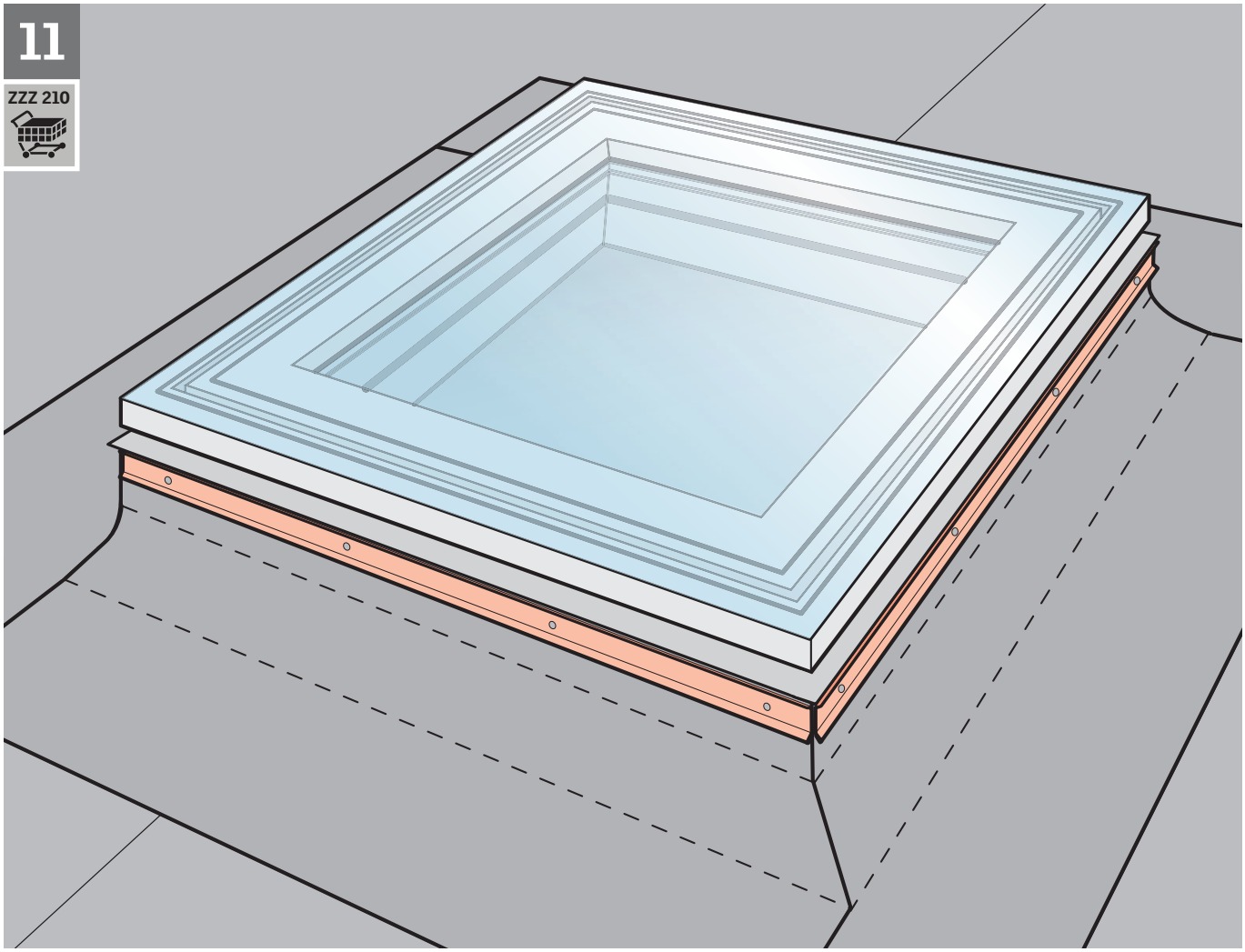

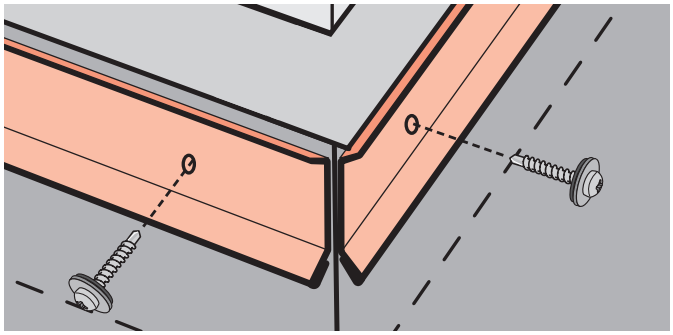

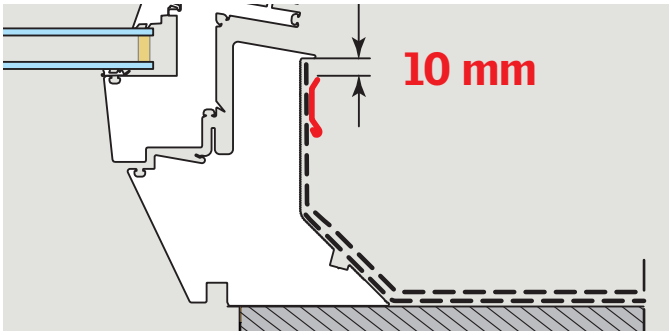

12

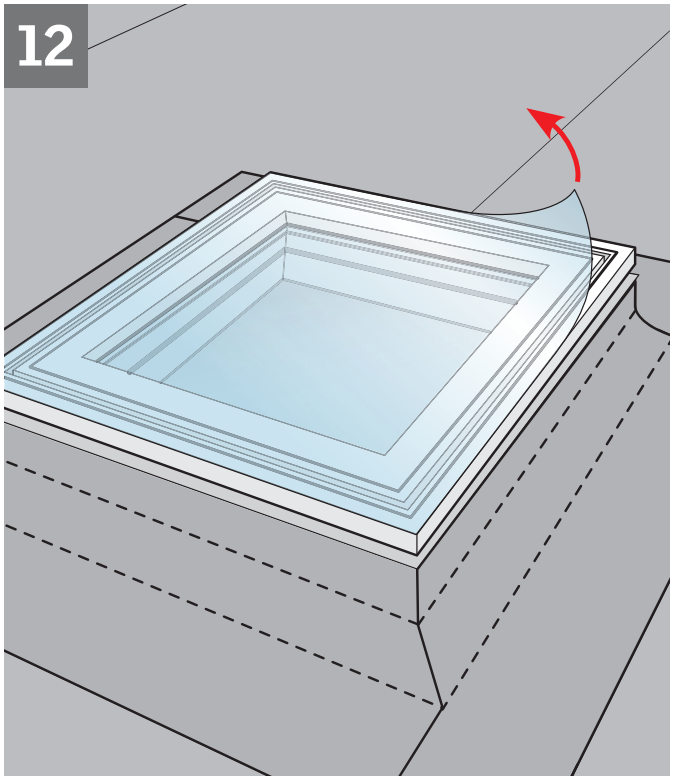

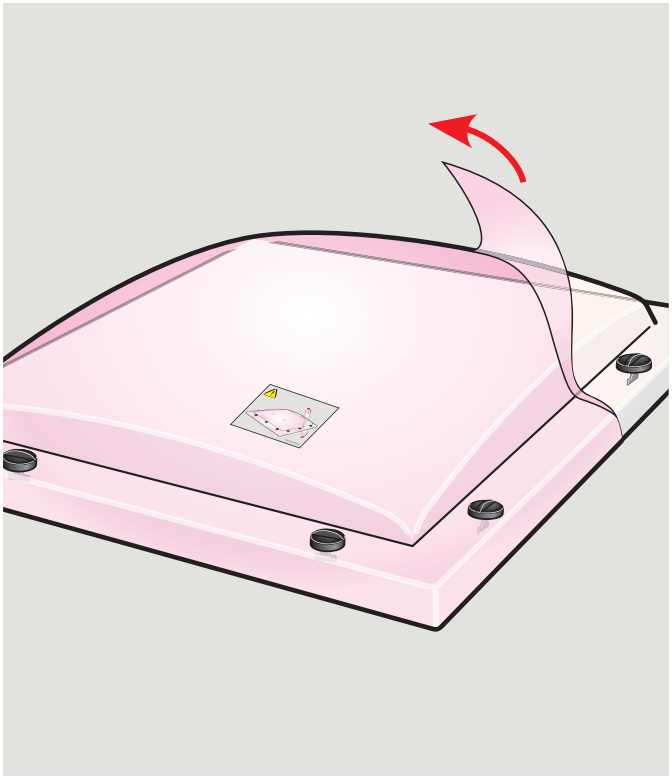

13

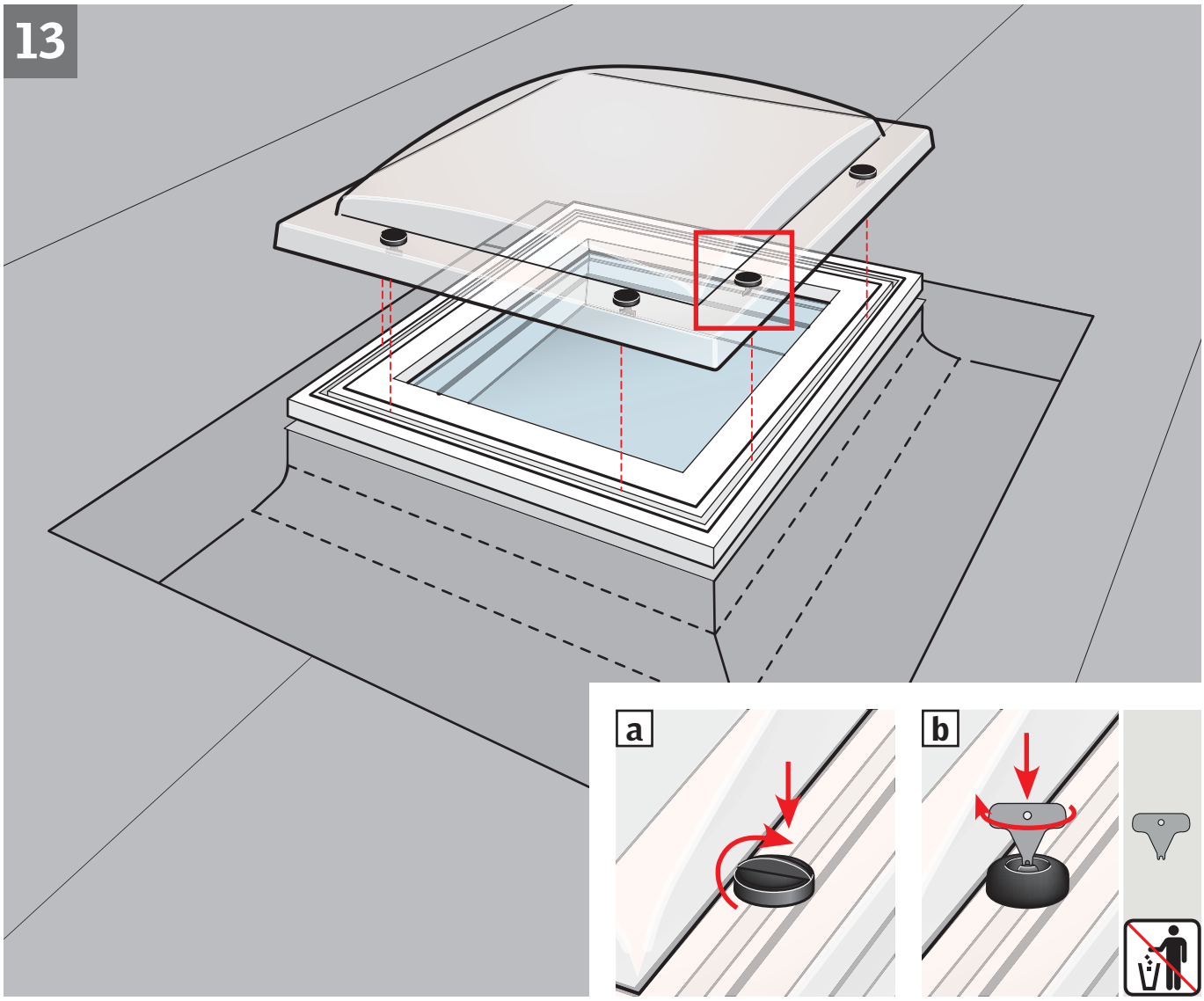

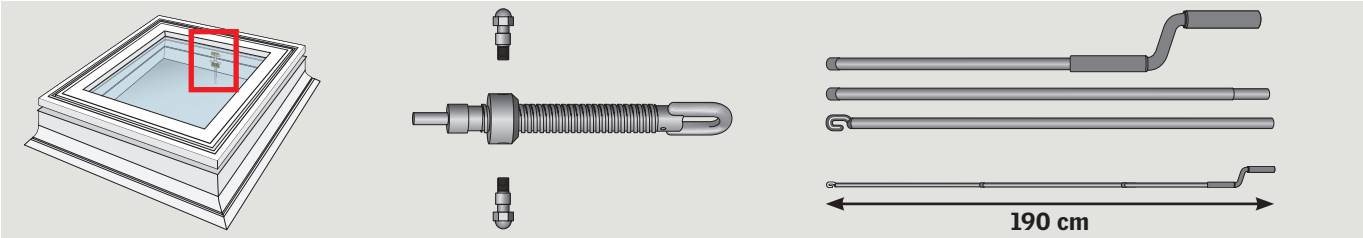
190 cm

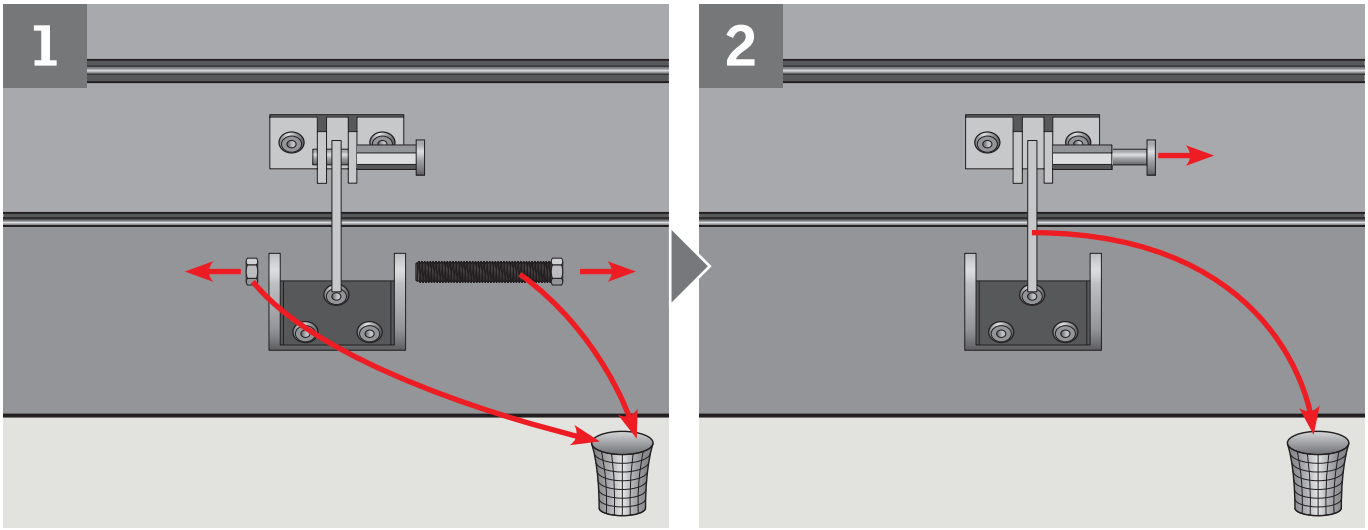
1
2

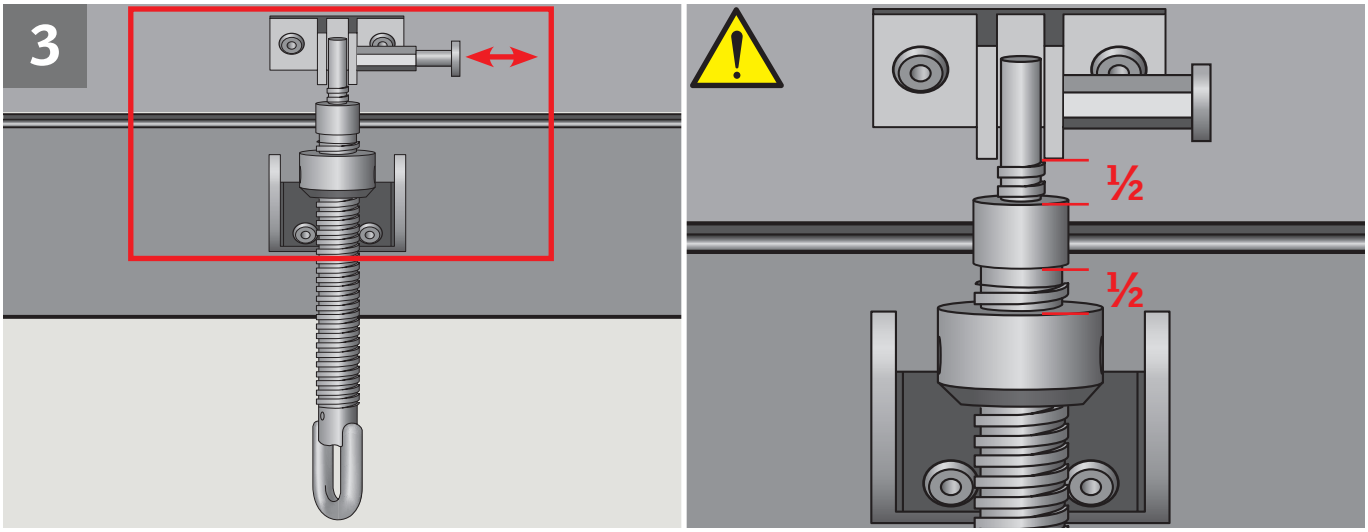
3
½
½

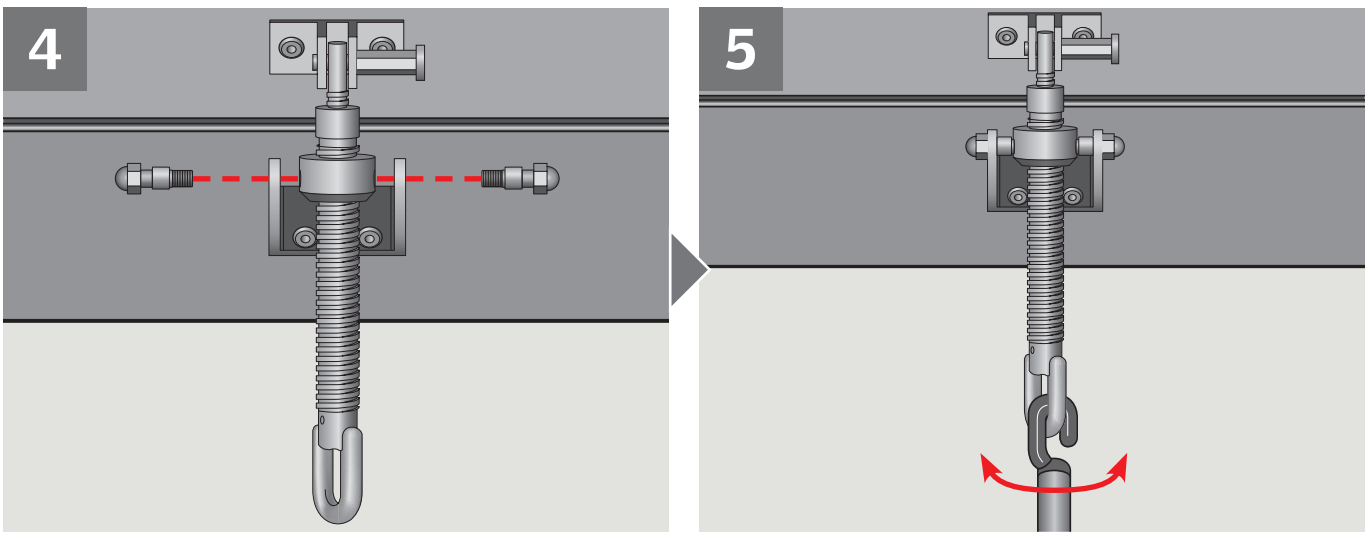
4
5

VELUX®

www.velux.com

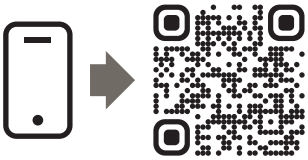

velux.com/contact

INSTALLATION INSTRUCTIONS FOR CVP+ISD/CVP+ZCE+ISD. © 2014, 2025 VELUX GROUP ®VELUX AND THE VELUX LOGO ARE REGISTERED TRADEMARKS USED UNDER LICENCE BY THE VELUX GROUP