LAI

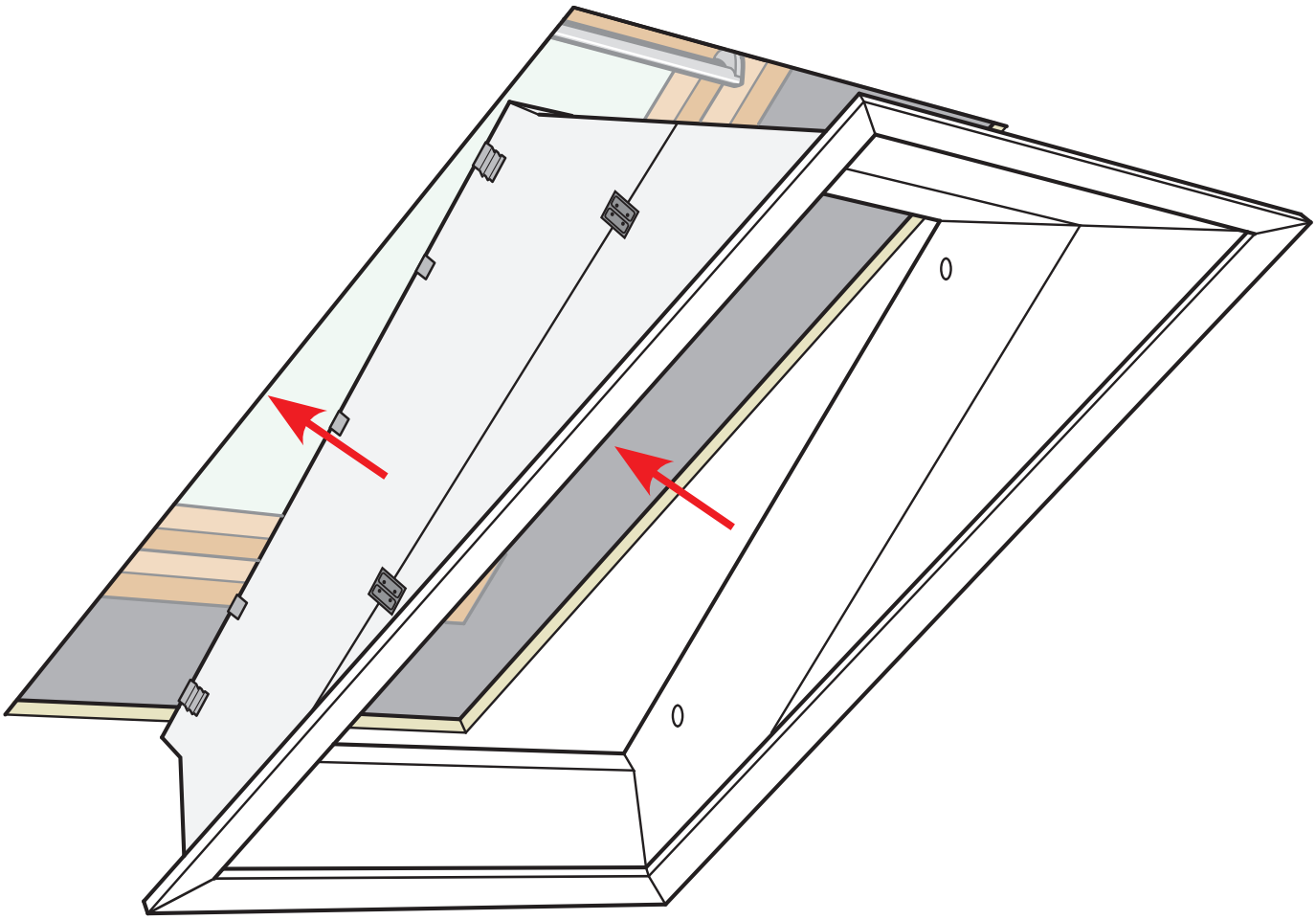

25°–50°

VAS 453431-2025-08

LSB/LSC/LSD

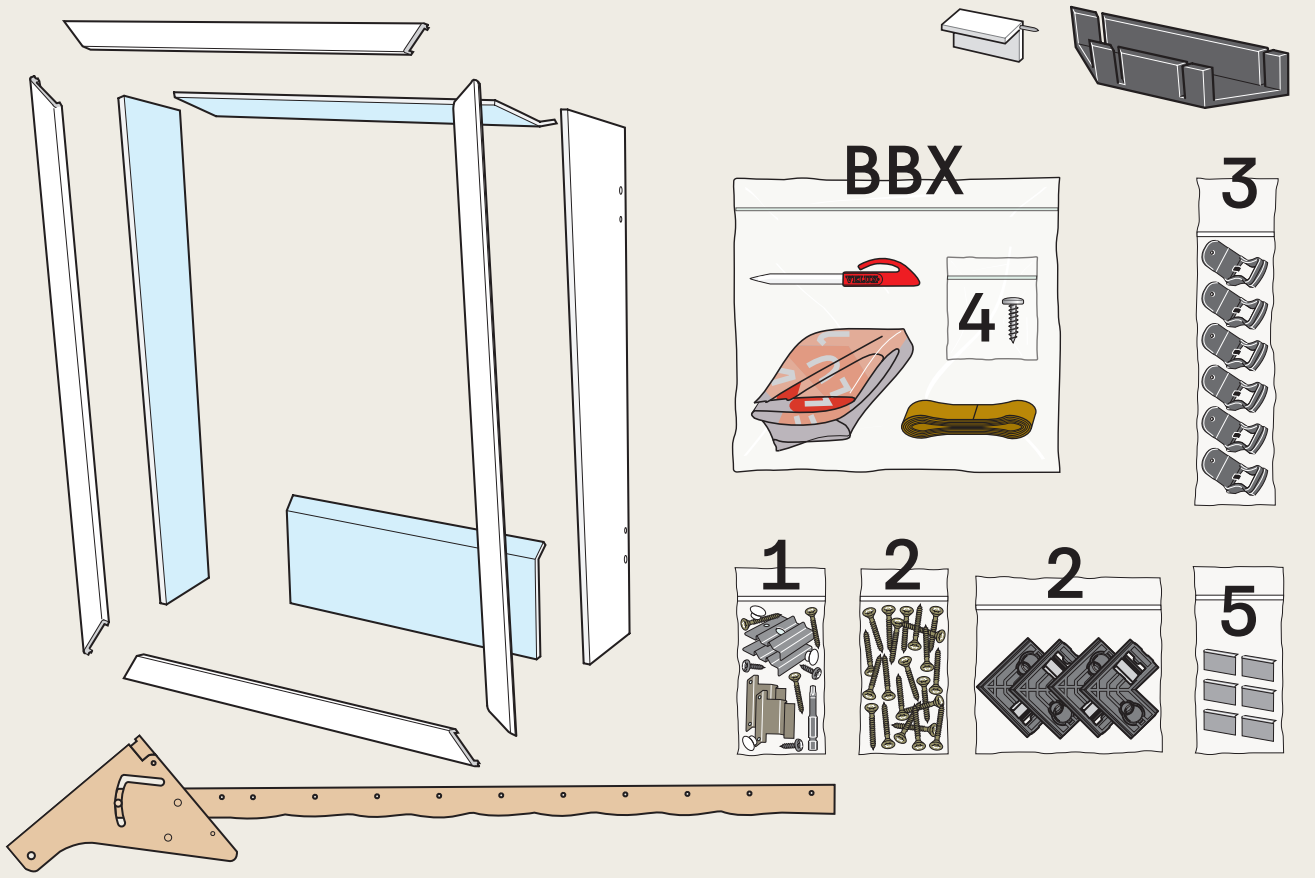

LAI

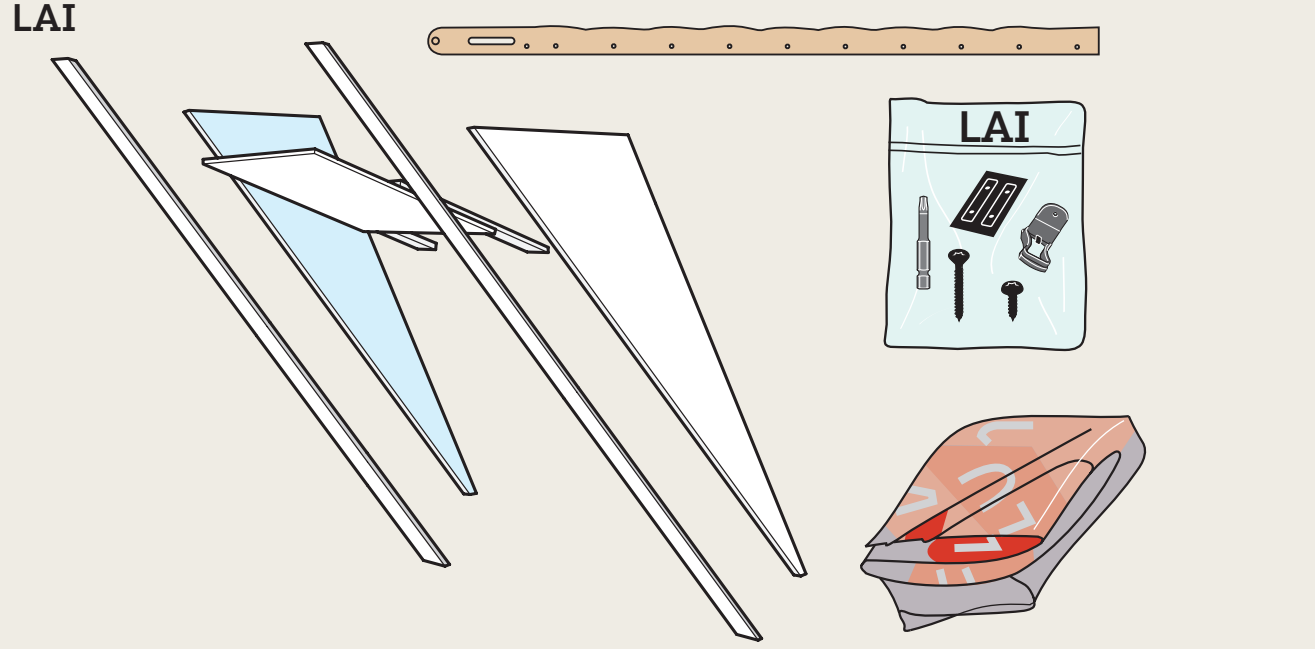

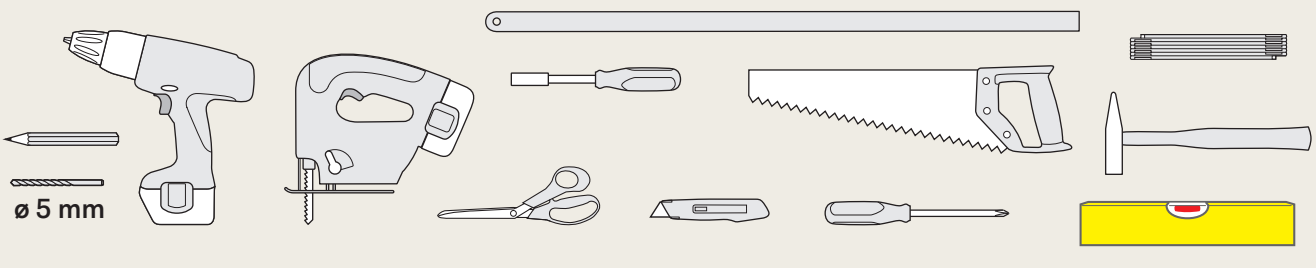

1

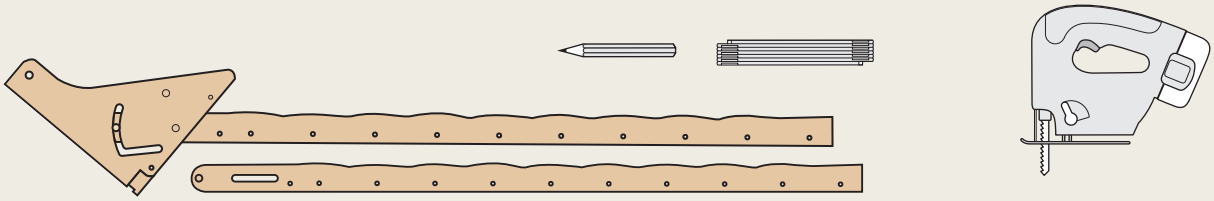

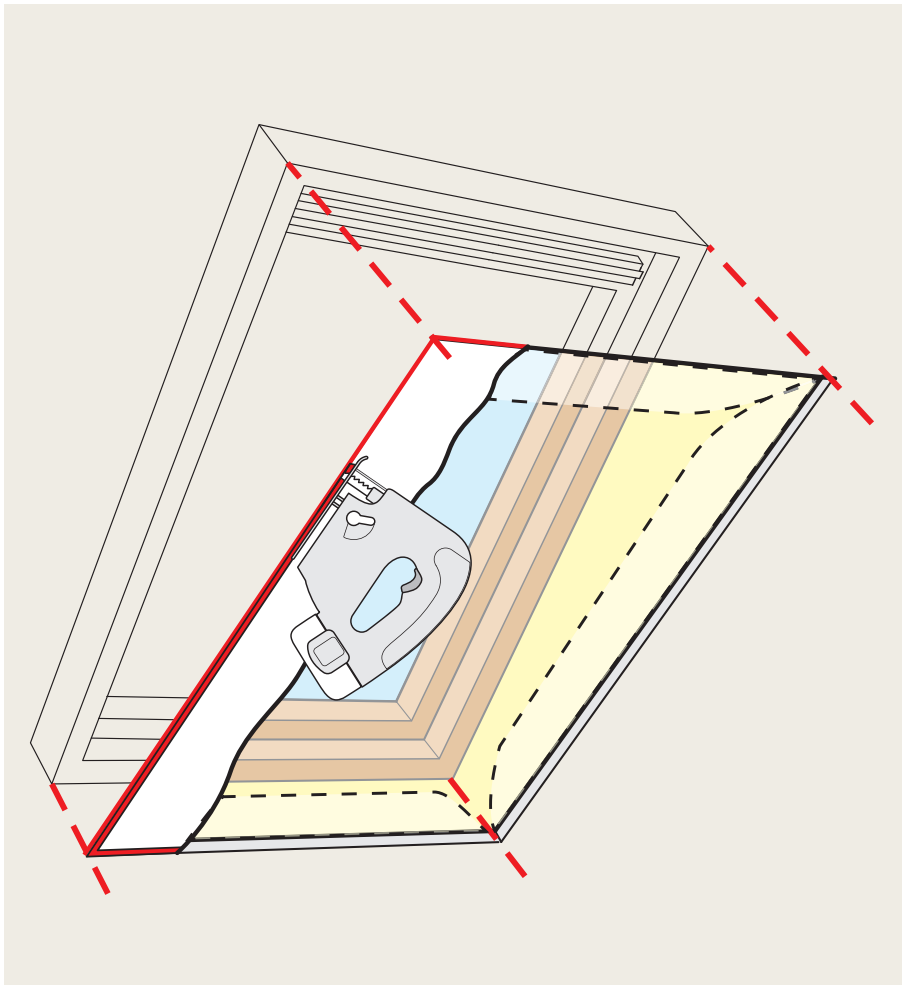

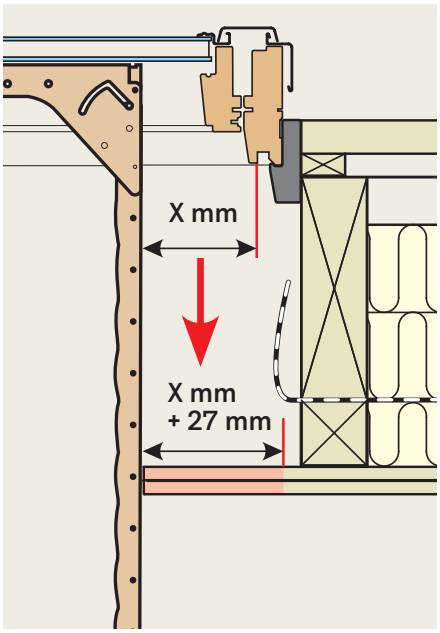

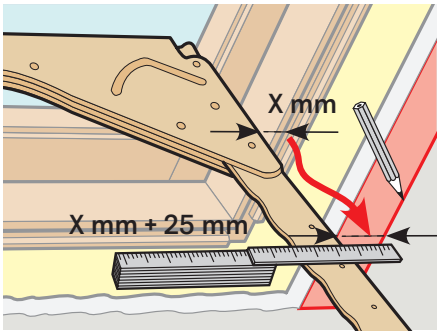

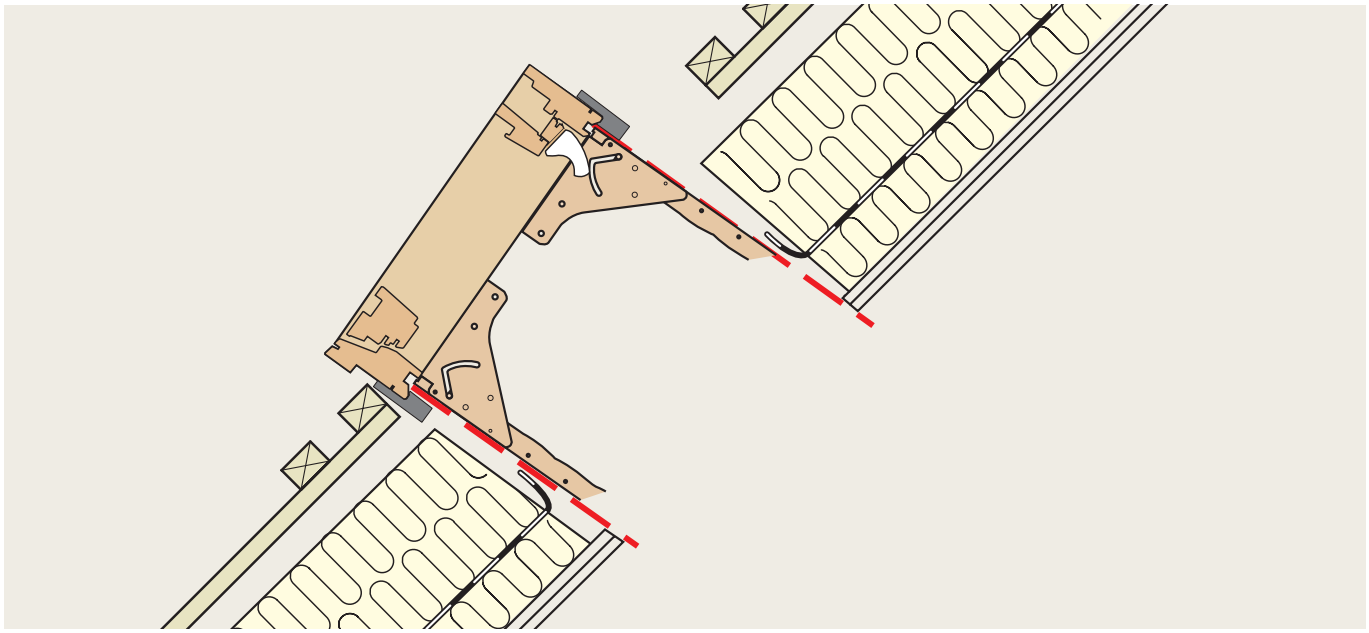

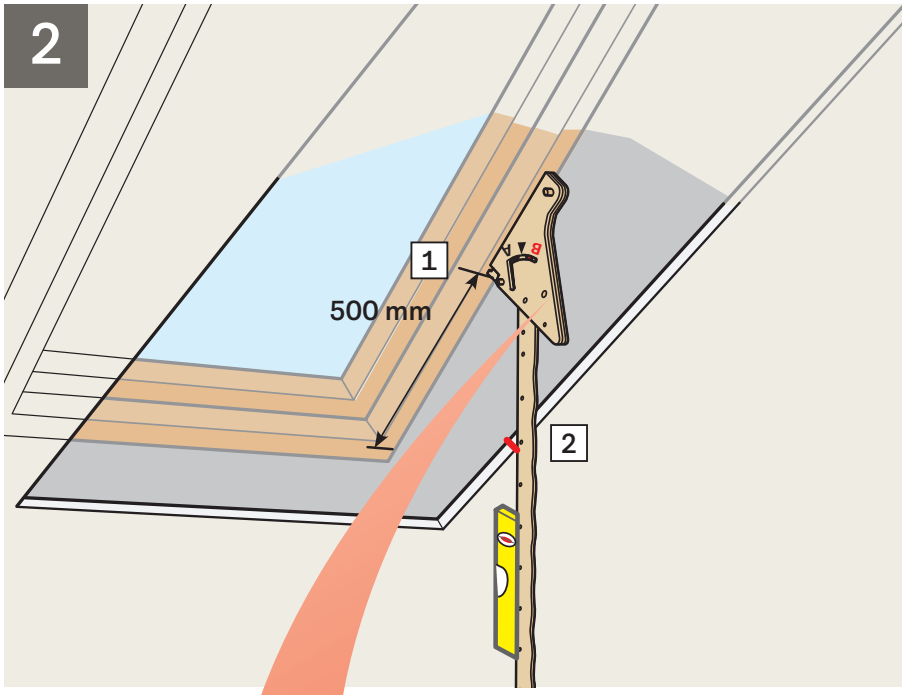
2
1
500 mm
2

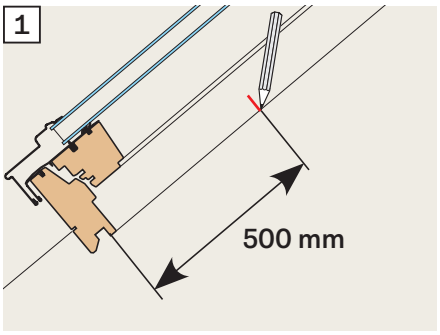
1
500 mm

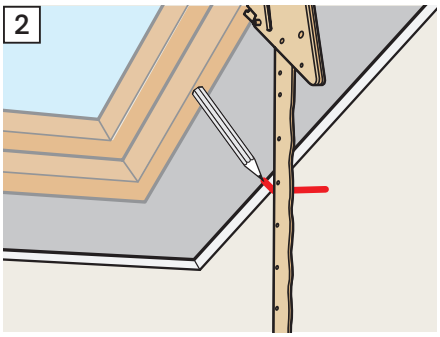
2

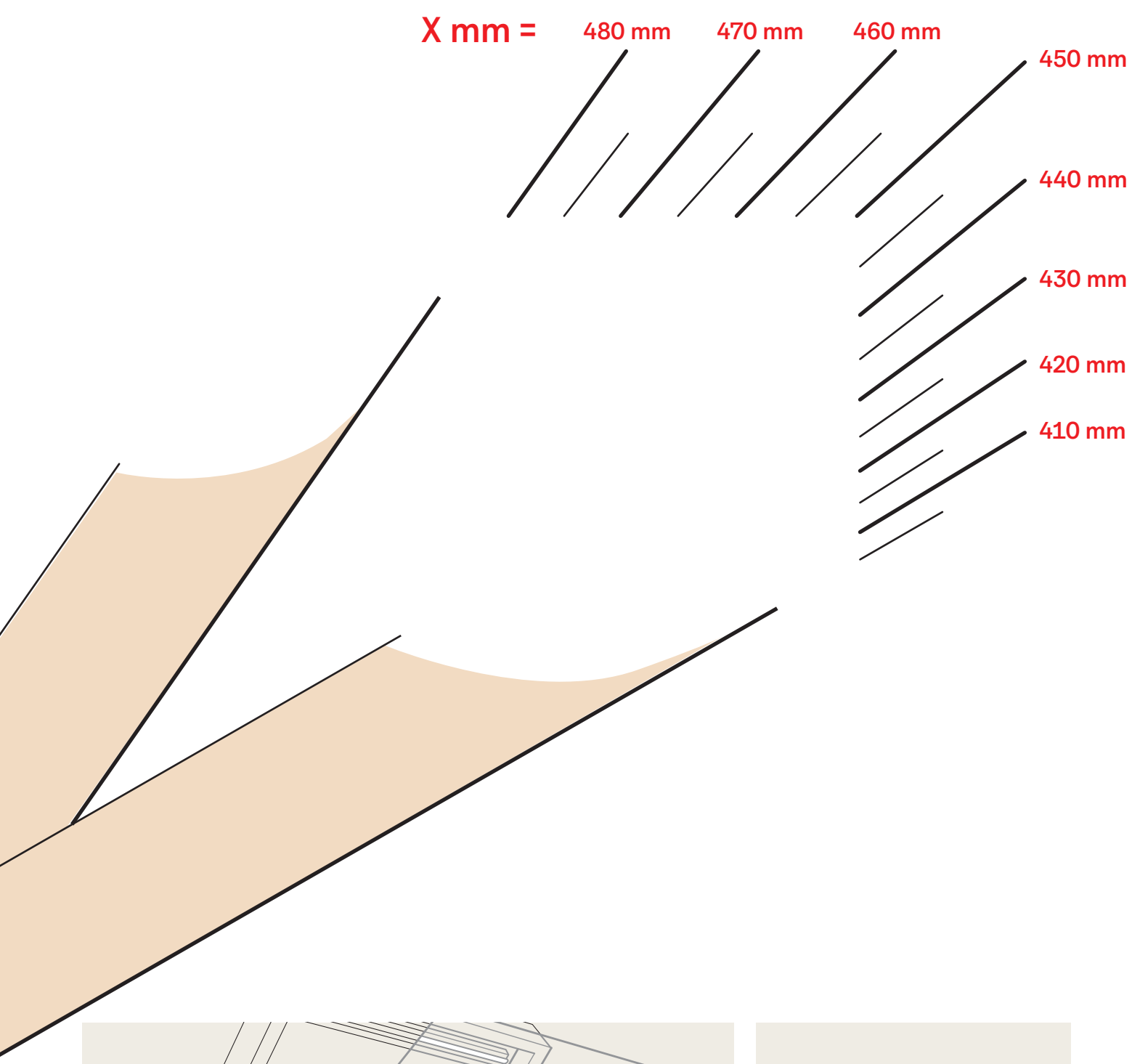
X mm =
480 mm
470 mm
460 mm
450 mm
440 mm
430 mm
420 mm
410 mm

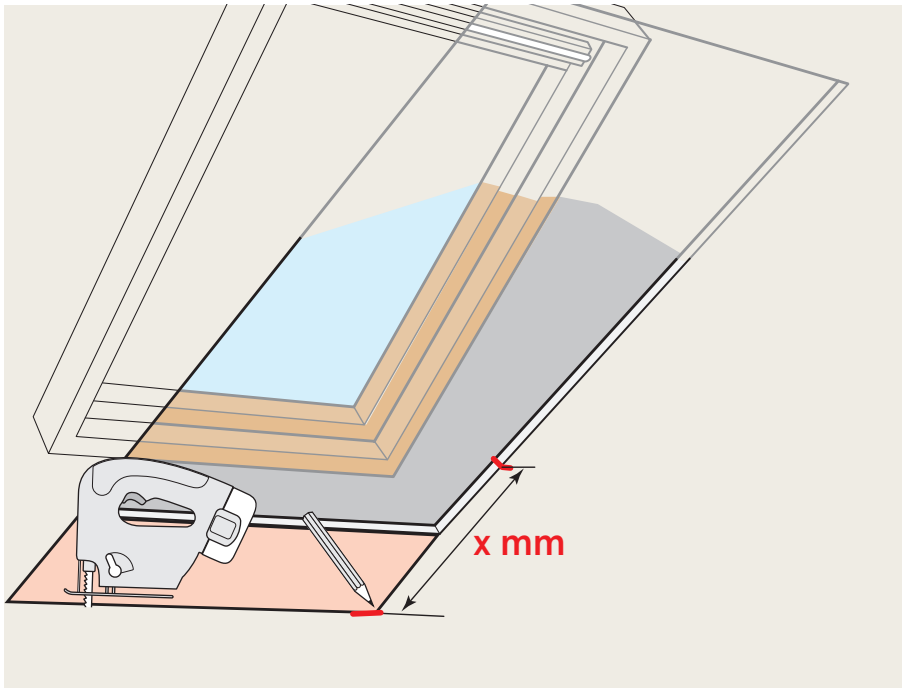
x mm

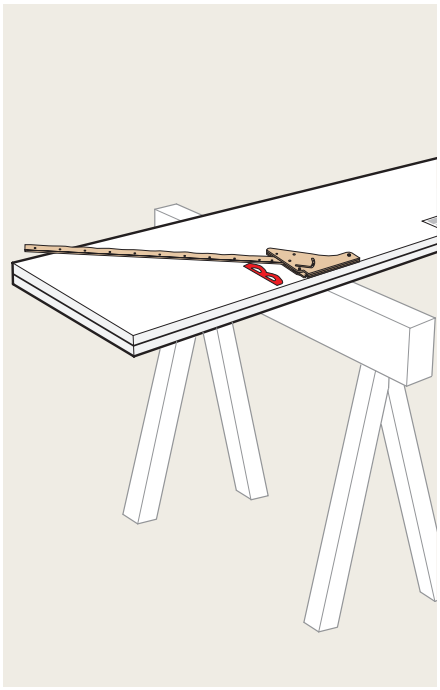

3

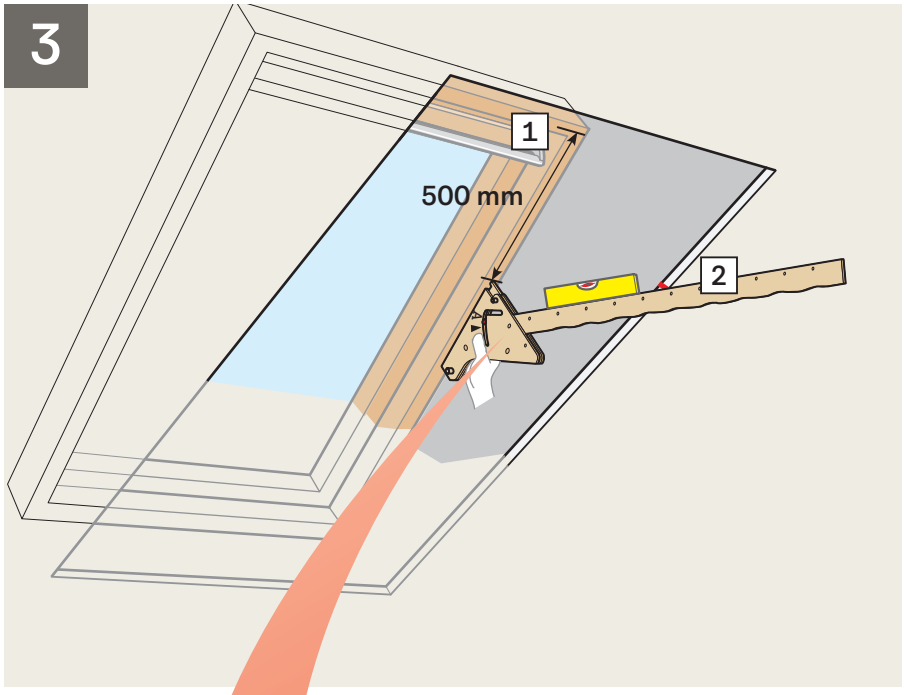

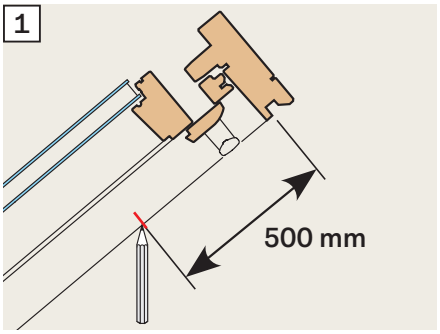

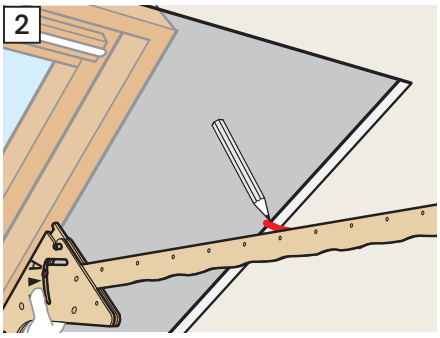

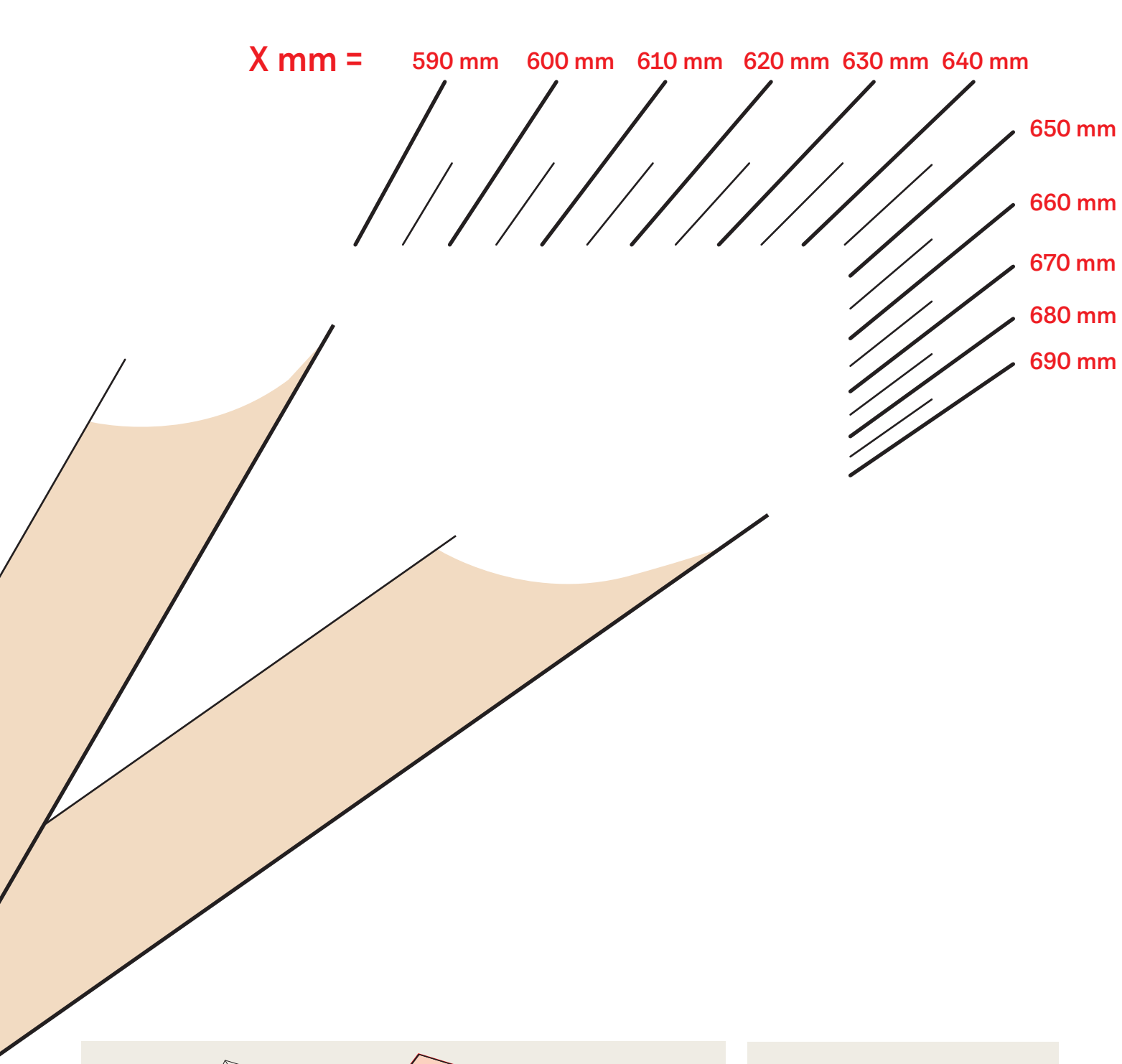
X mm =
590 mm
600 mm
610 mm
620 mm
630 mm
640 mm
650 mm
660 mm
670 mm
680 mm
690 mm

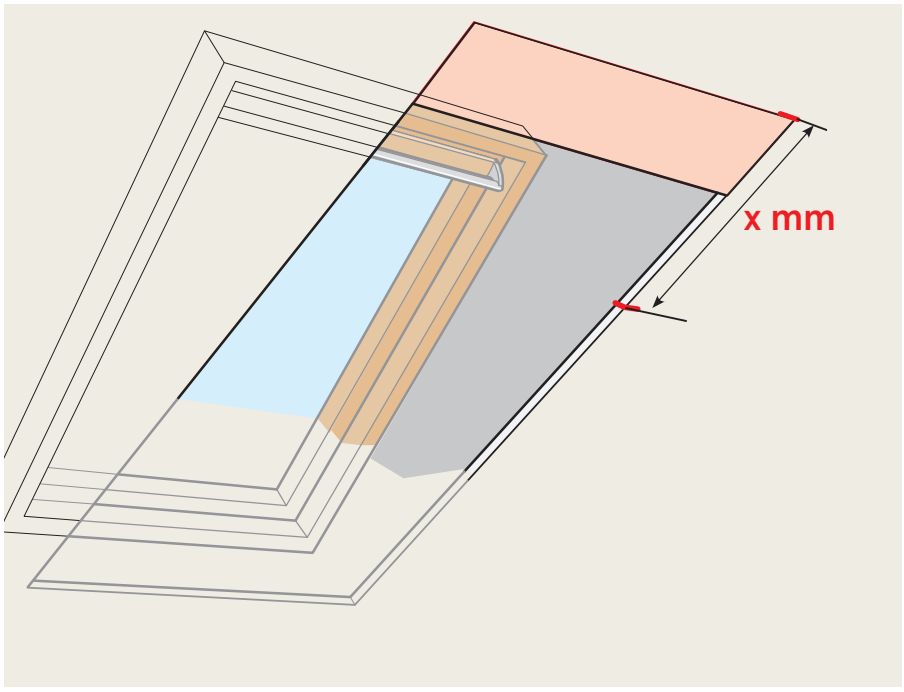
x mm

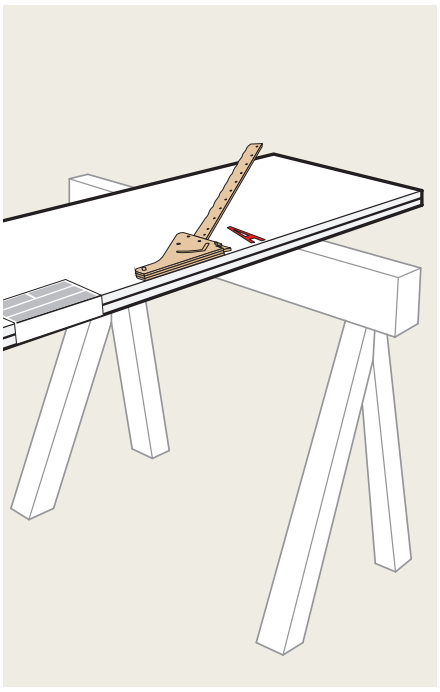

4

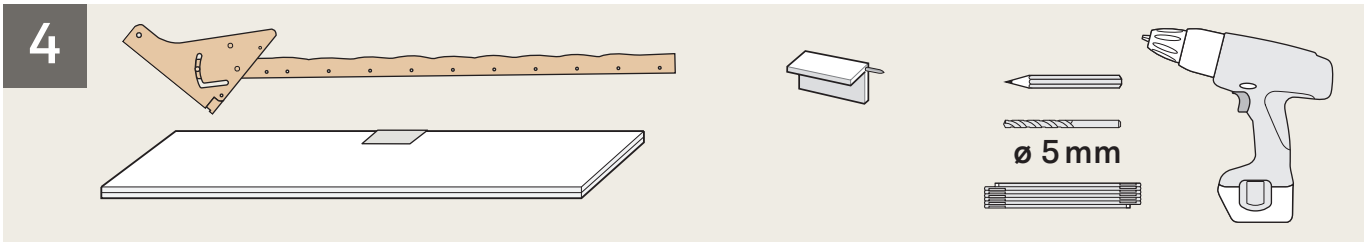

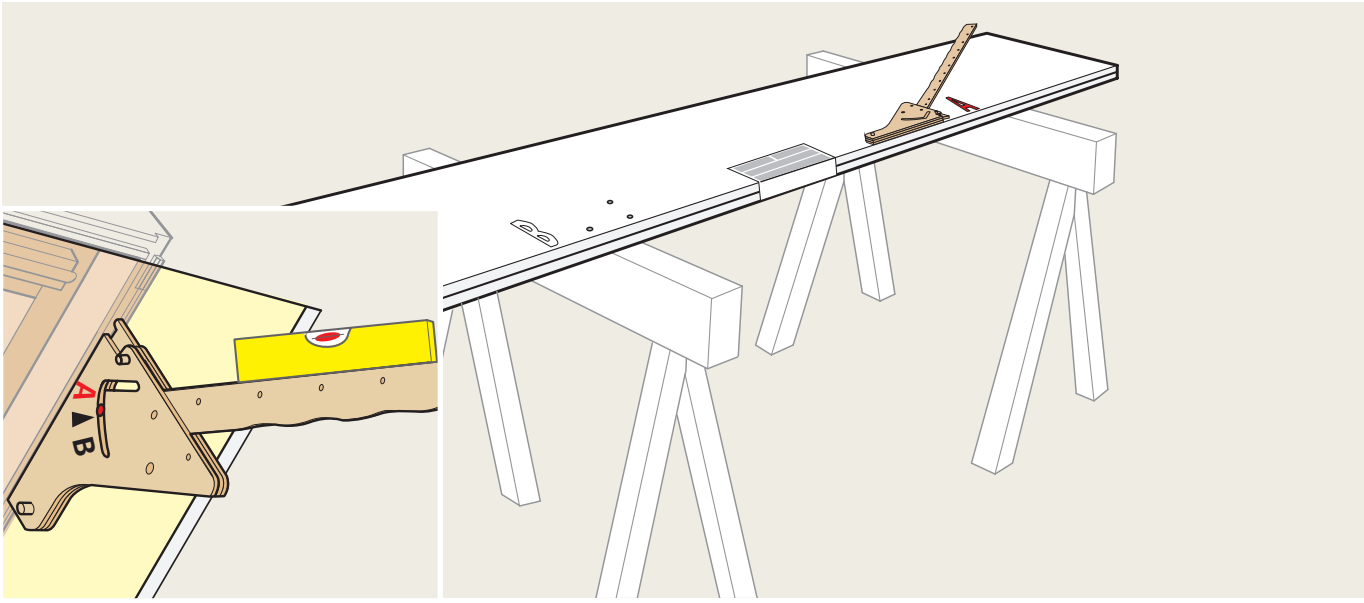

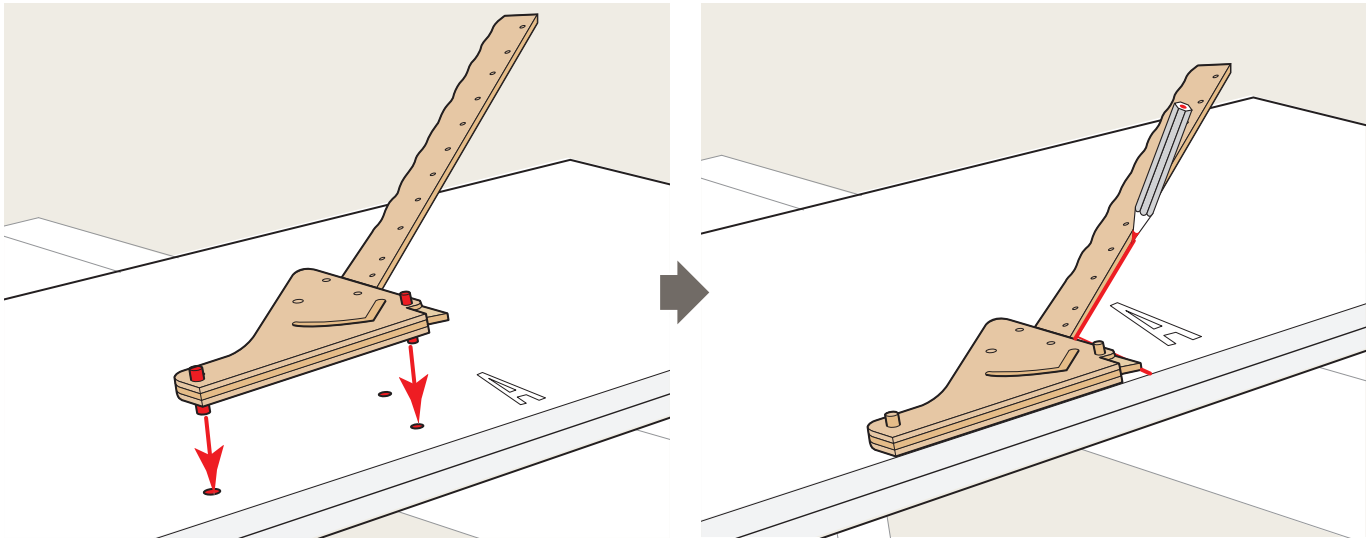

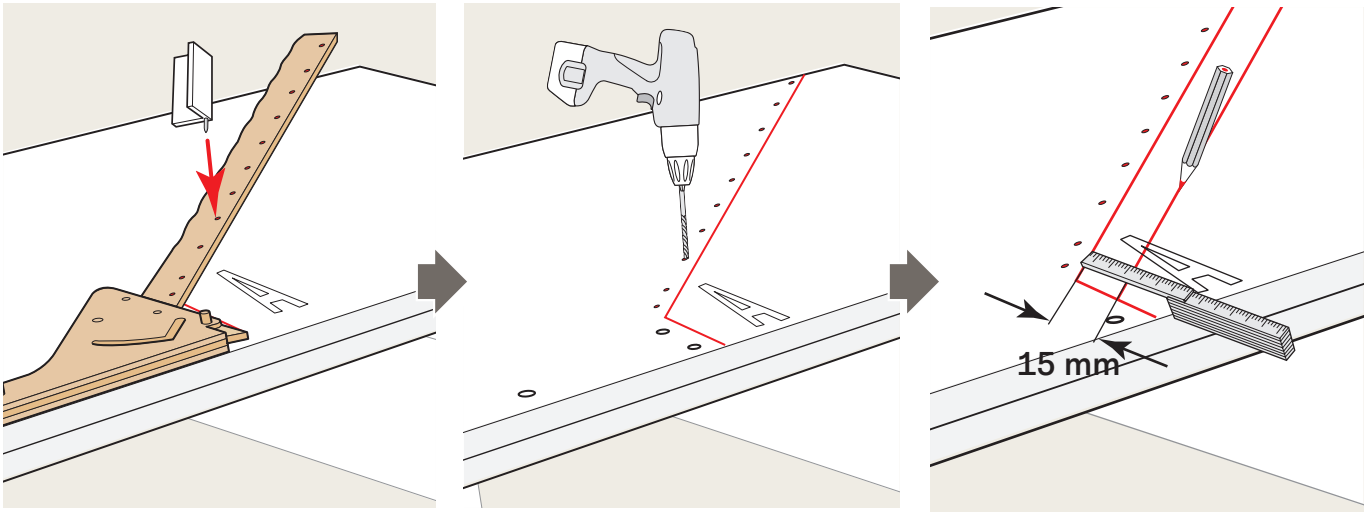

5

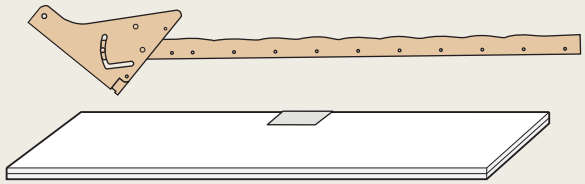

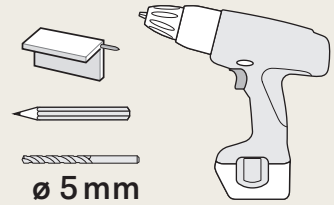

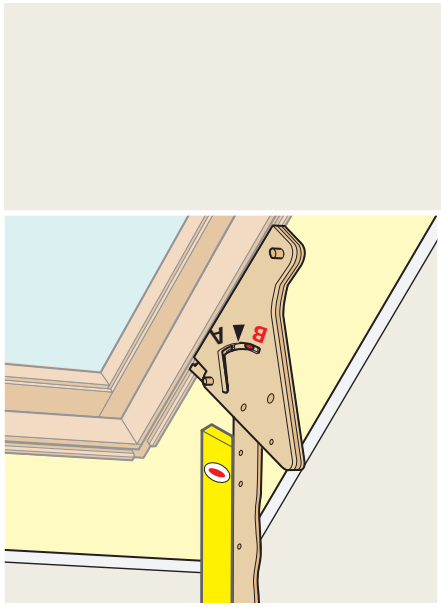

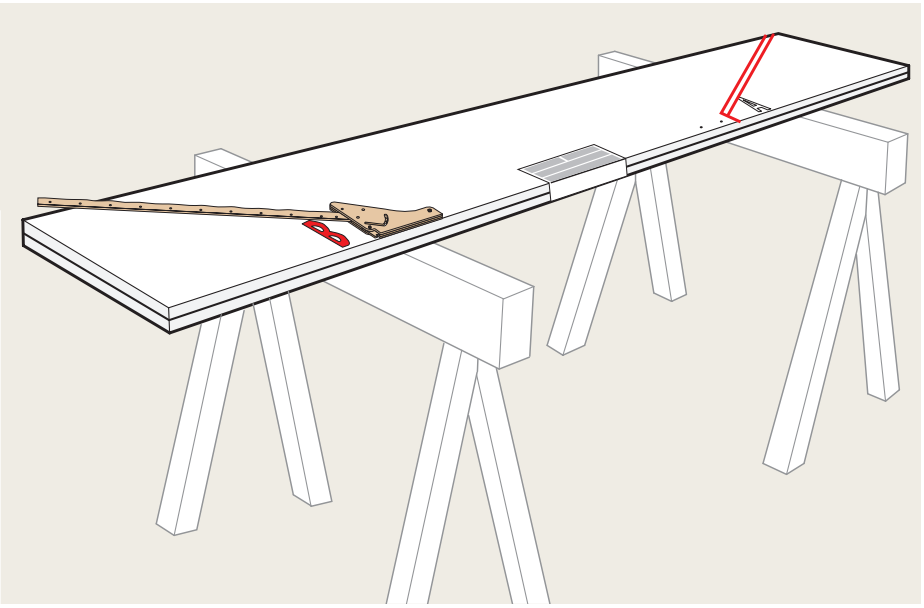

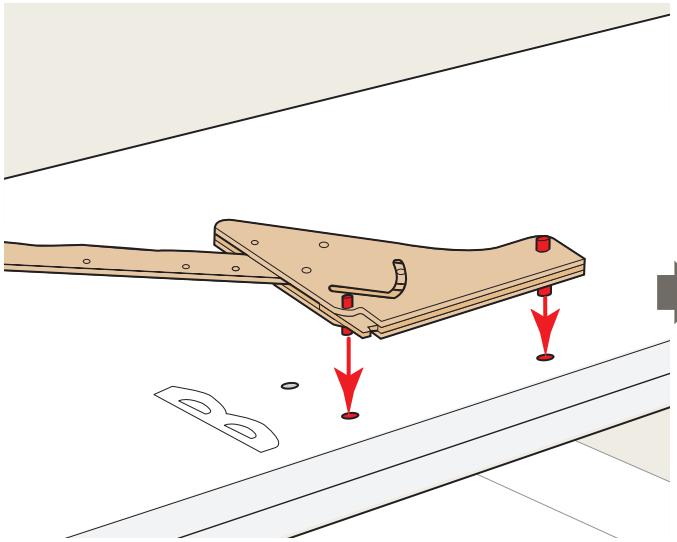

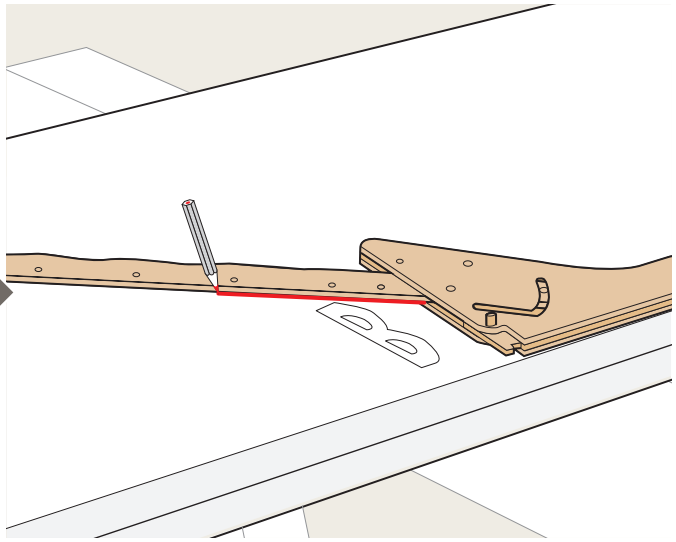

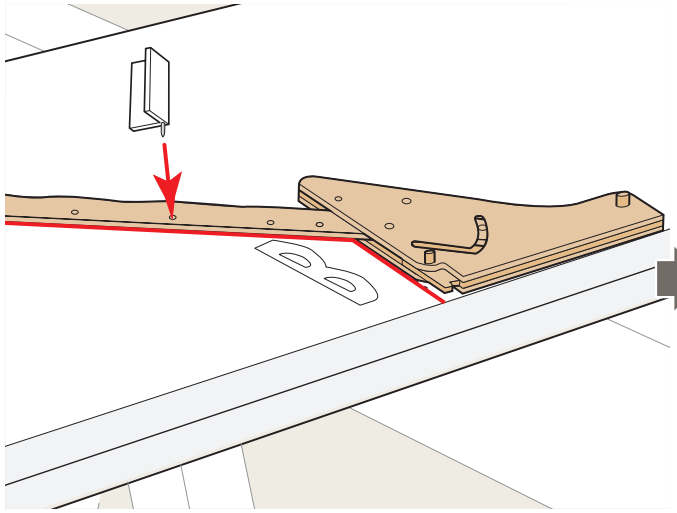

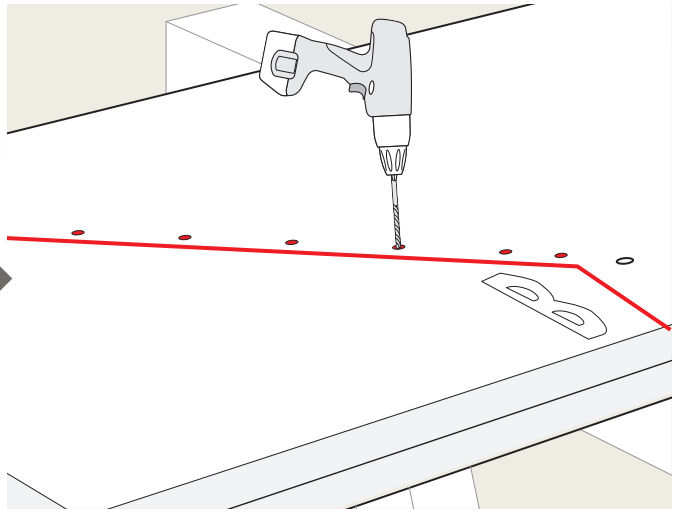

6

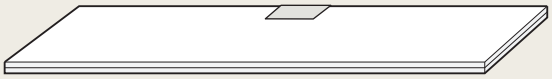

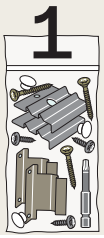

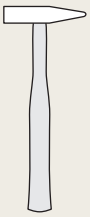

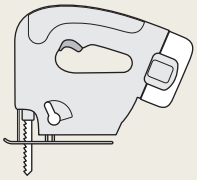

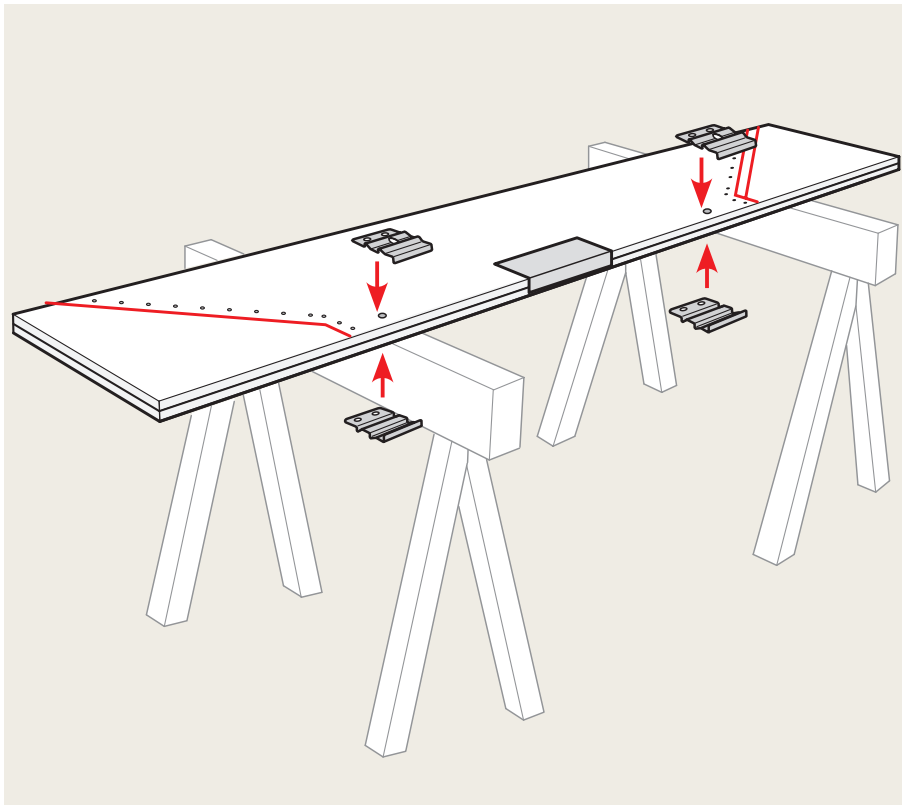

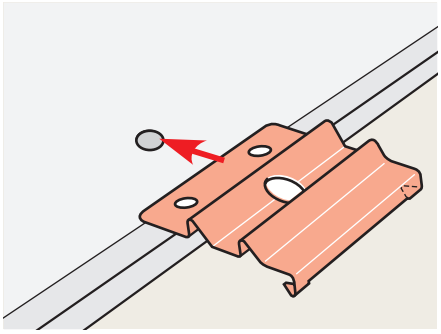

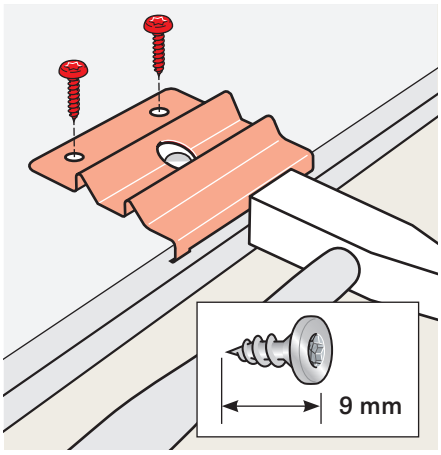

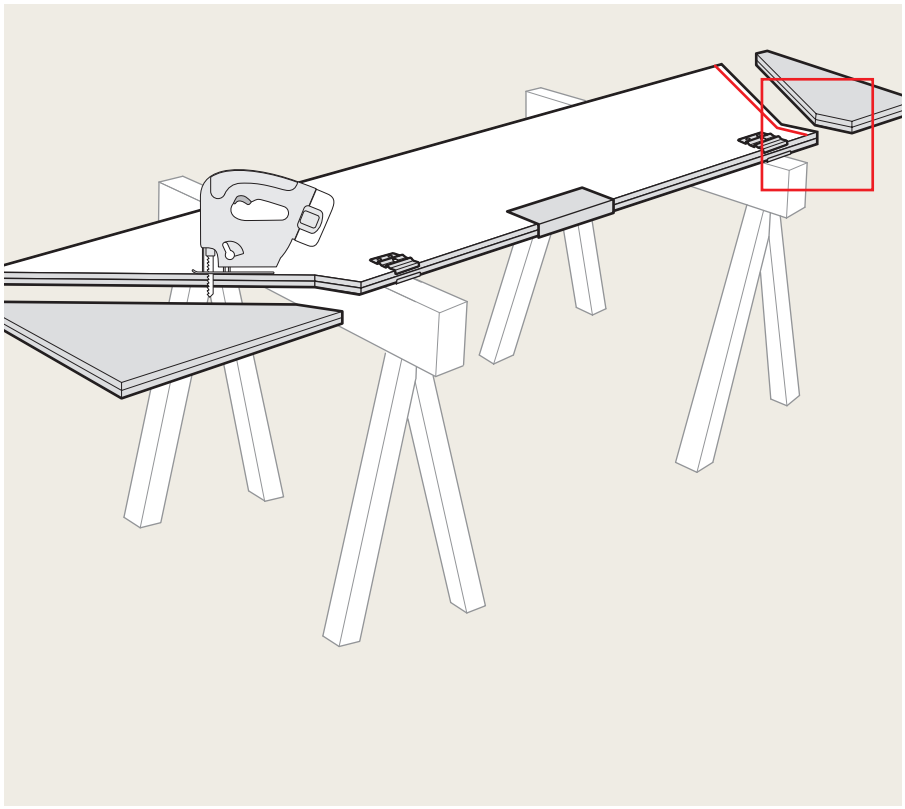

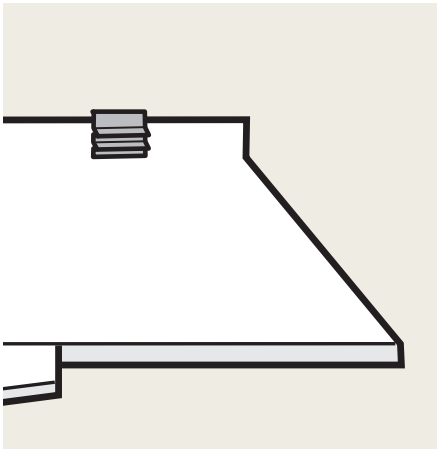

7

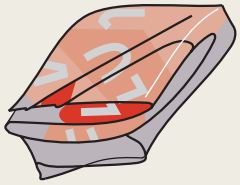



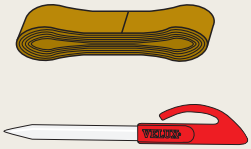

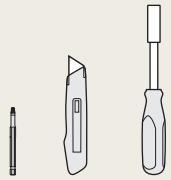

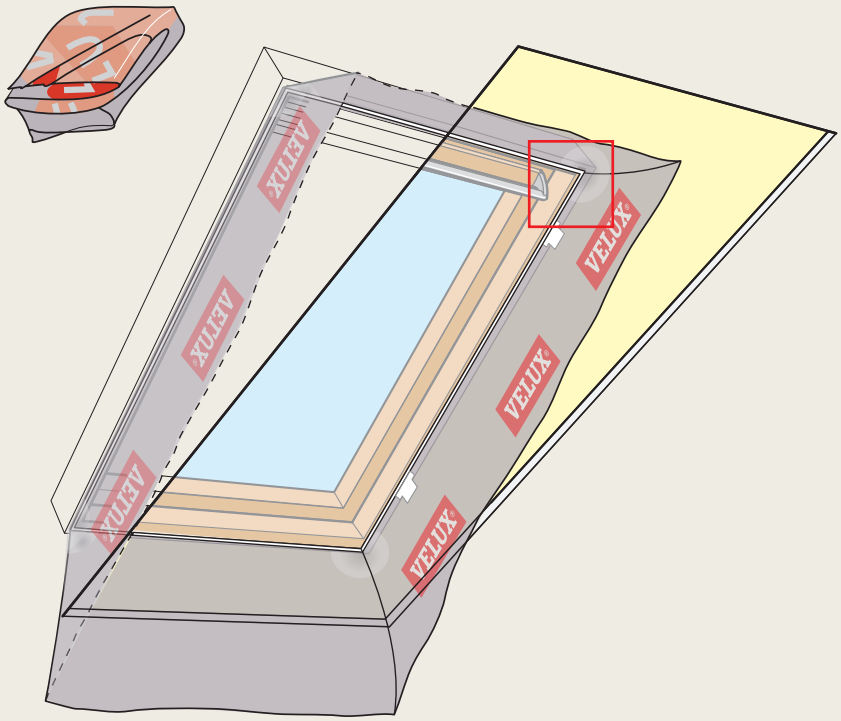

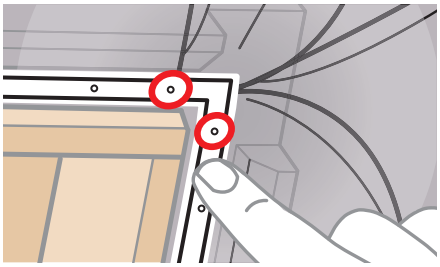

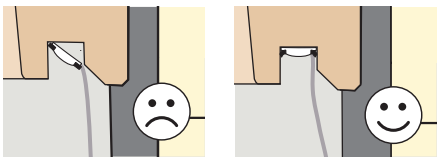

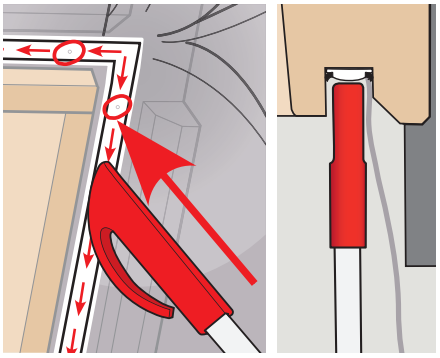

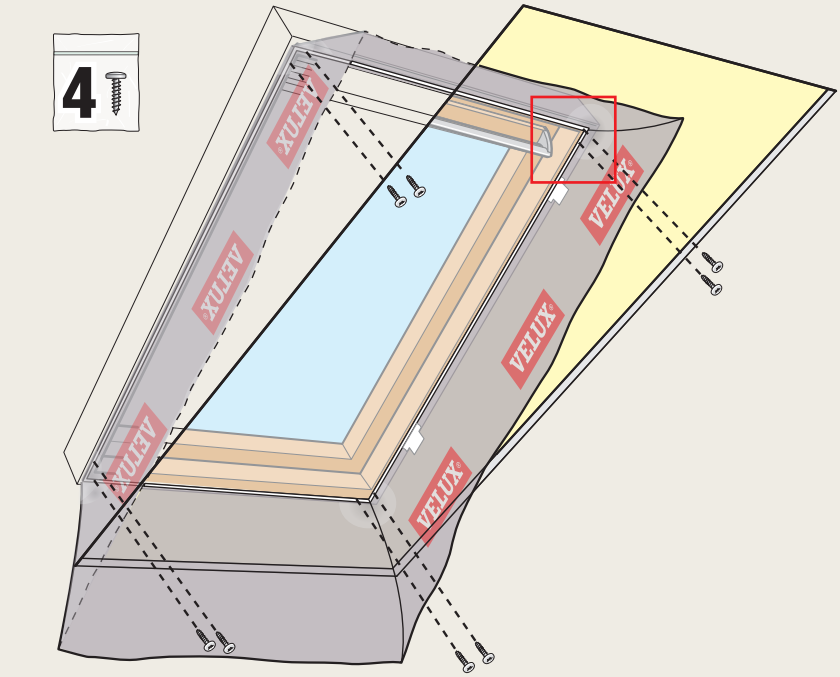

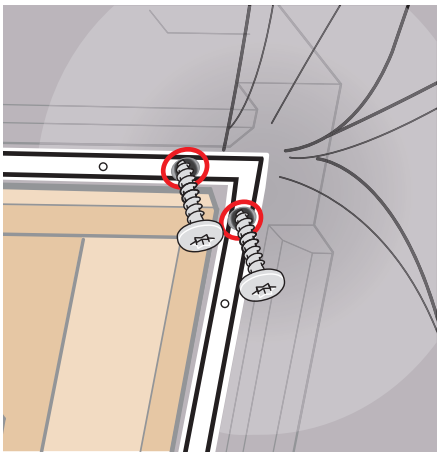

8

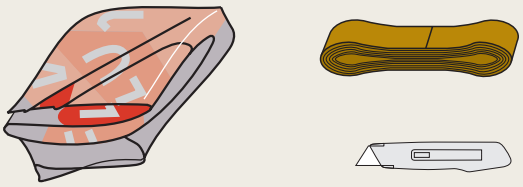

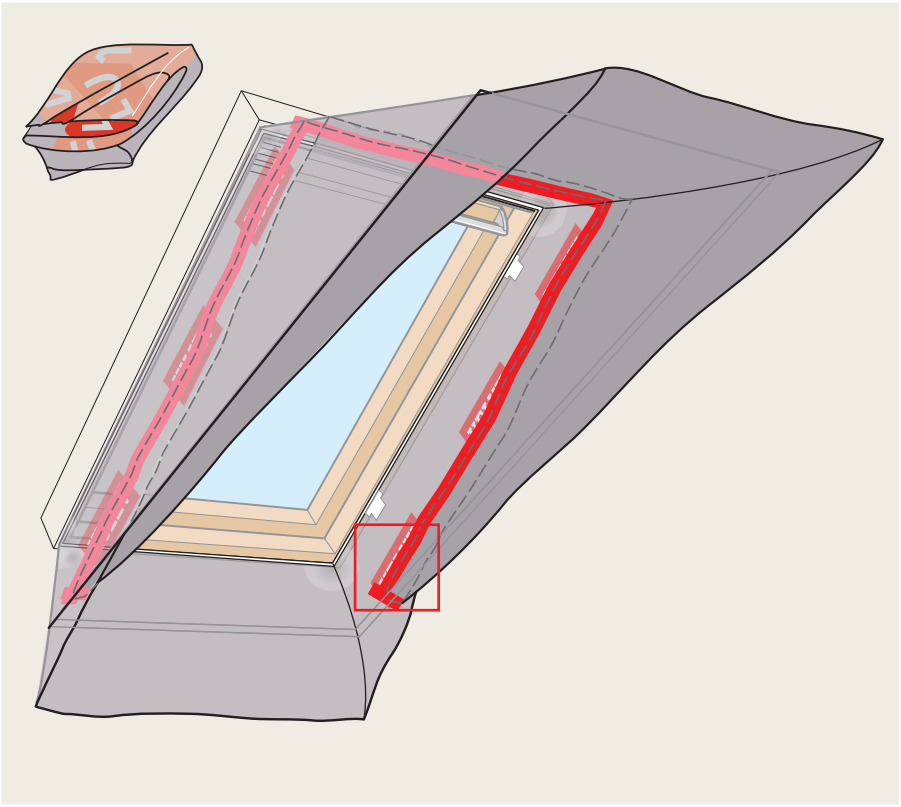

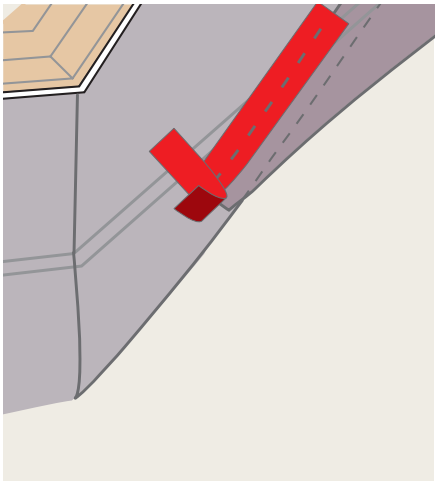

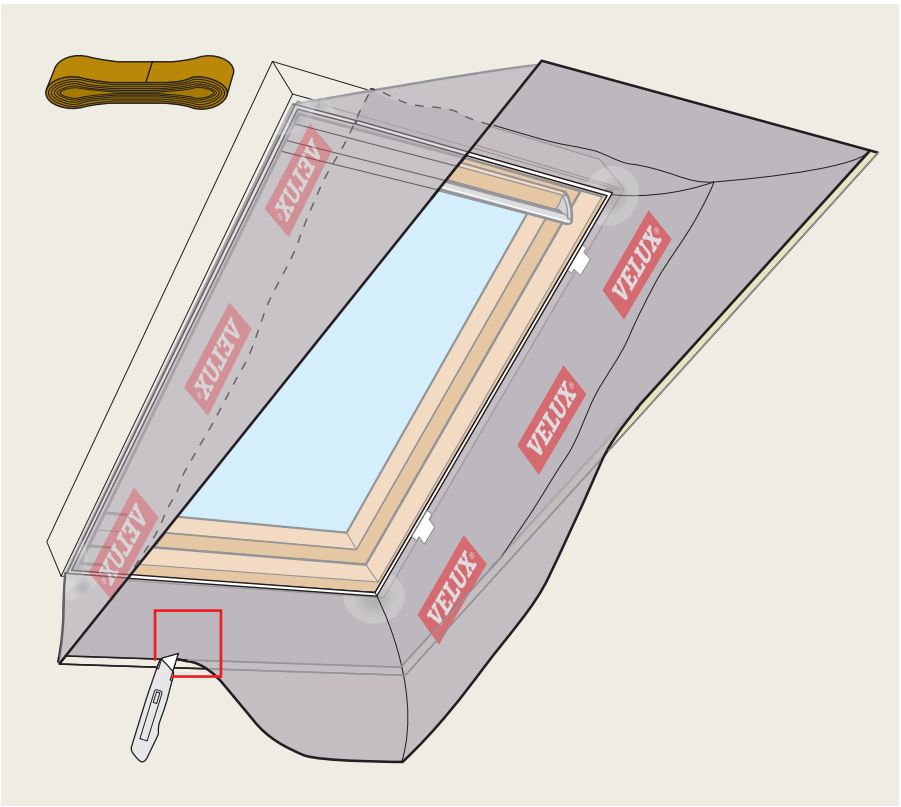

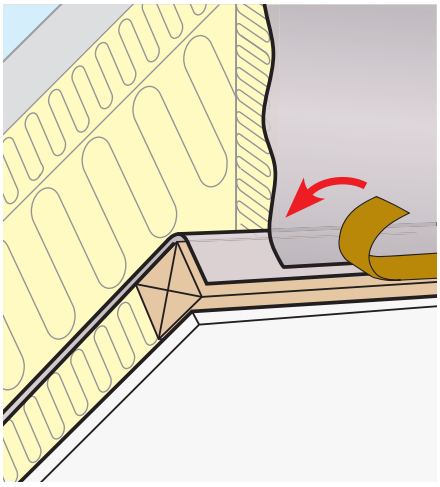

9

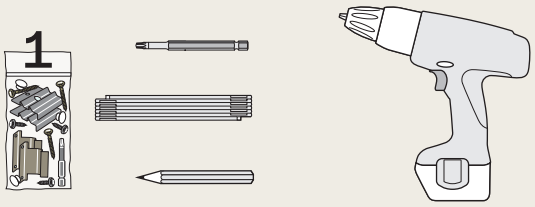

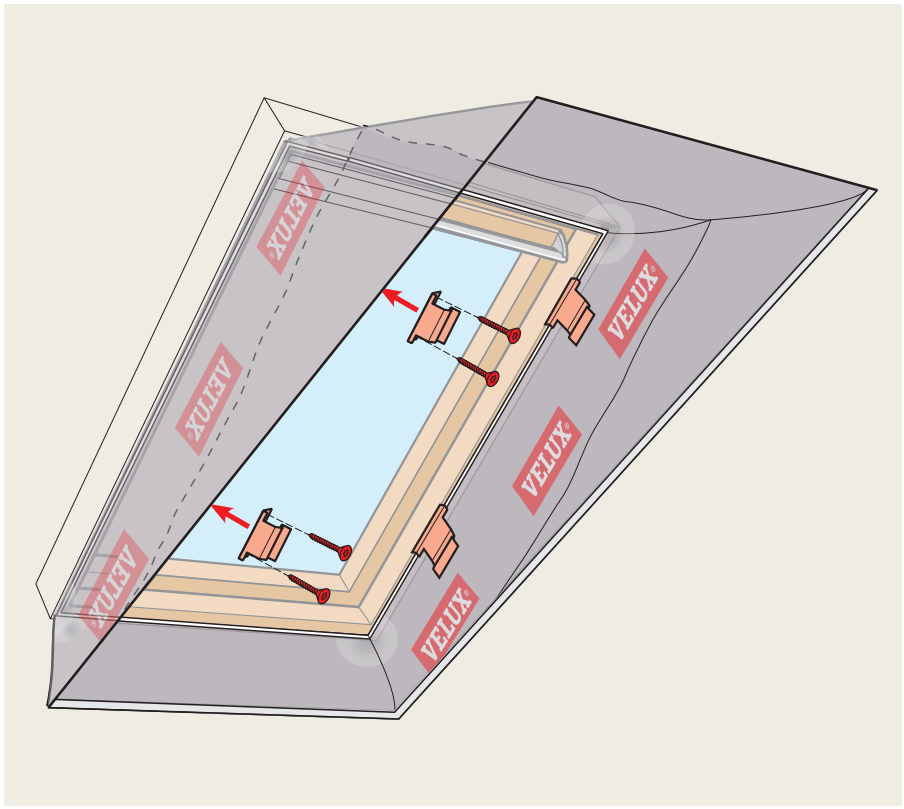

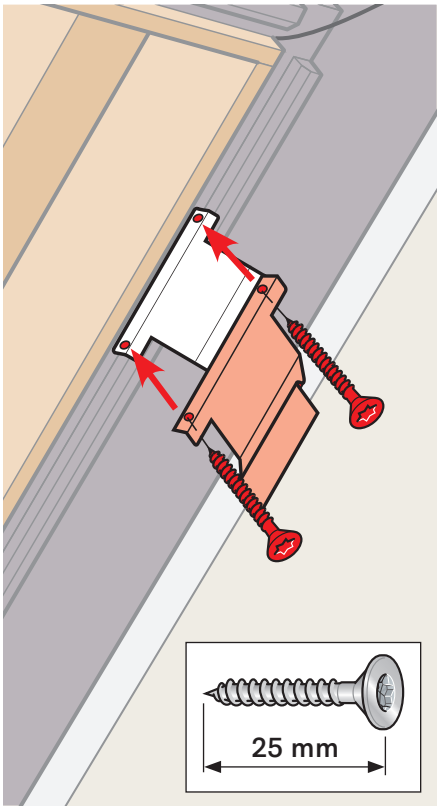

10

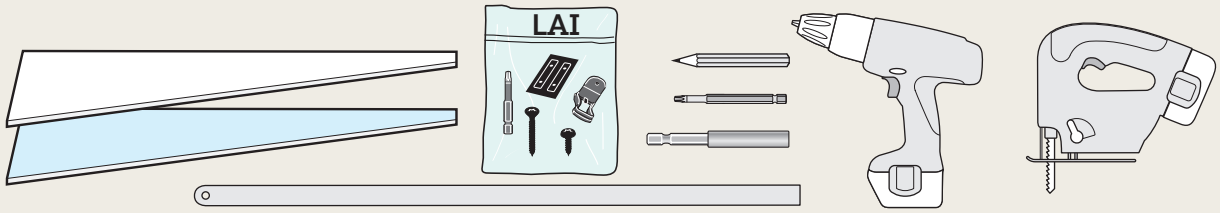

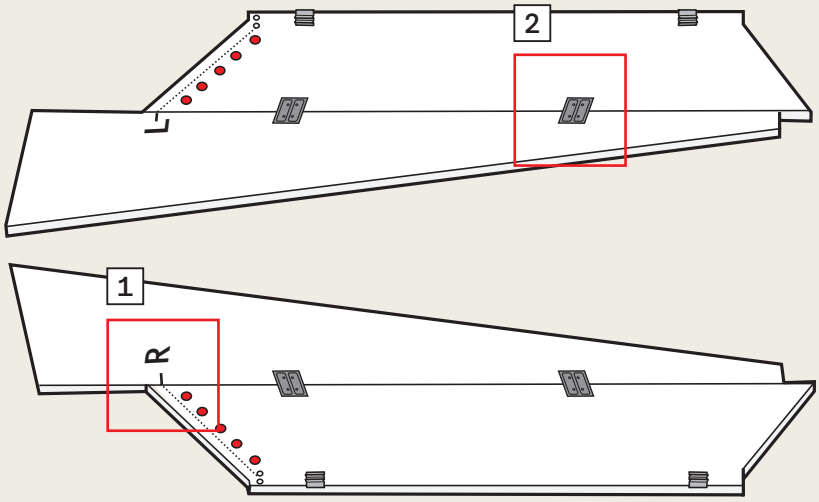

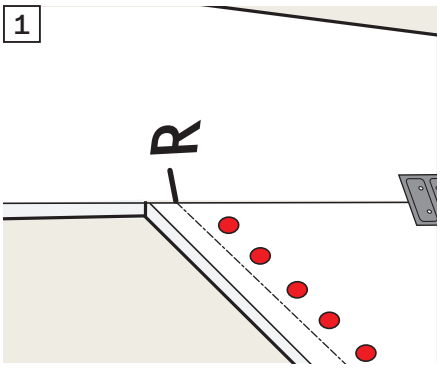

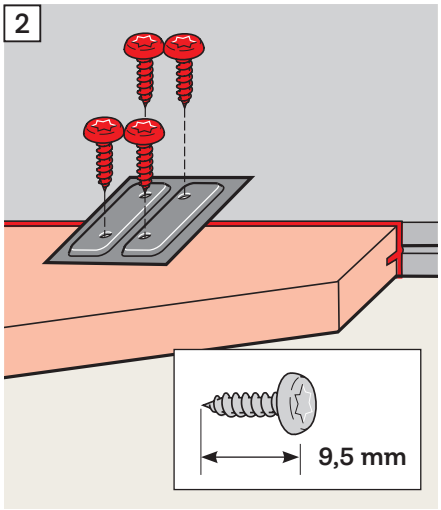

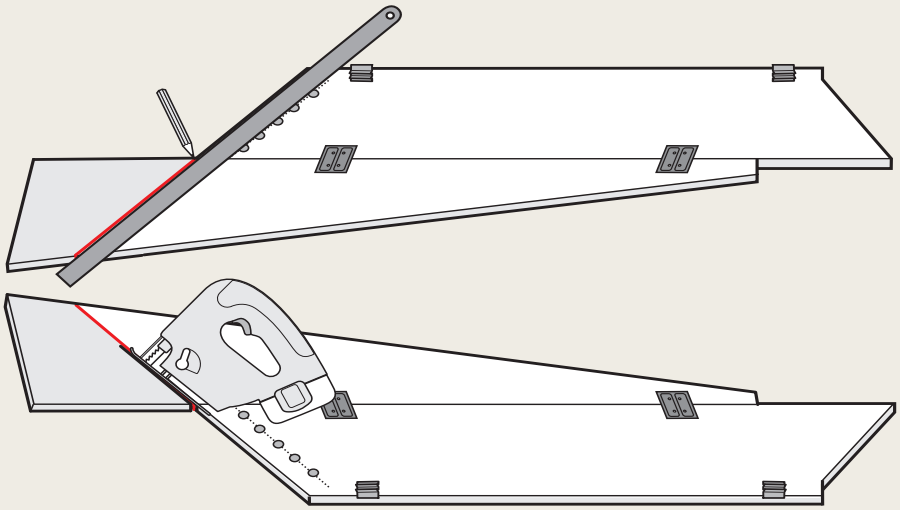

11

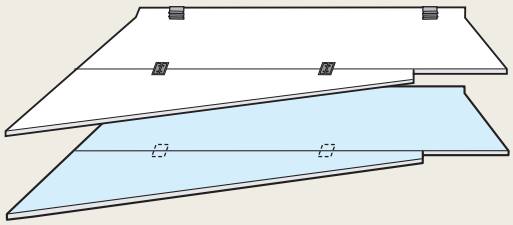

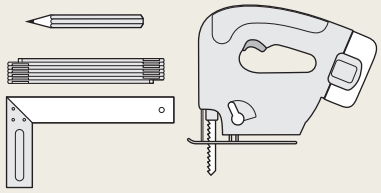

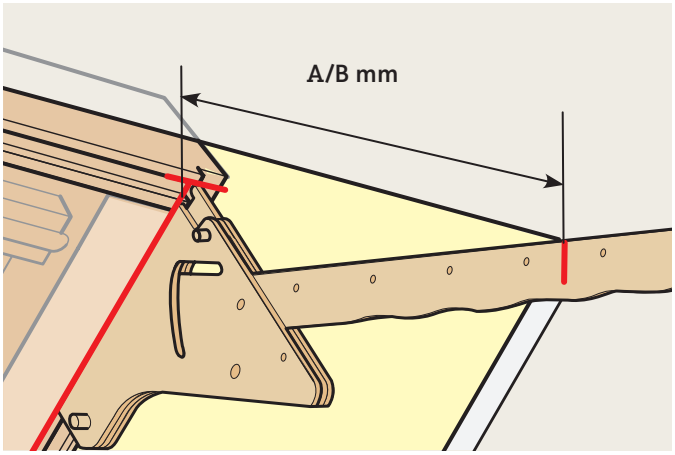

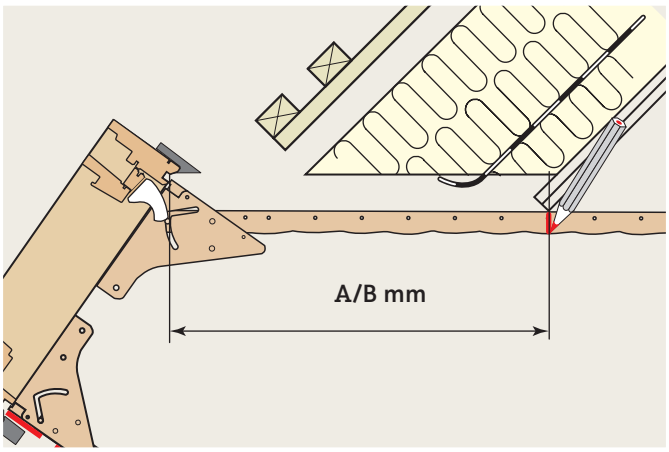

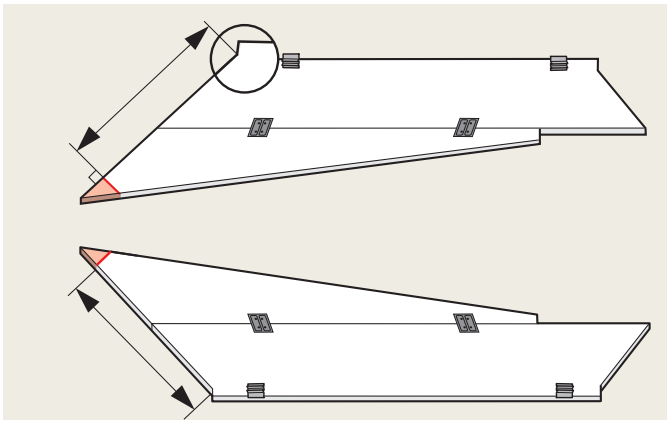

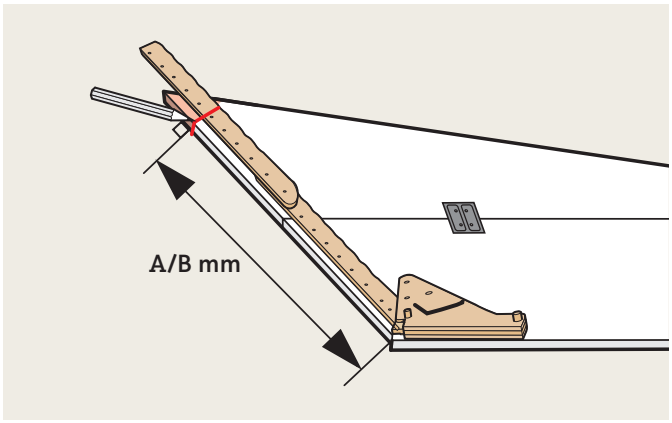

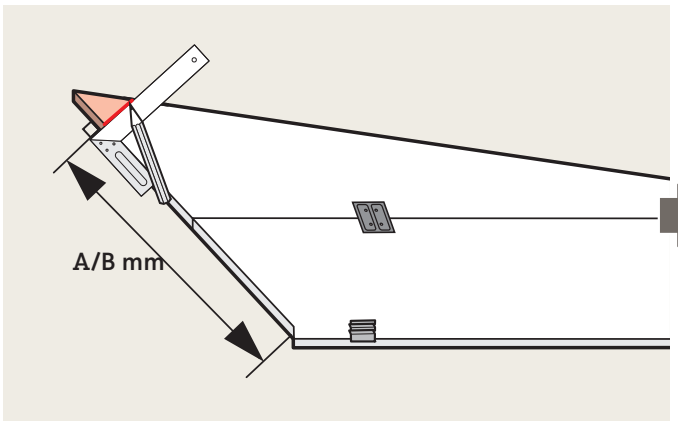

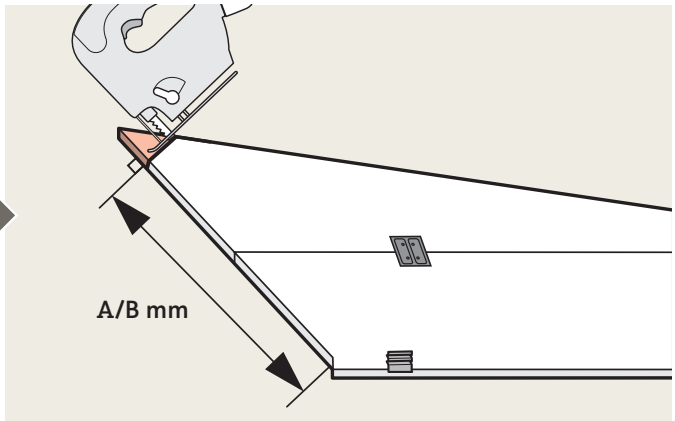

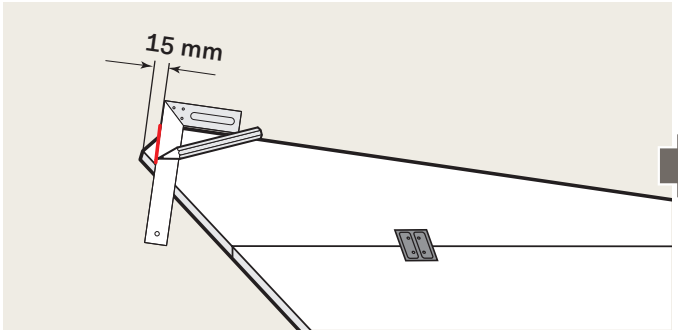

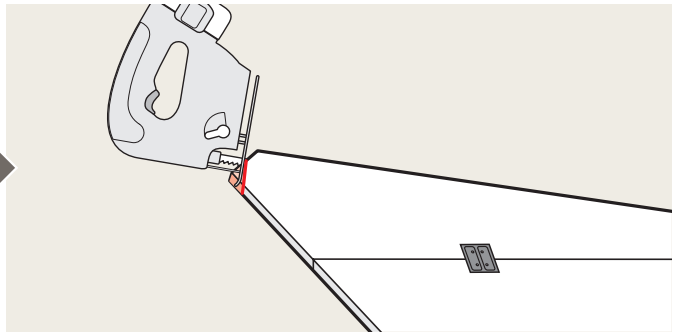

12

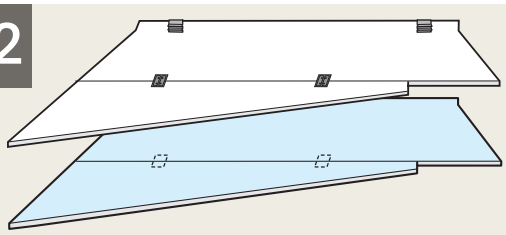

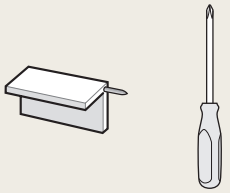

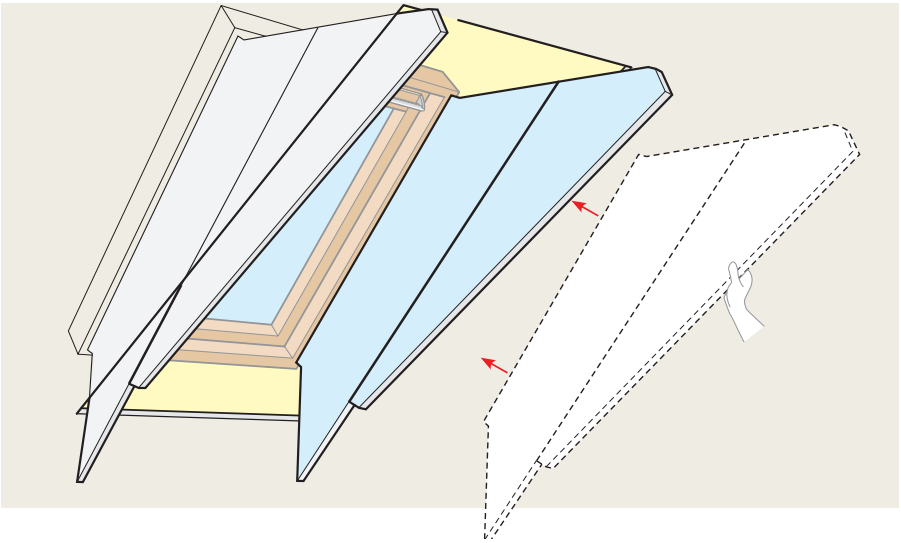

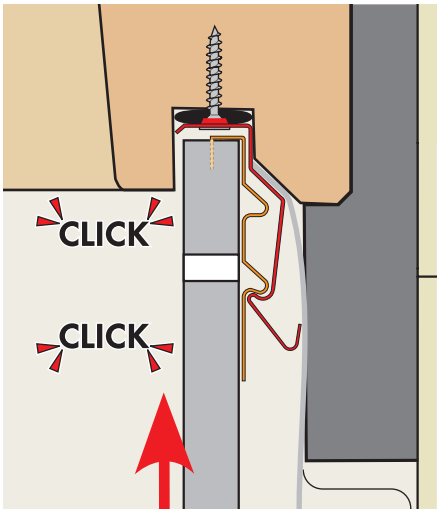

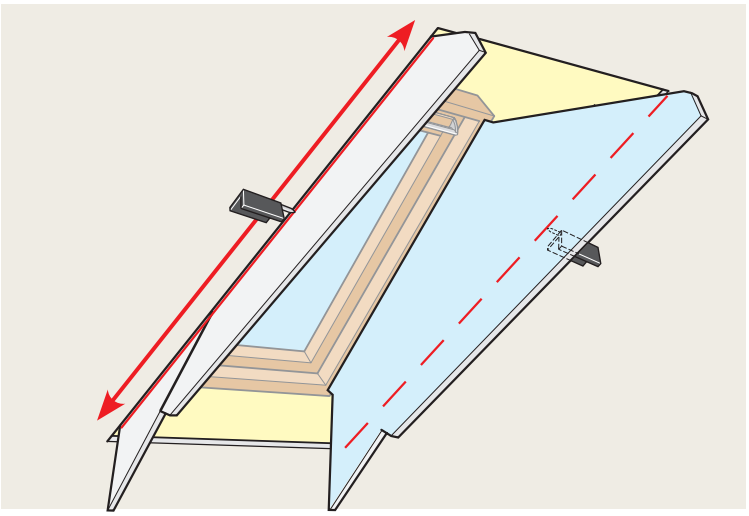

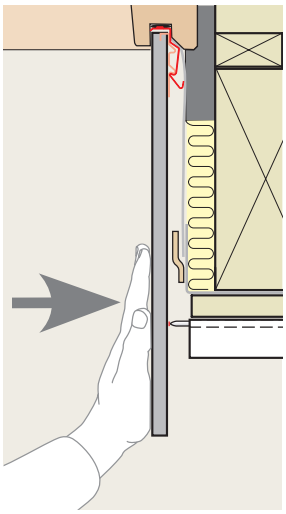

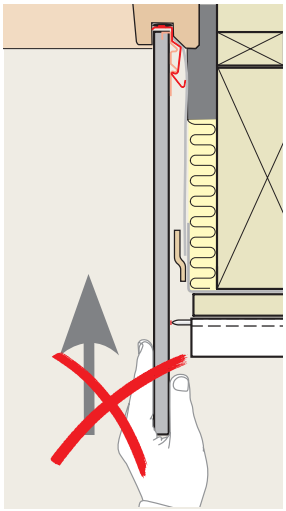

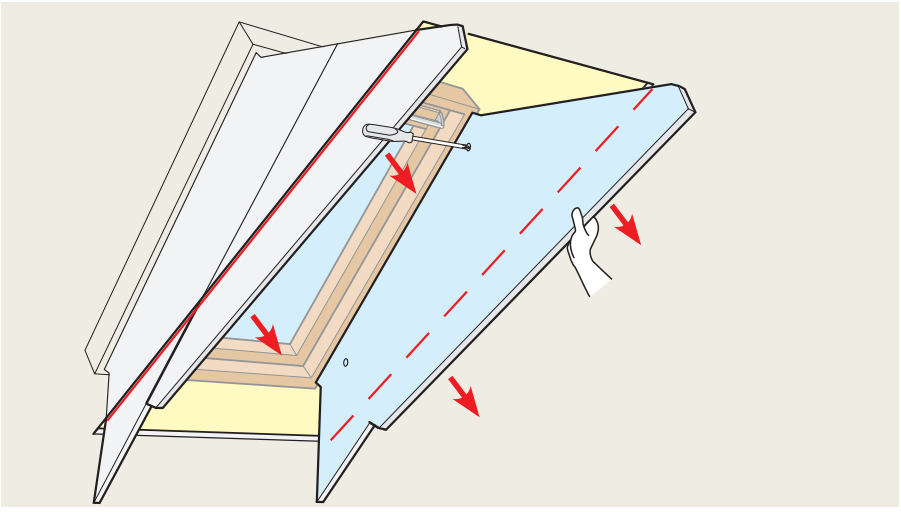

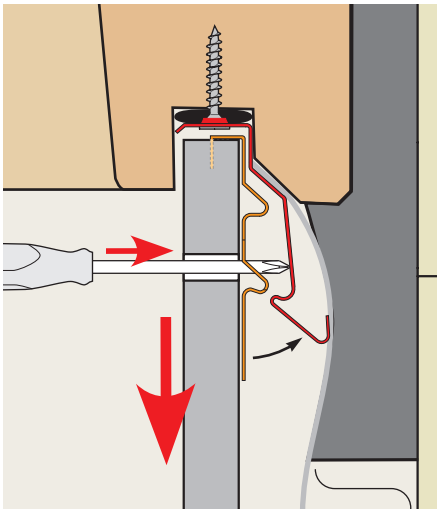

13

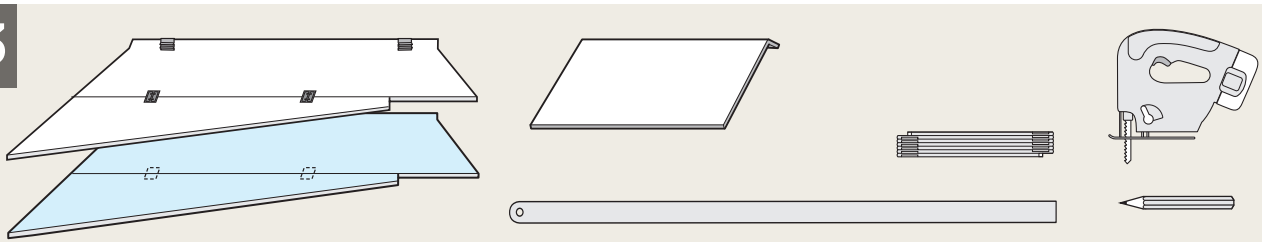

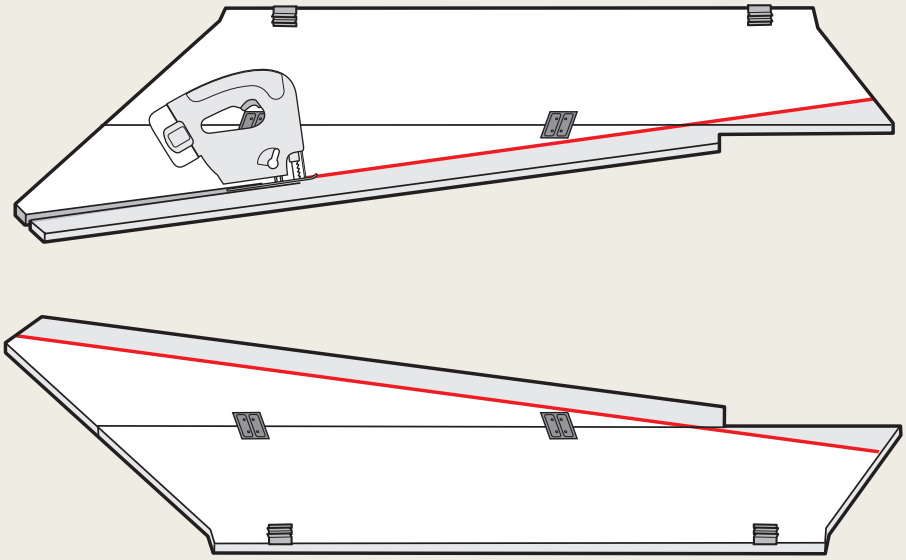

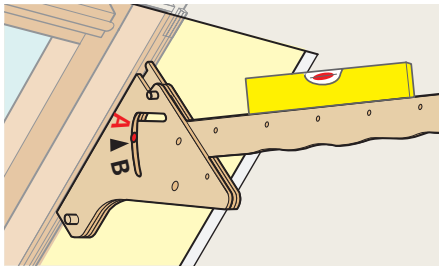

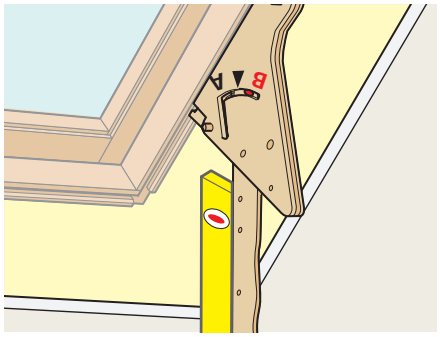

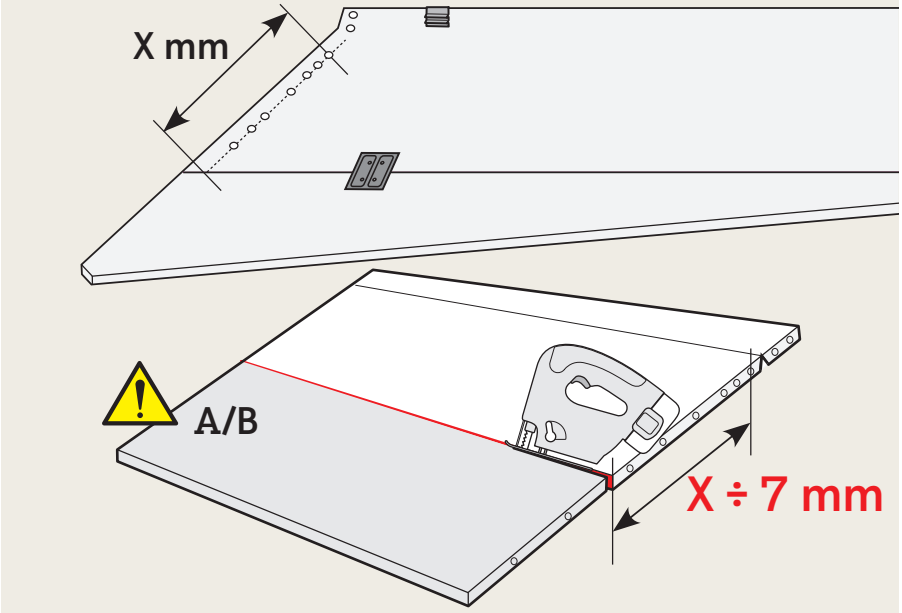

14

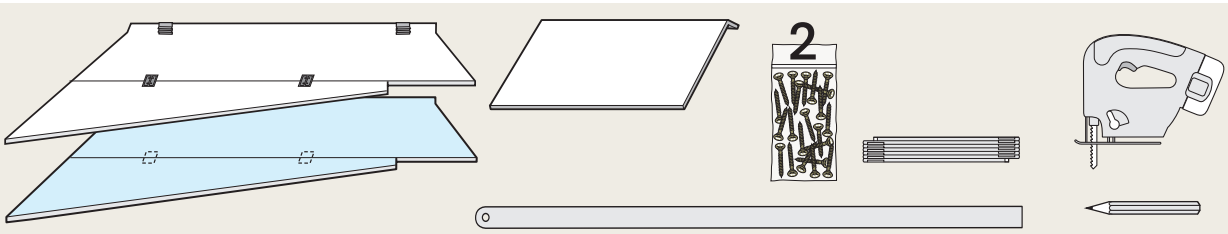

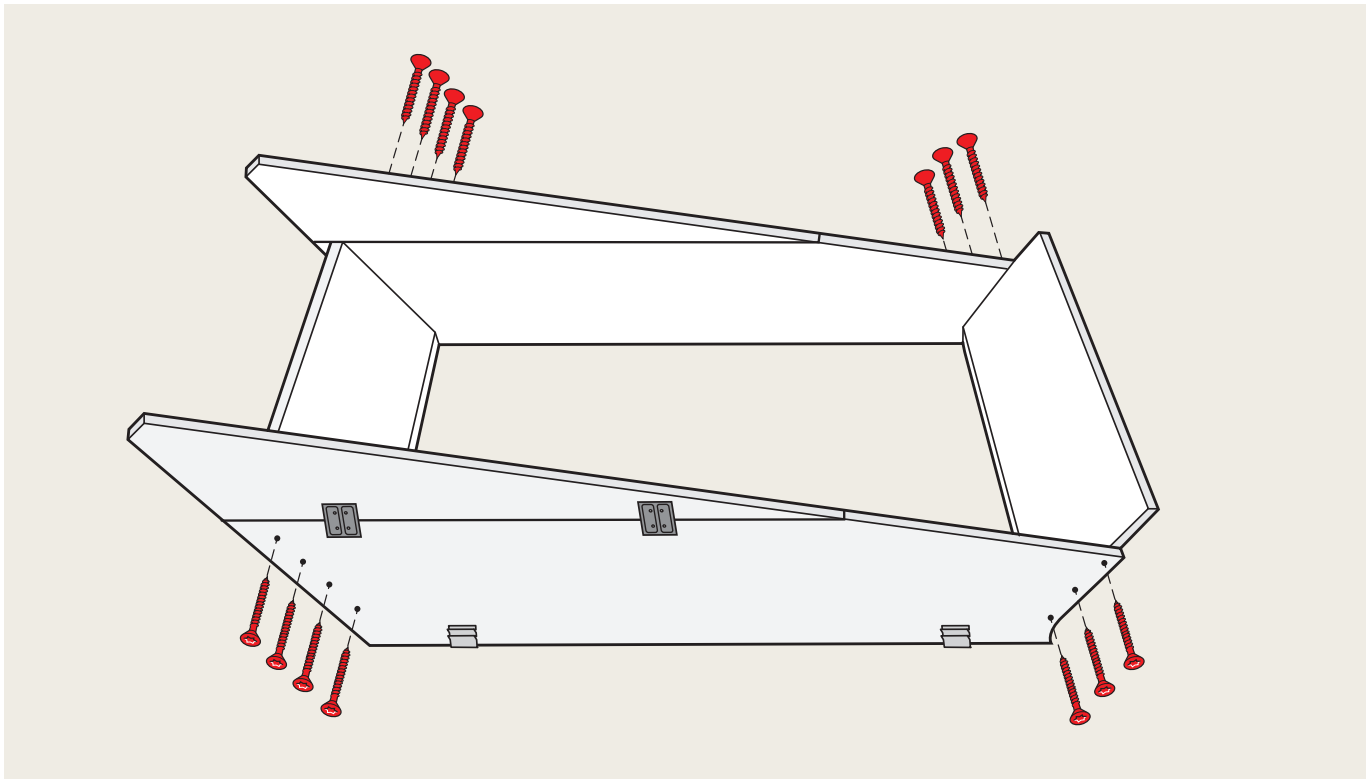

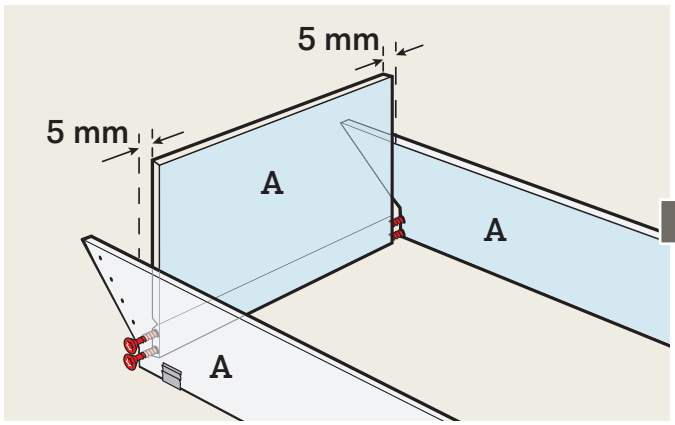

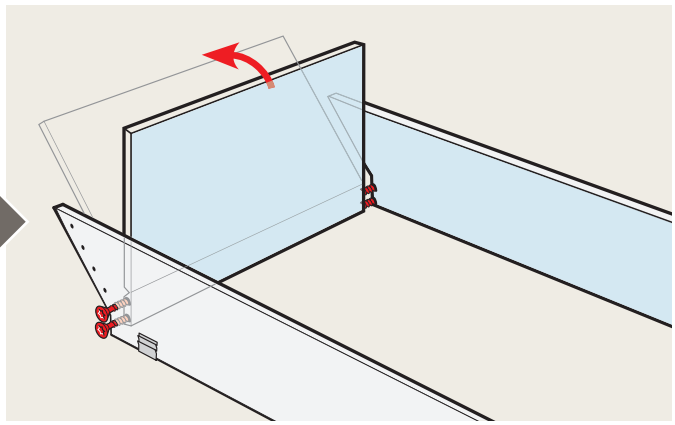

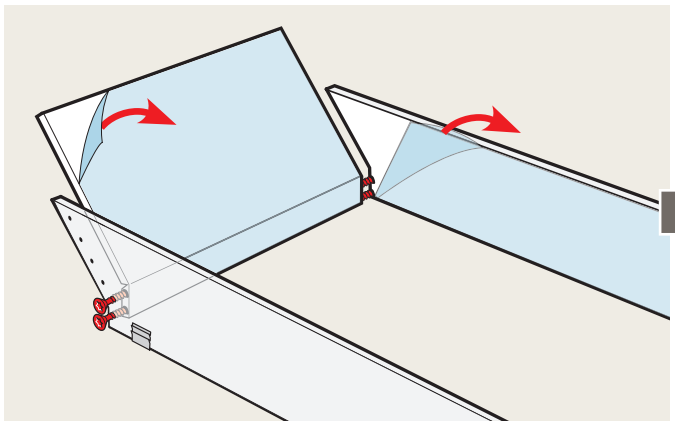

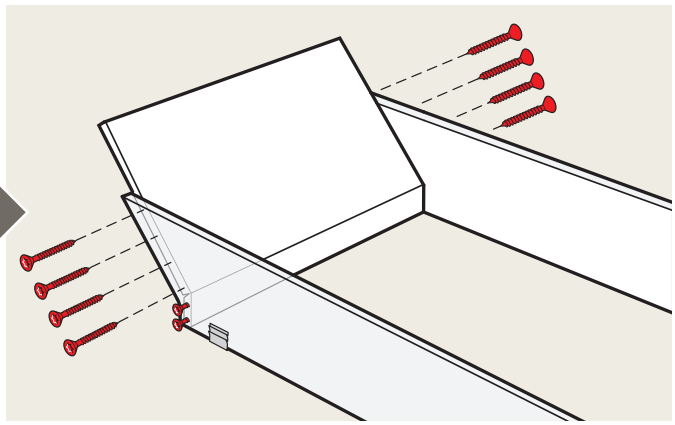

15

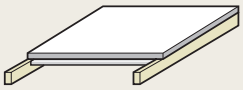

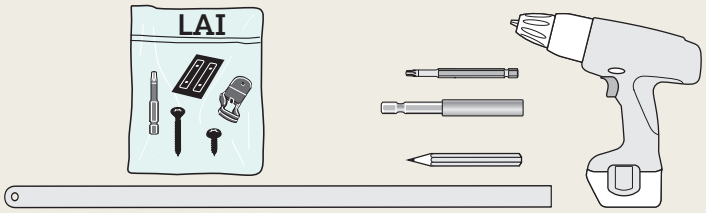

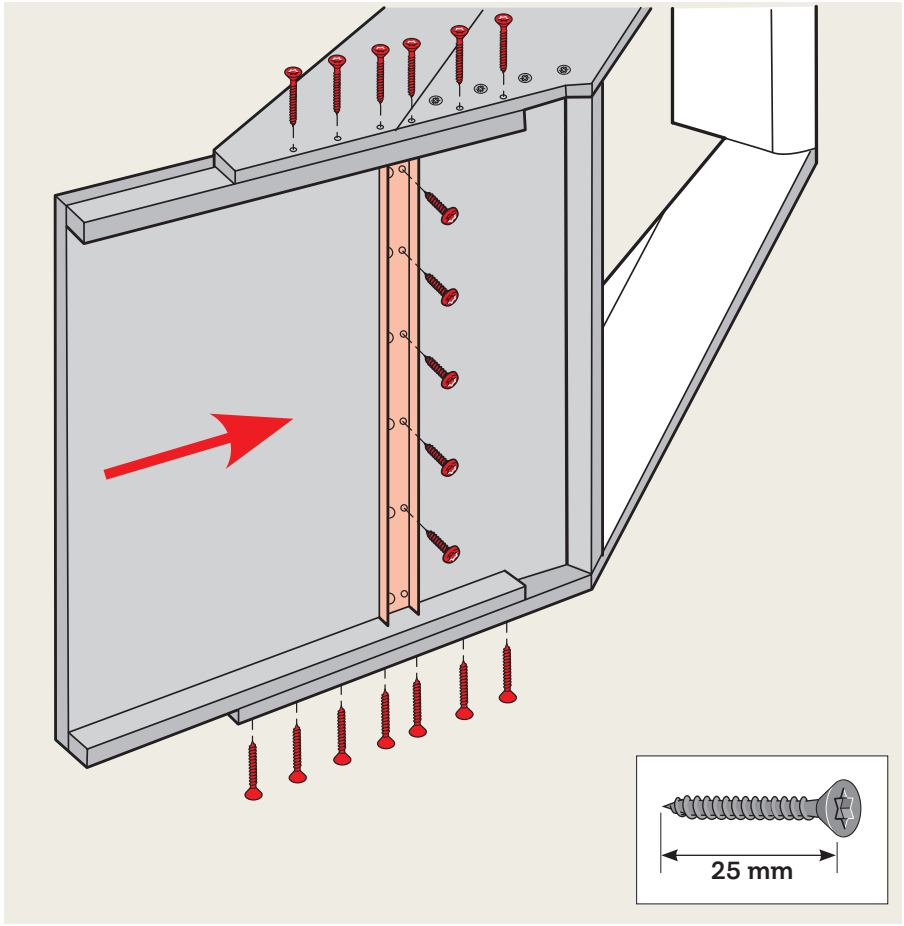

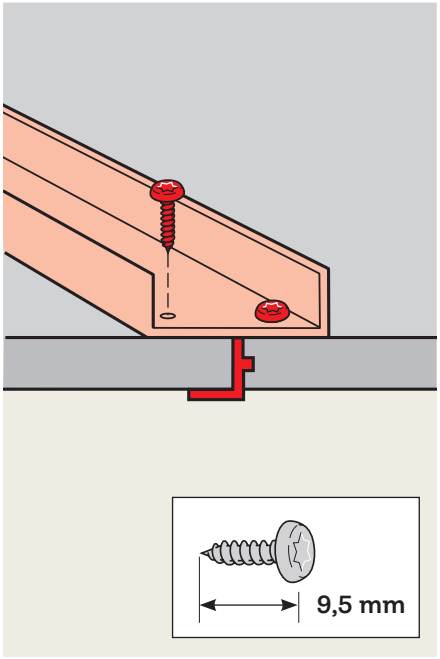

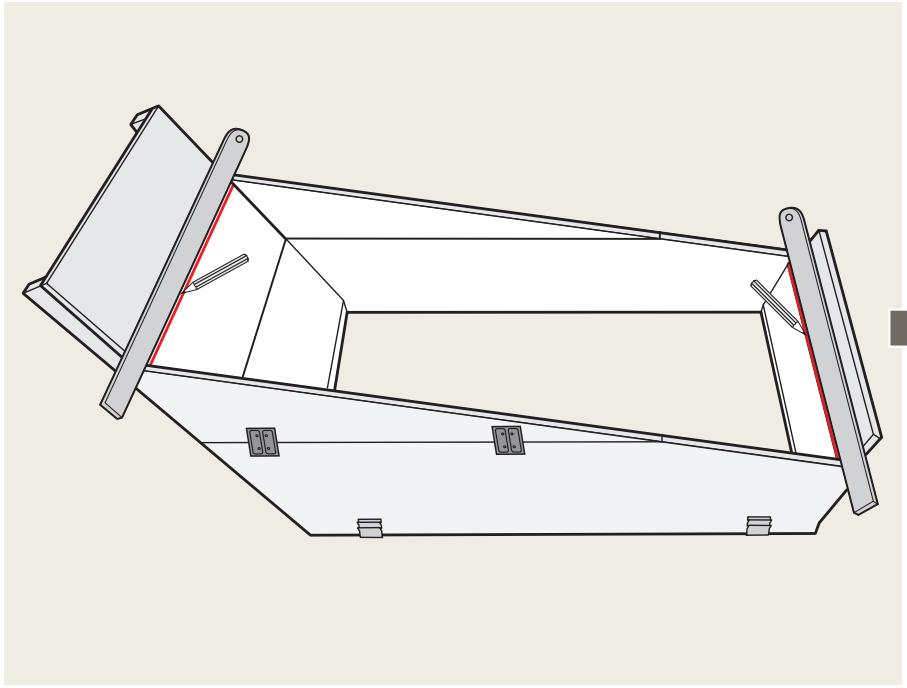

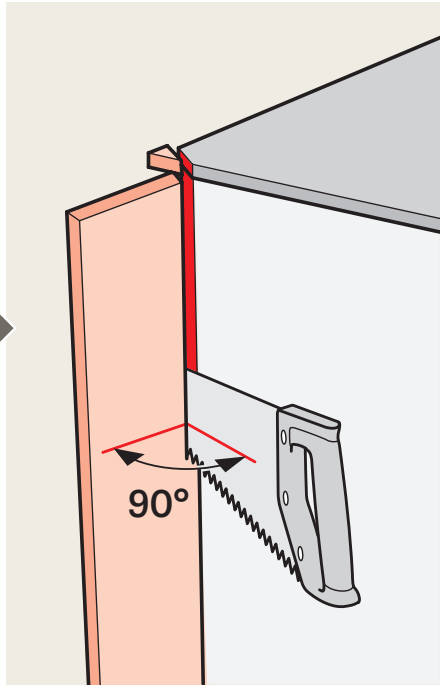

16

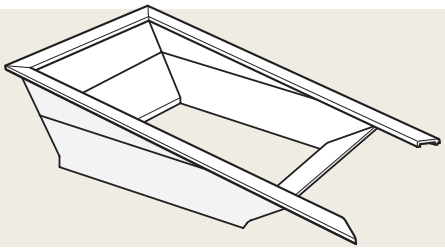



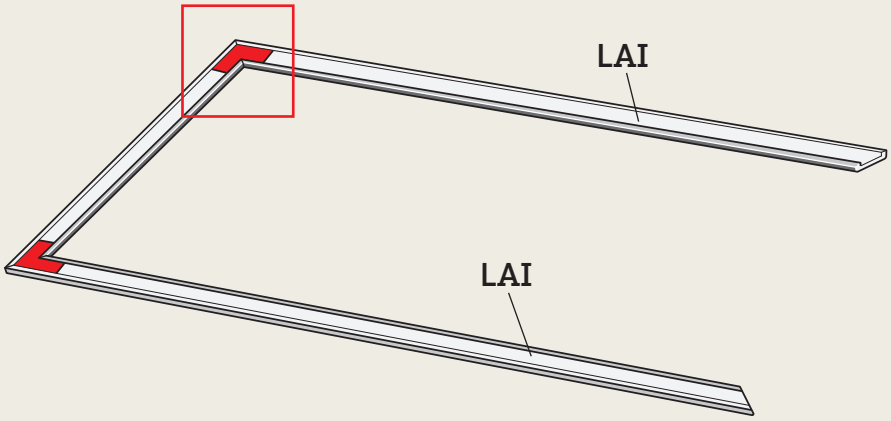

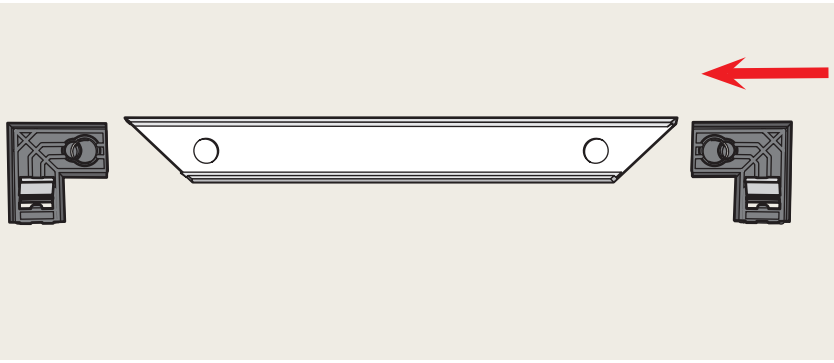

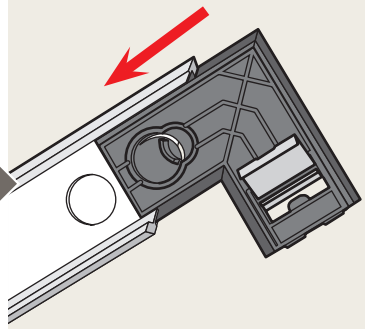



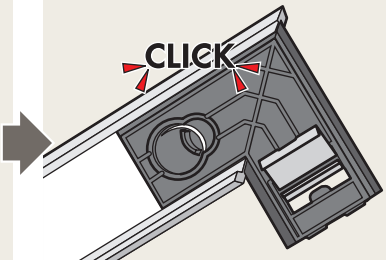

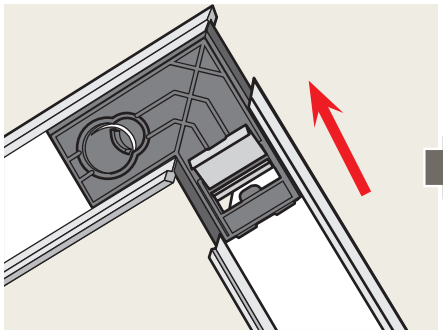

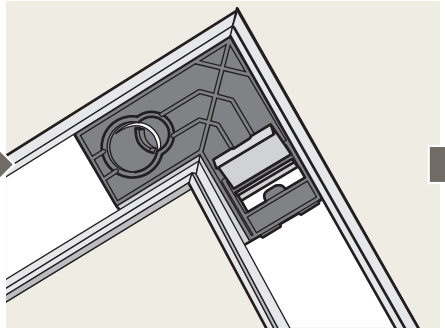

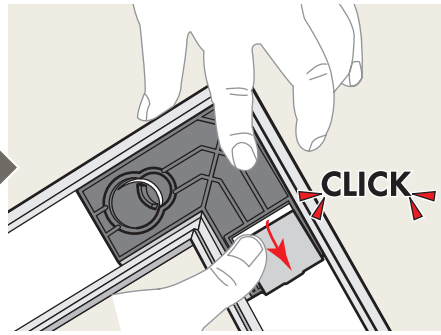

17

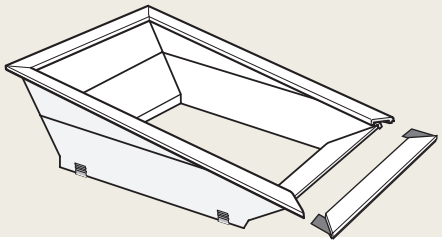





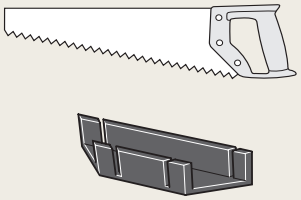

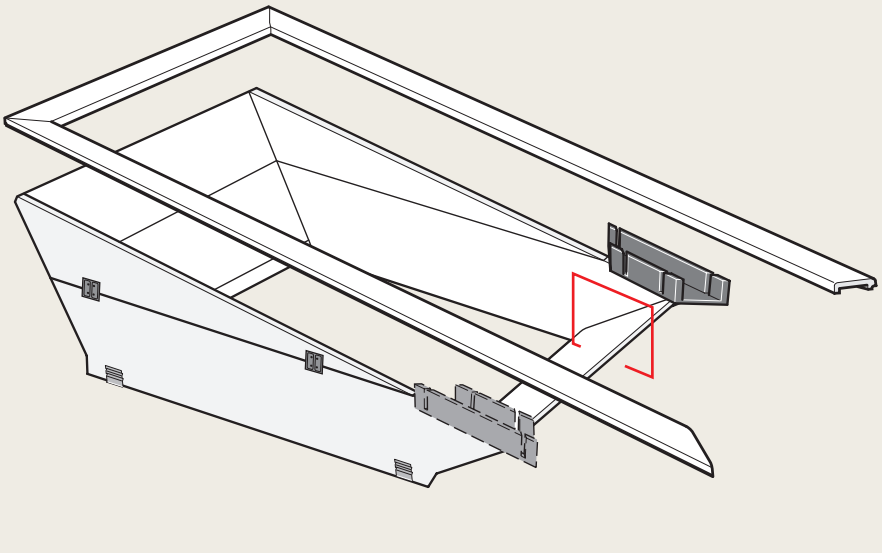

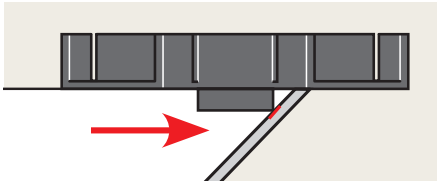

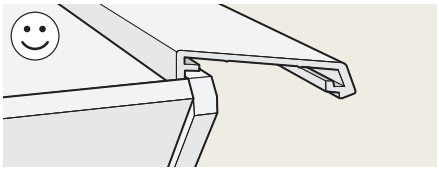

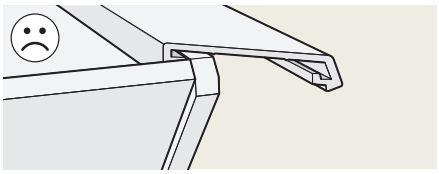

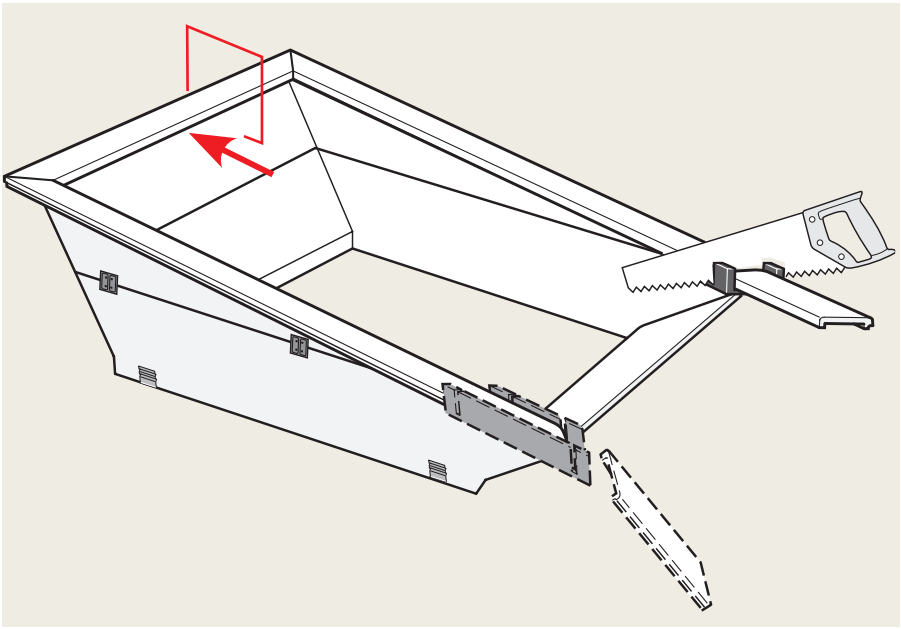

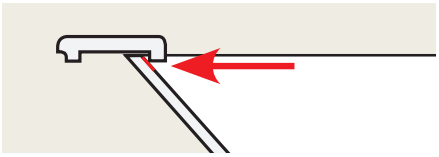

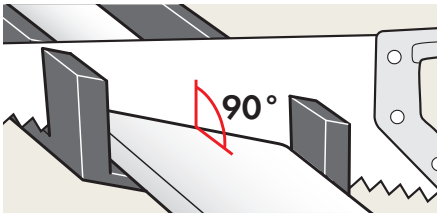

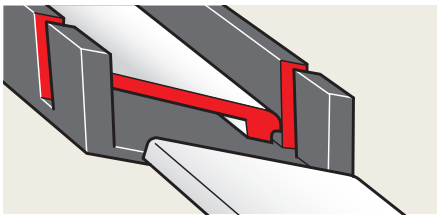

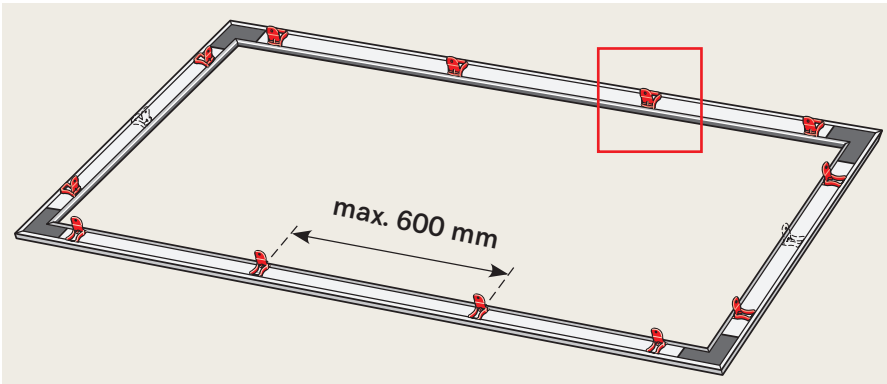

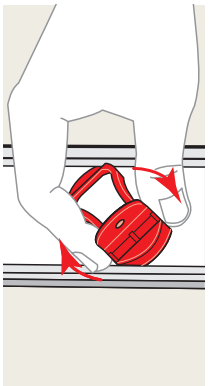



18





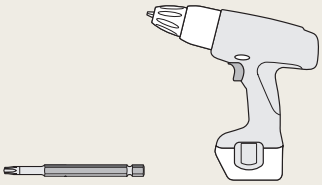

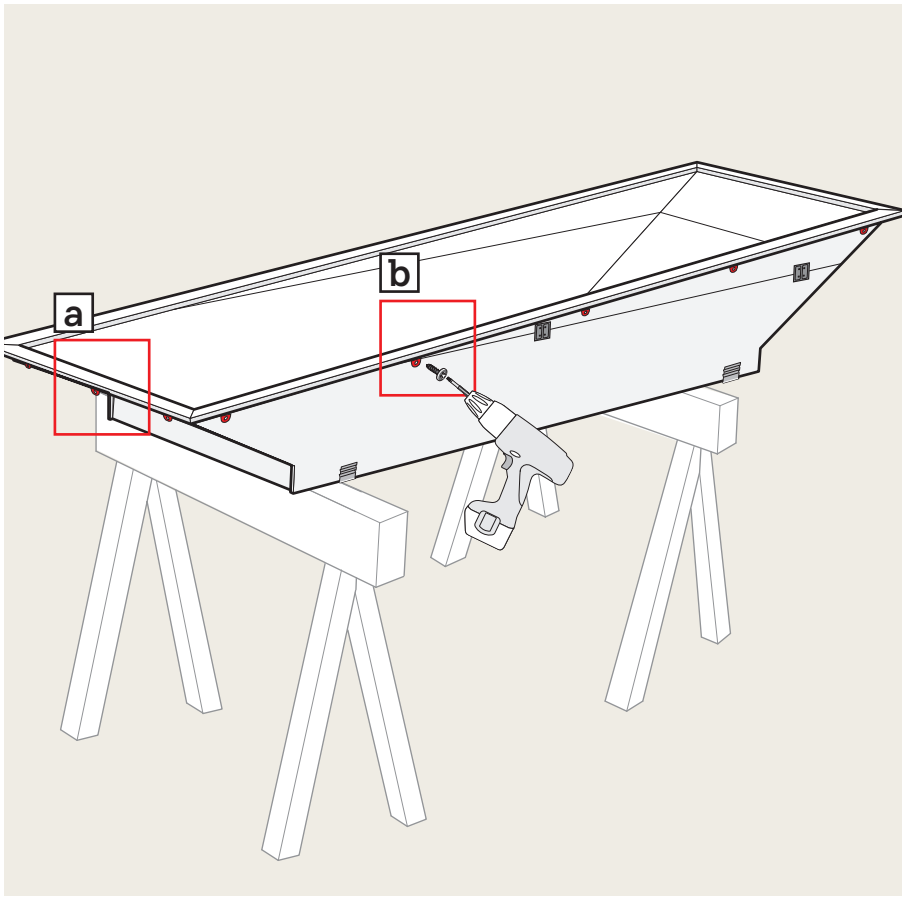

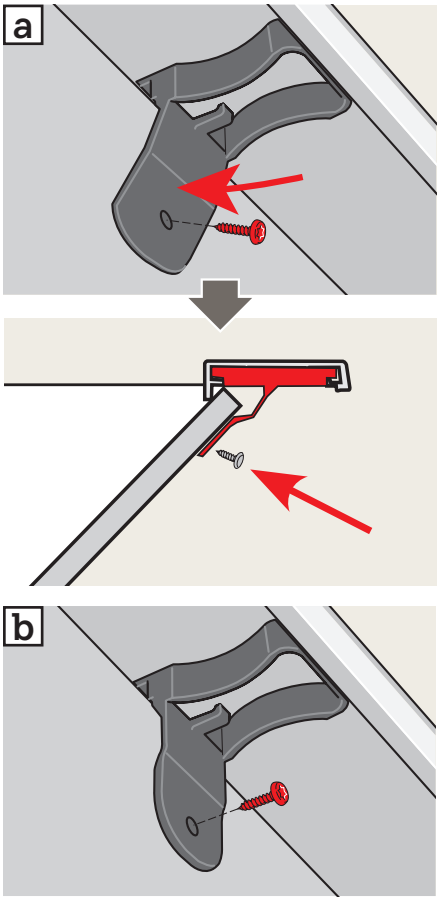

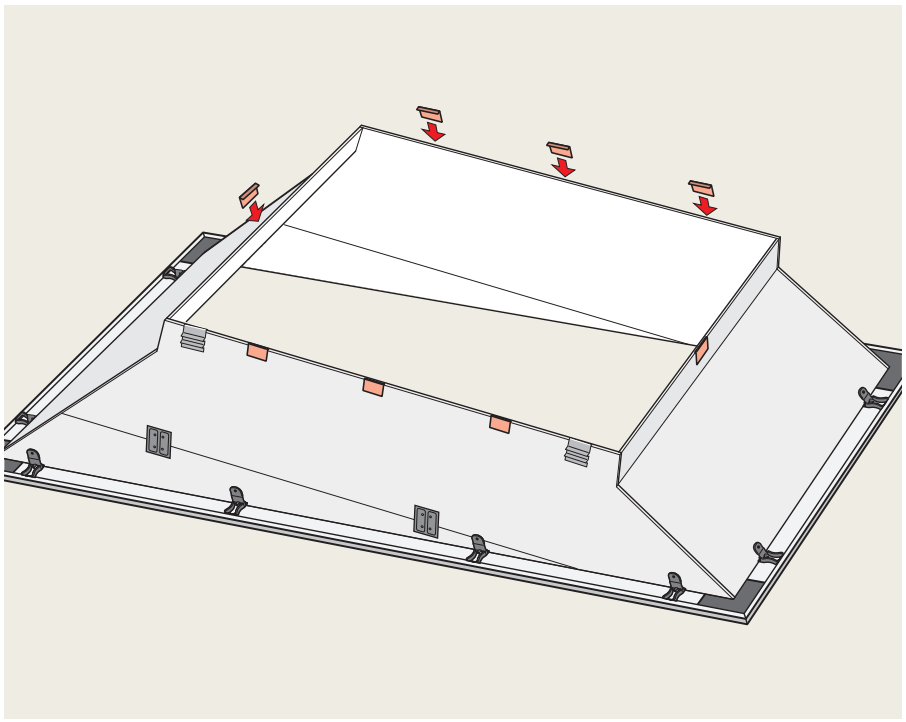

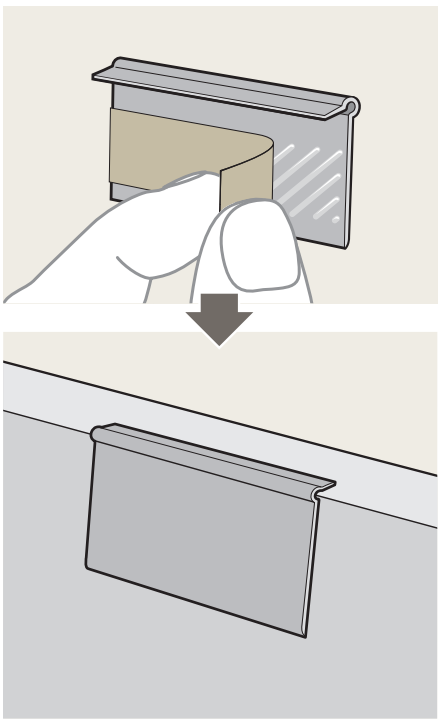

19



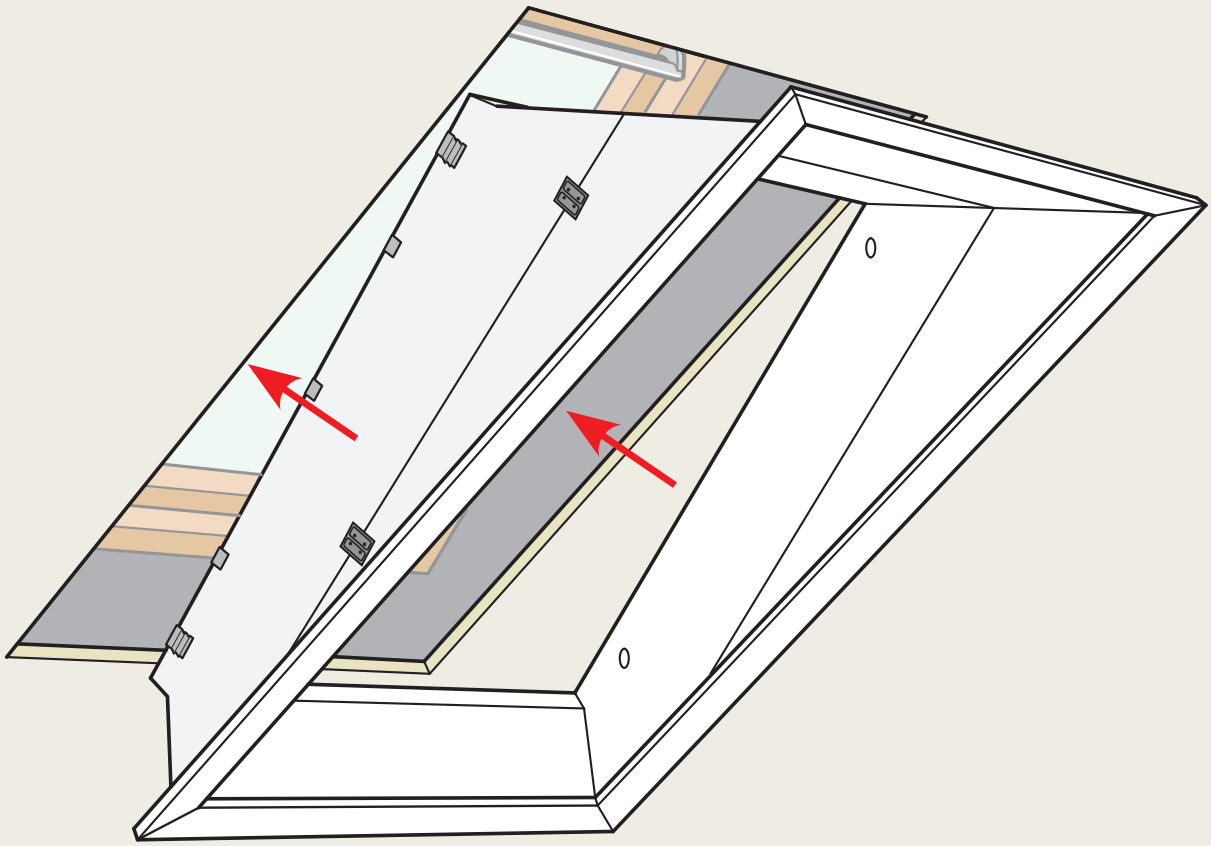

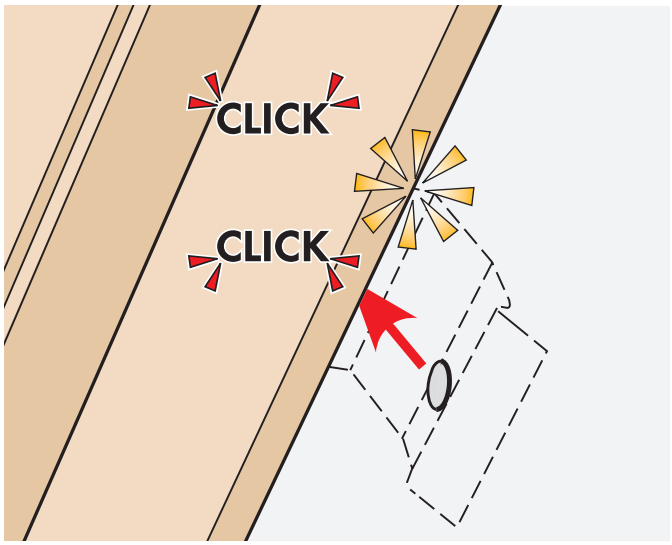

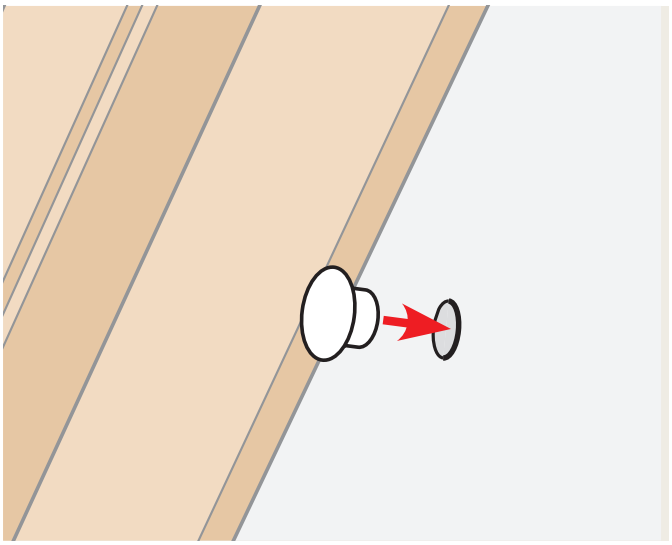

VELUX®

www.velux.com

velux.com/contact

INSTALLATION INSTRUCTIONS FOR LAI. ©2013, 2025 VELUX GROUP. ®VELUX AND THE VELUX LOGO ARE REGISTERED TRADEMARKS USED UNDER LICENCE BY THE VELUX GROUP