VELUX®

EKB

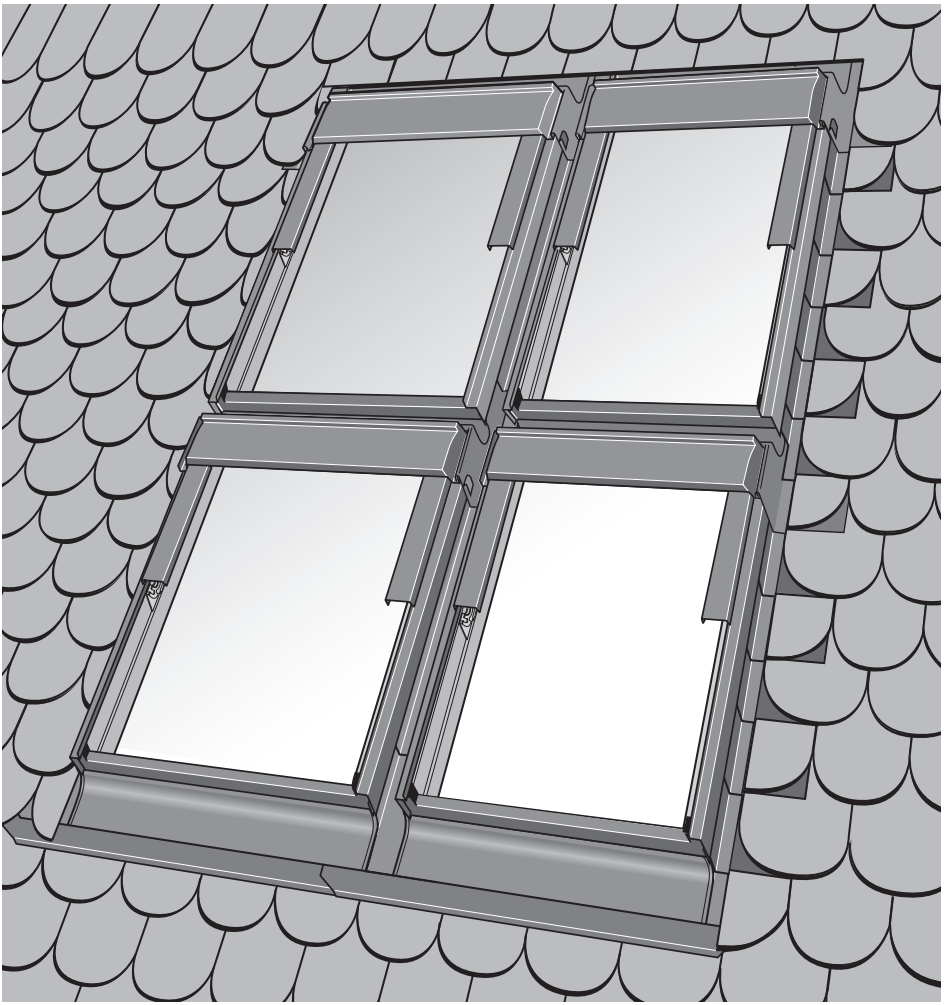

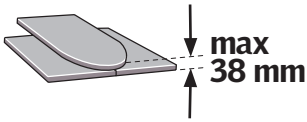

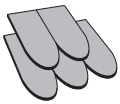

VAS 453207-2025-04

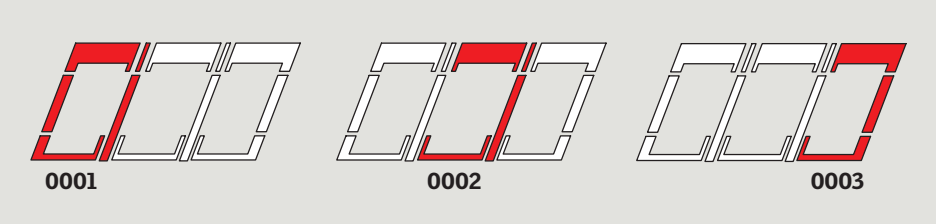
0001
0002
0003

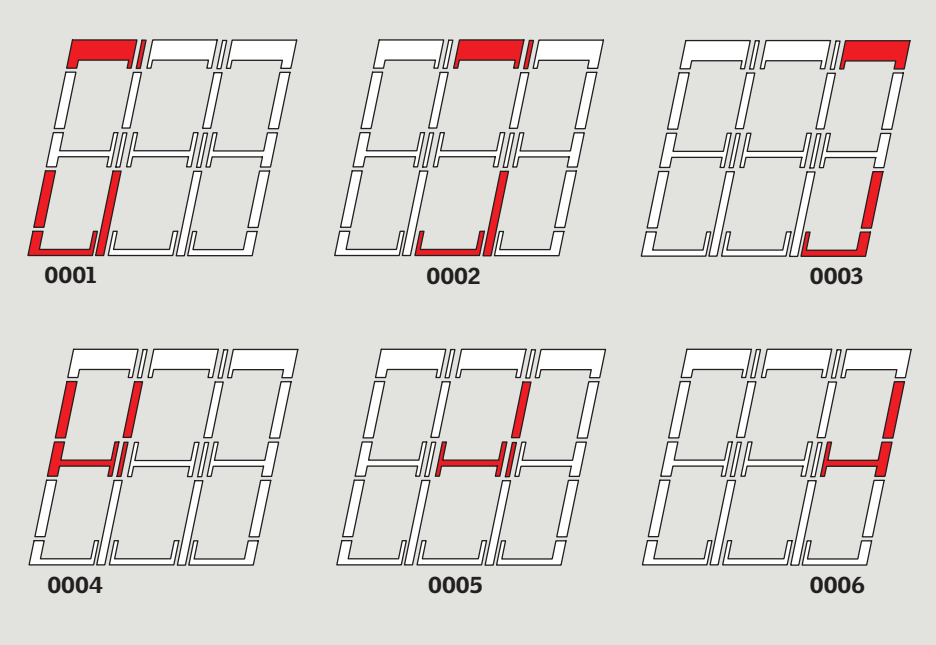
0001
0002
0003
0004
0005
0006

VELUX
VELUX
a = xx mm
b = xx mm

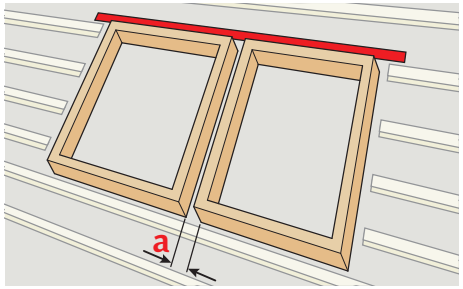
a

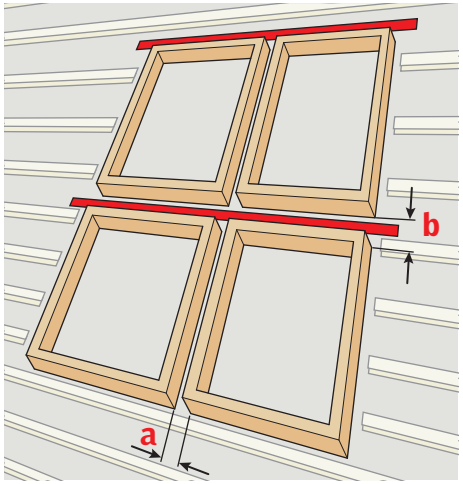
b
a

1

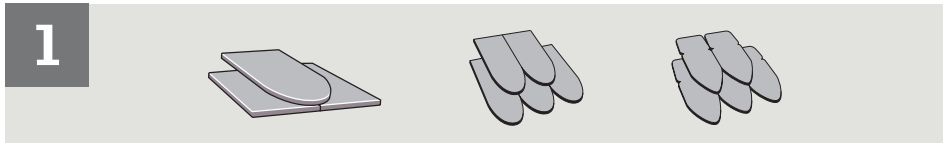

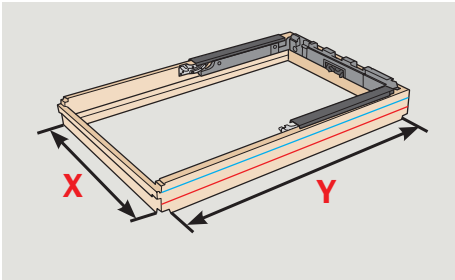
X
Y

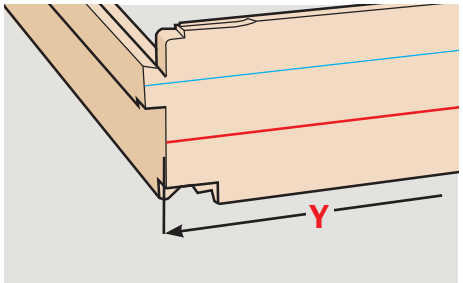
Y

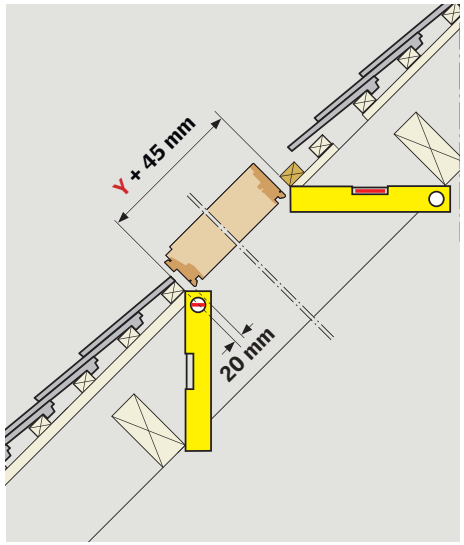
Y + 45 mm
20 mm

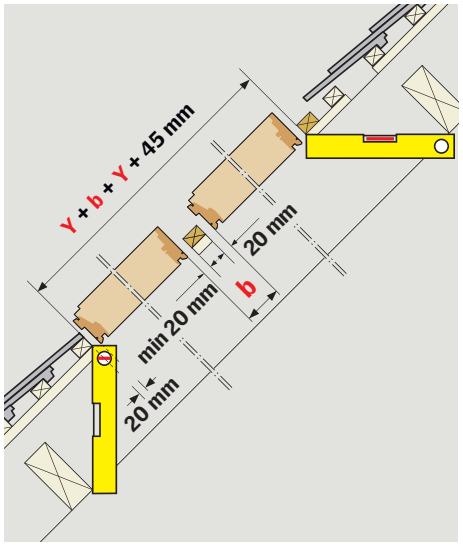
Y + b + Y + 45 mm
20 mm
b
min 20 mm
20 mm

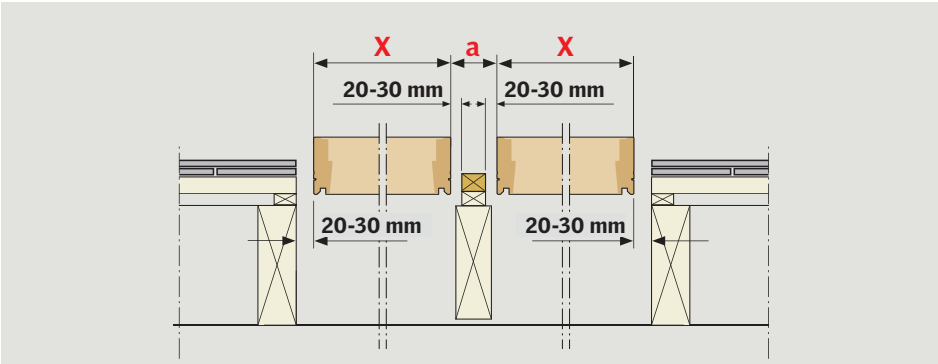
X
a
X
20-30 mm
20-30 mm
20-30 mm
20-30 mm

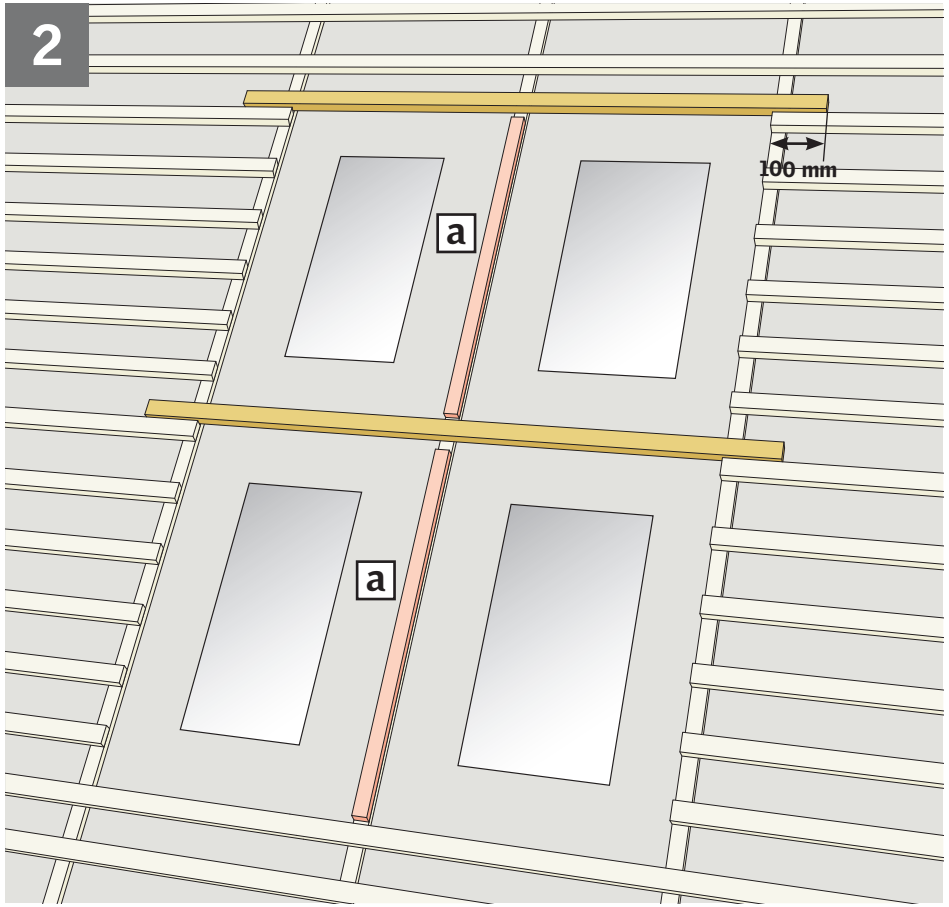
2
100 mm
a
a

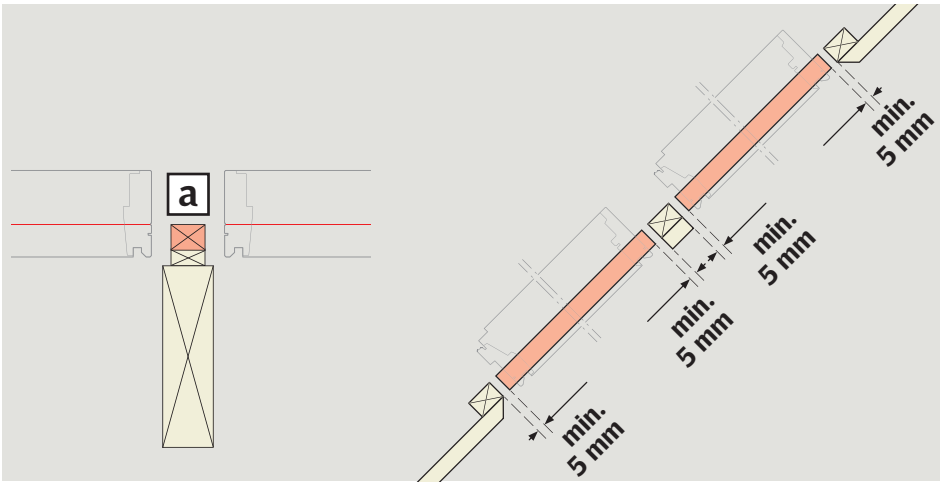
a
min.
5 mm
min.
5 mm
min.
5 mm
min.
5 mm

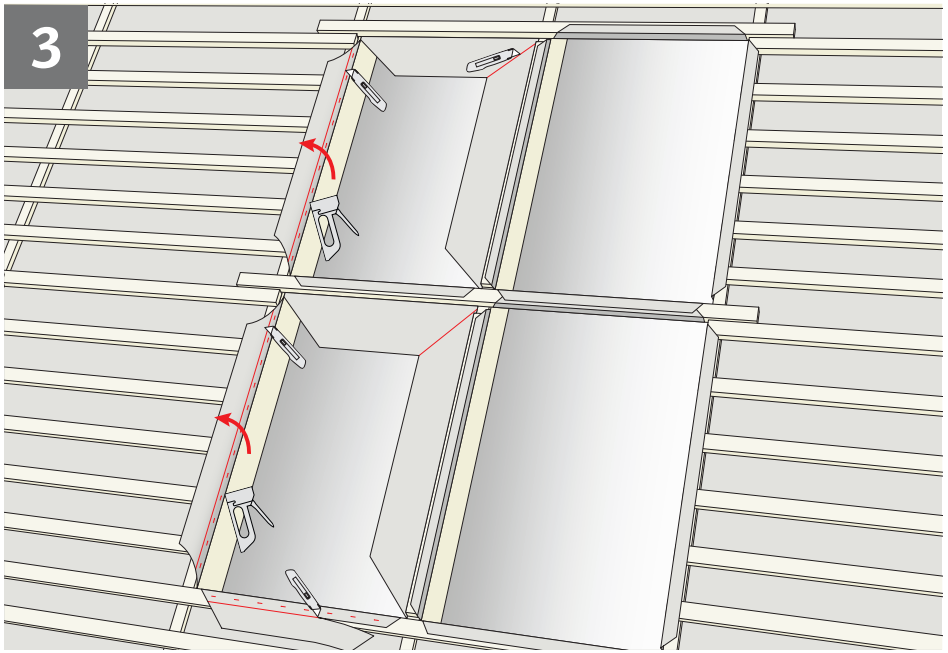
3

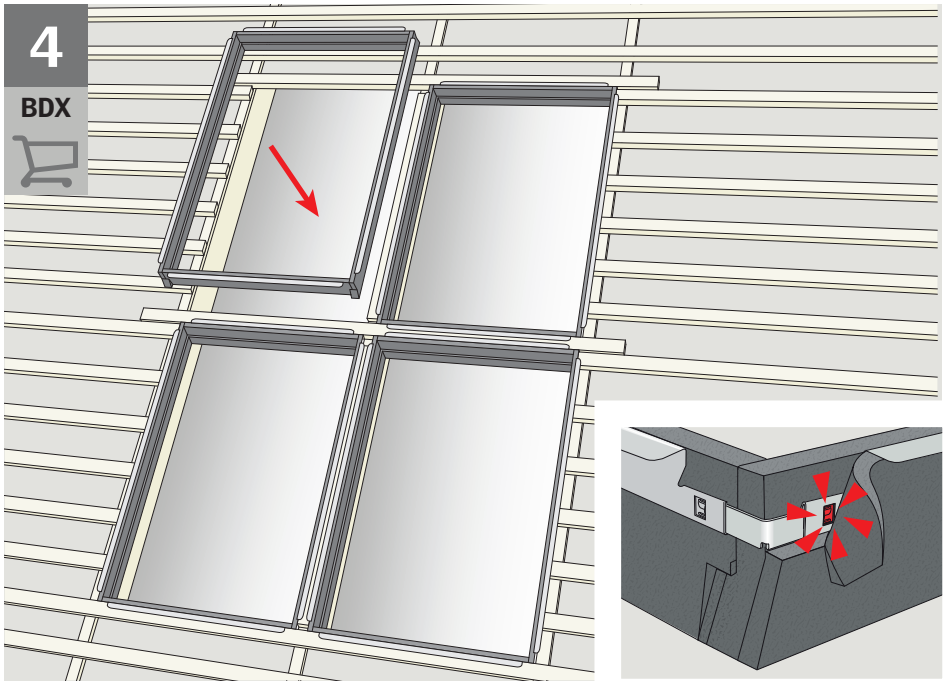
4
BDX

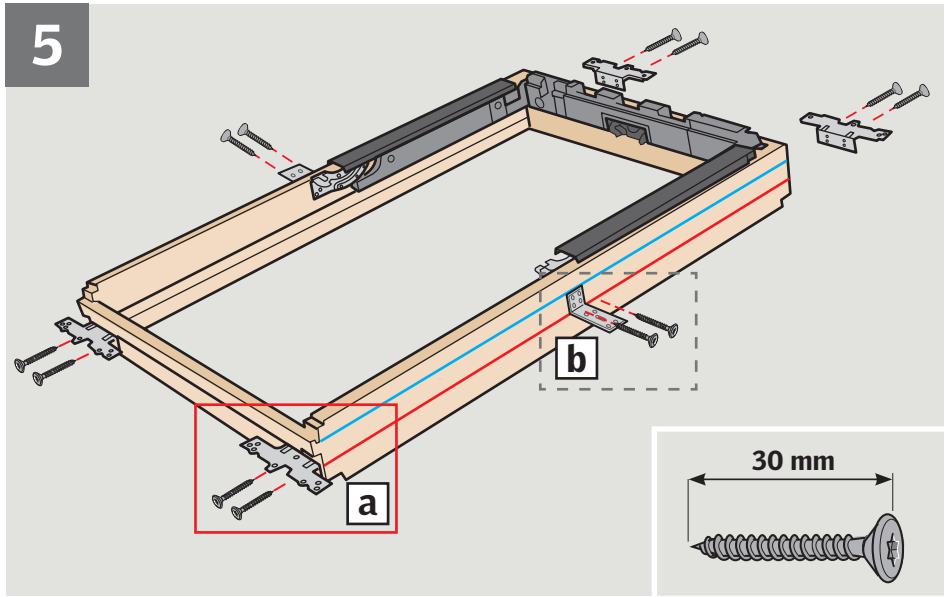
5
a
b
30 mm

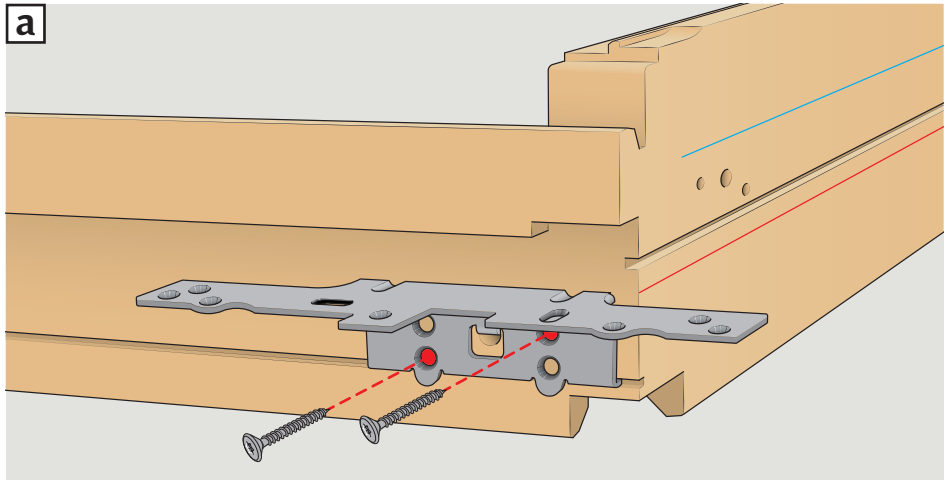
a

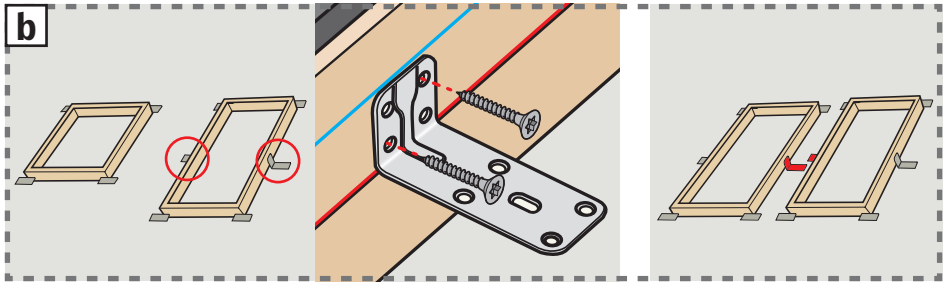
b

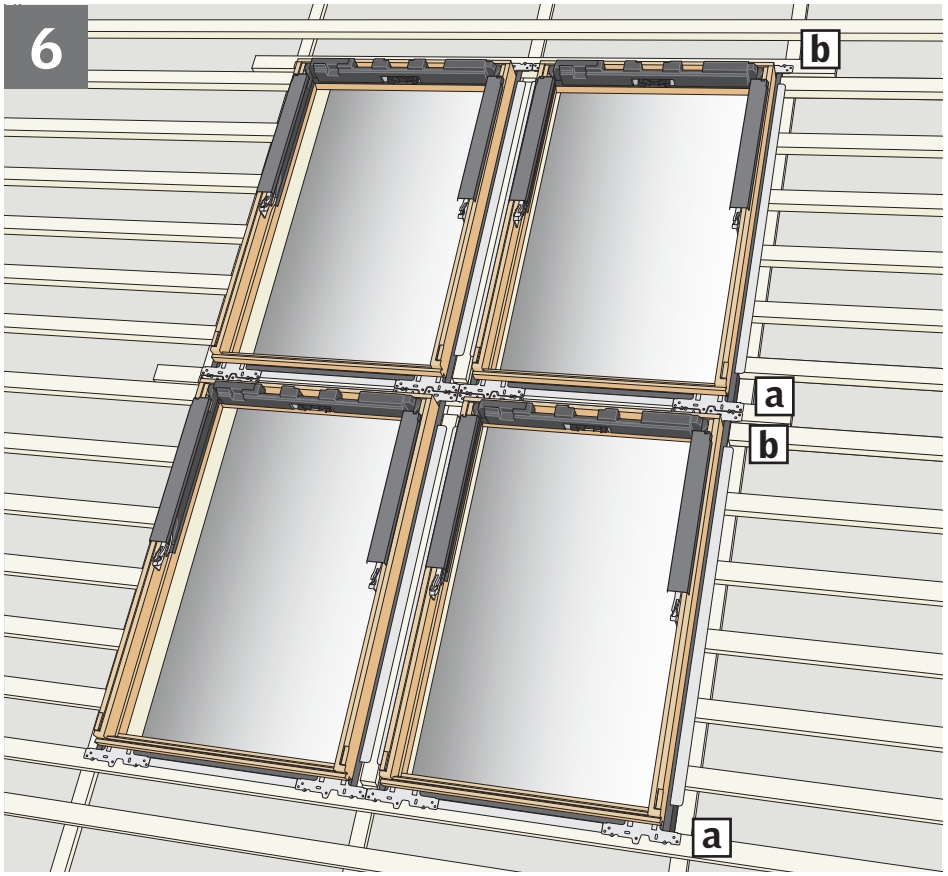
6
b
a
b
a

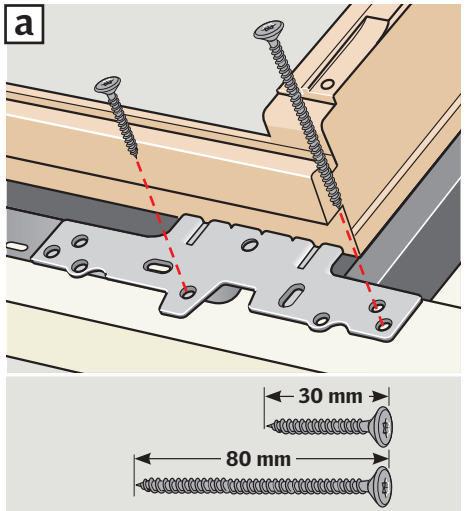
a
30 mm
80 mm

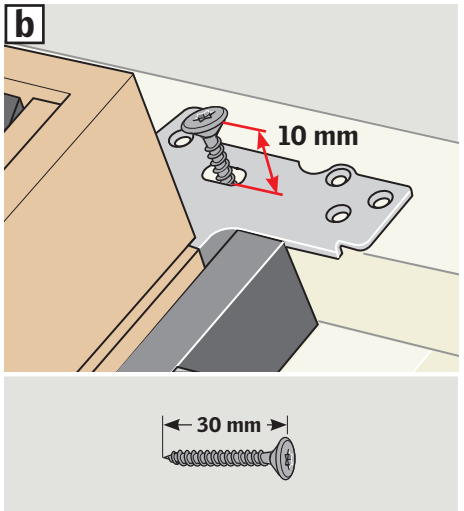
b
10 mm
30 mm

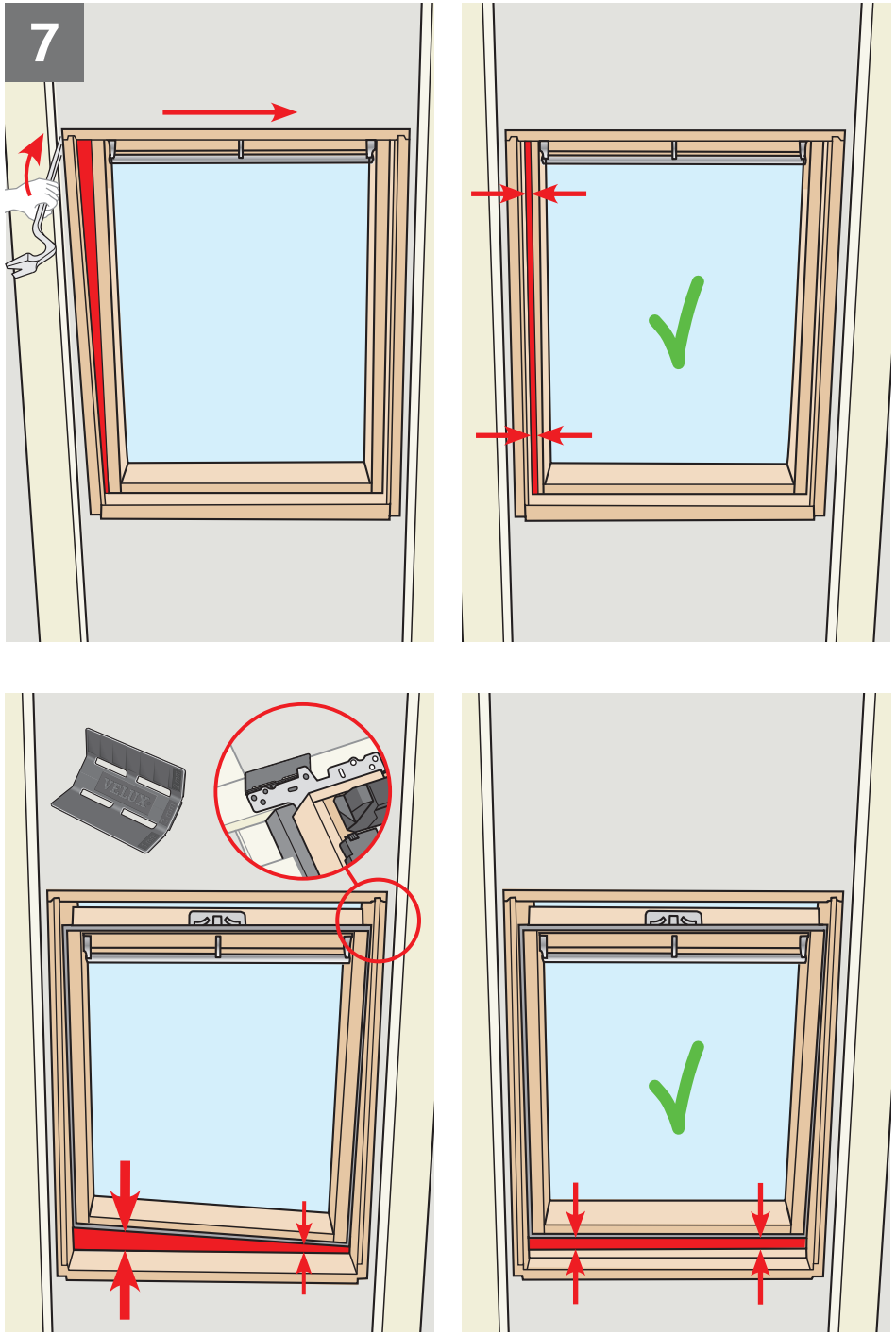
7
VELUX

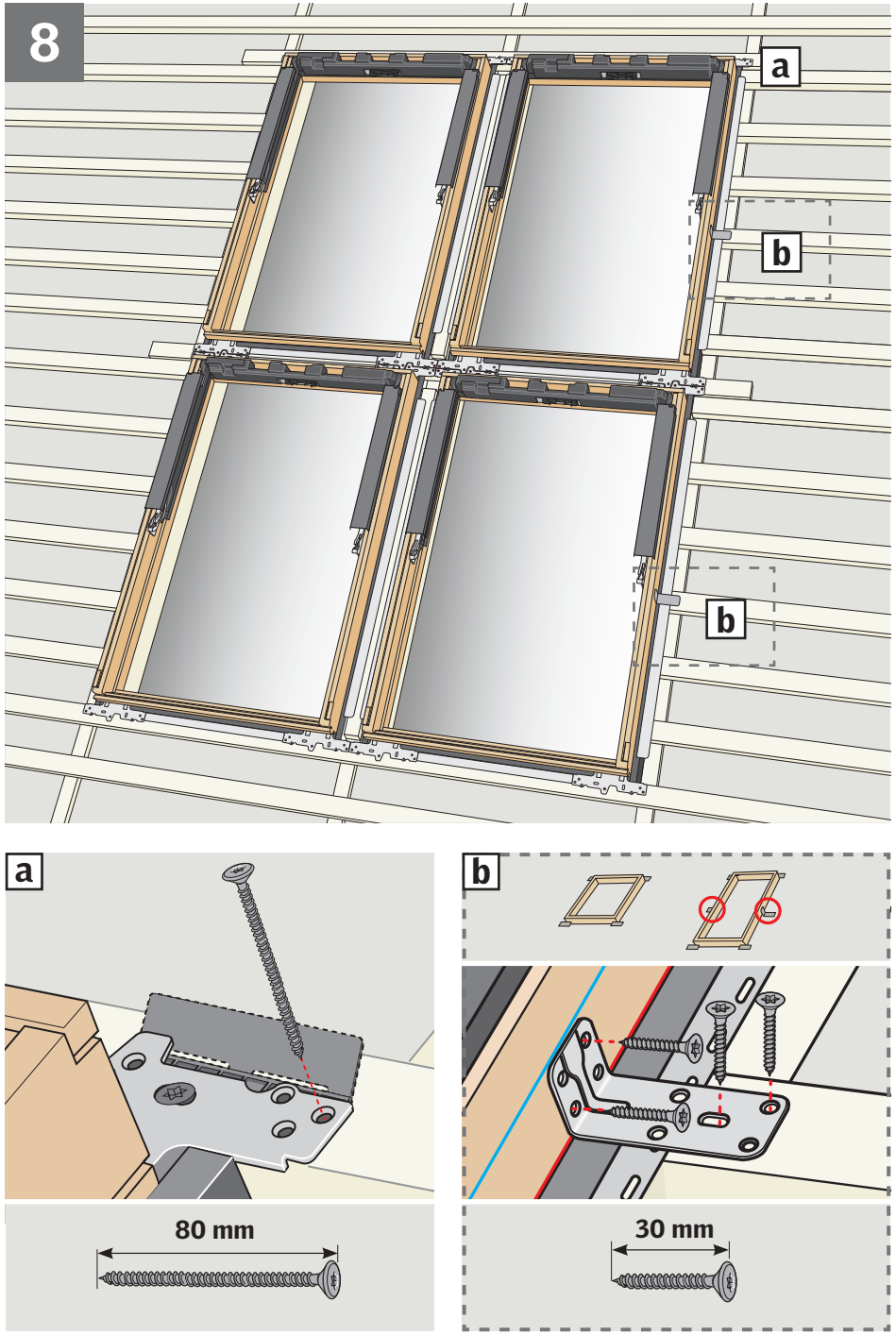
8
a
b
b
a
80 mm
b
30 mm

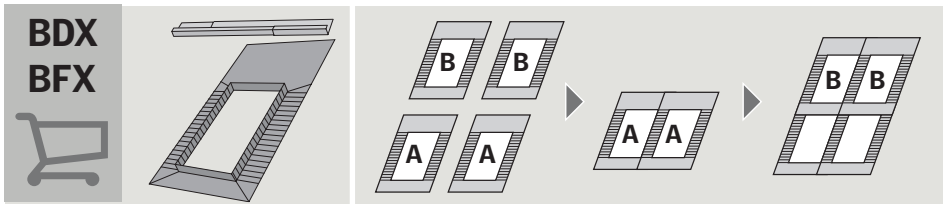
BDX
BFX
B
B
A
A
A
A
B
B

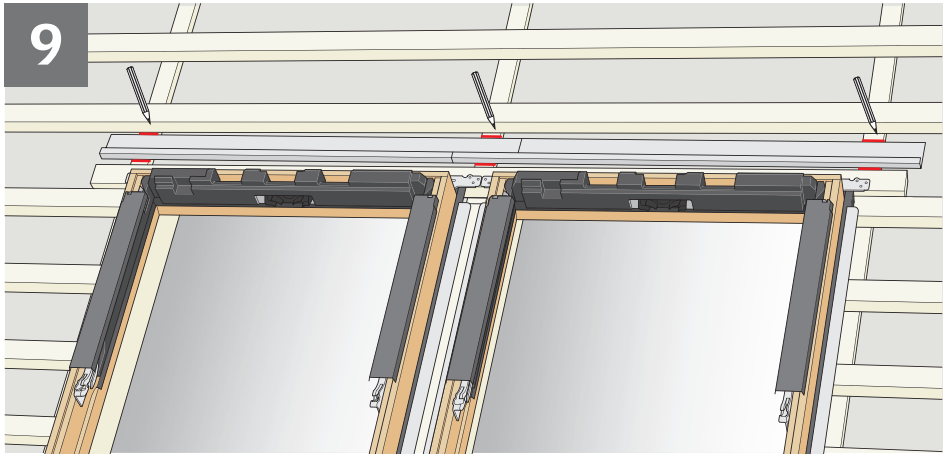
9

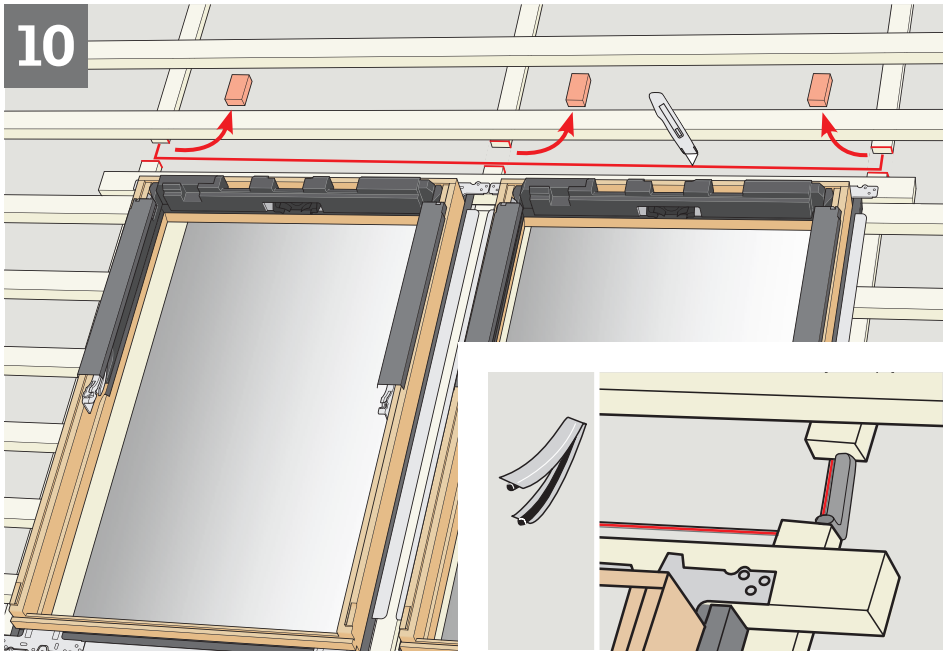
10

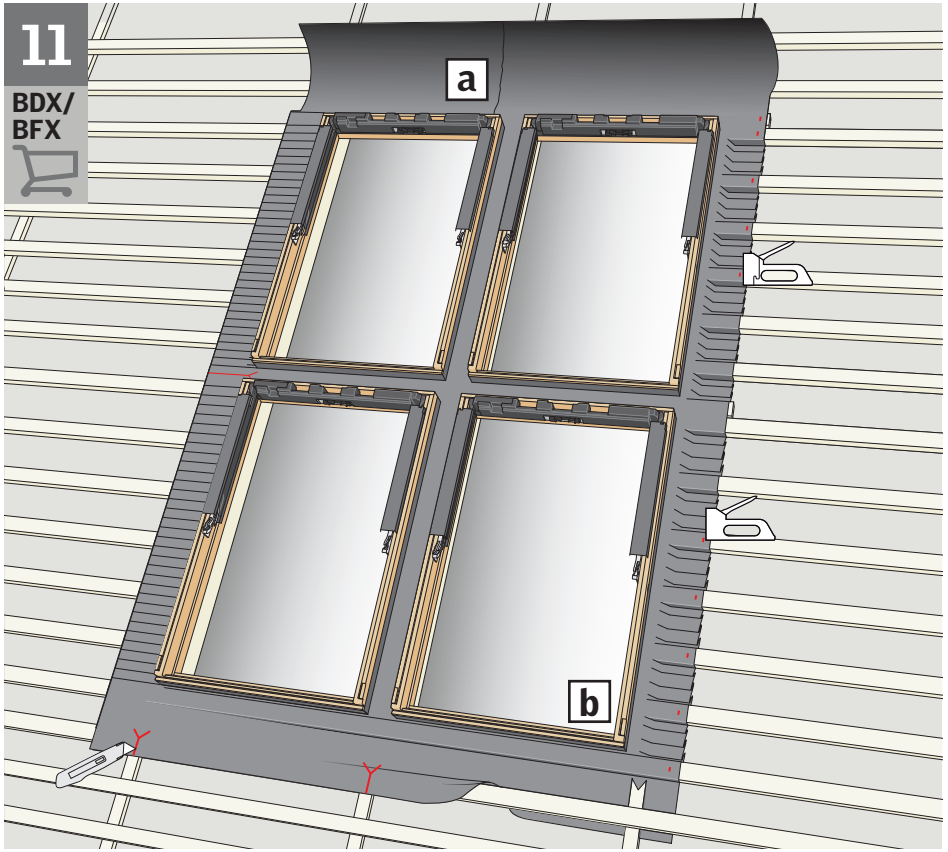
11
BDX/
BFX
a
b

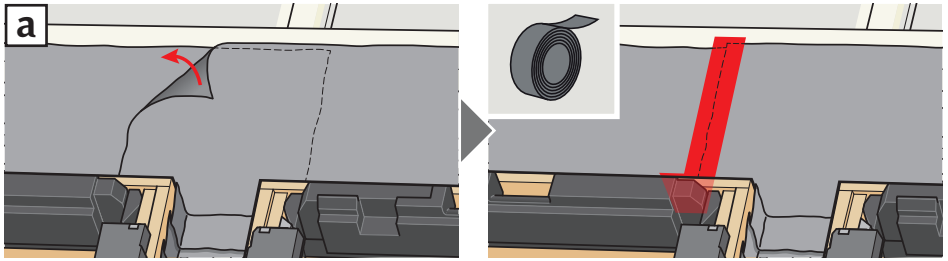
a

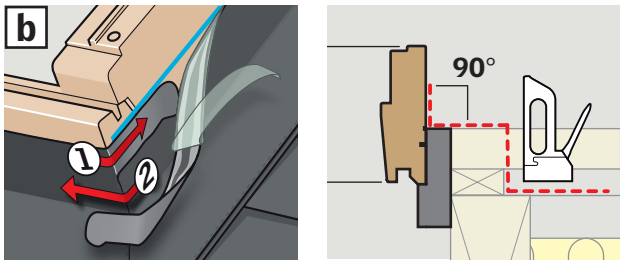
b
1
2
90°

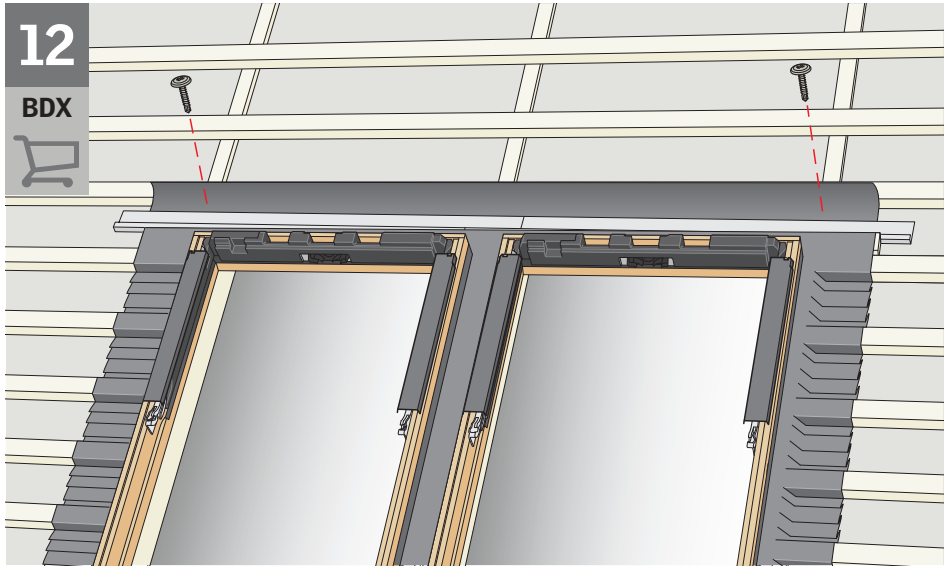
12
BDX

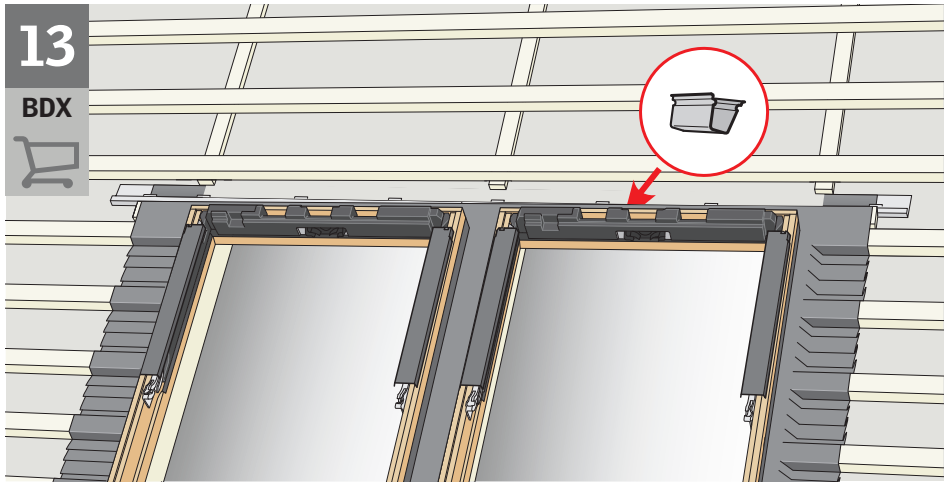
13
BDX

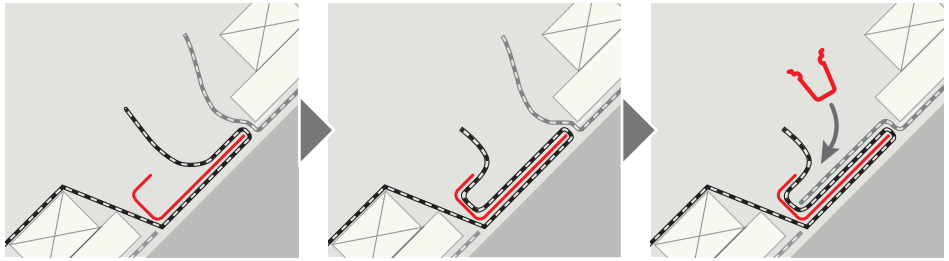

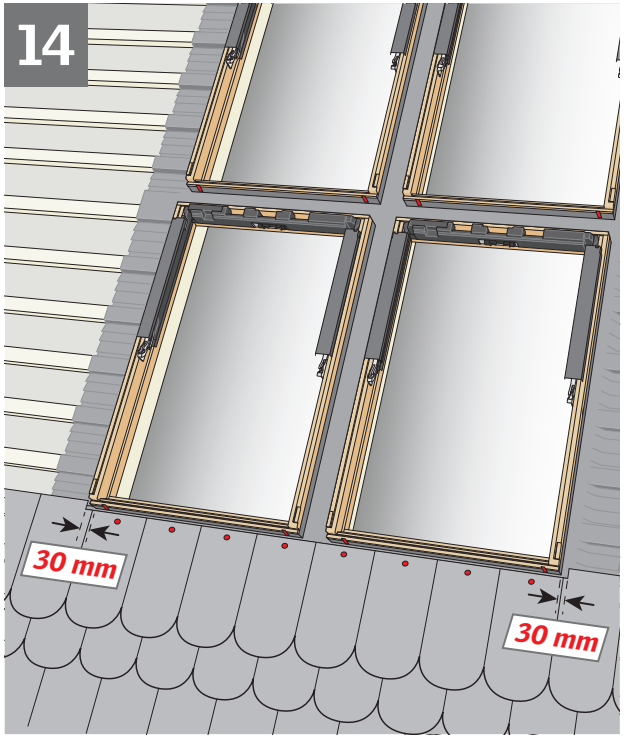
14
30 mm
30 mm

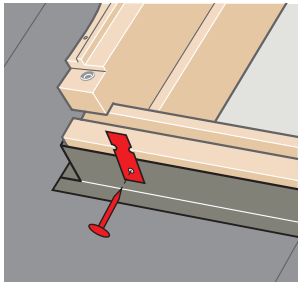

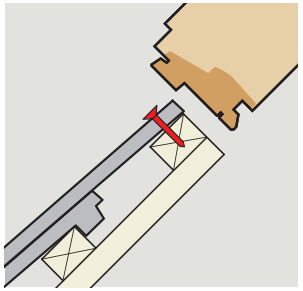

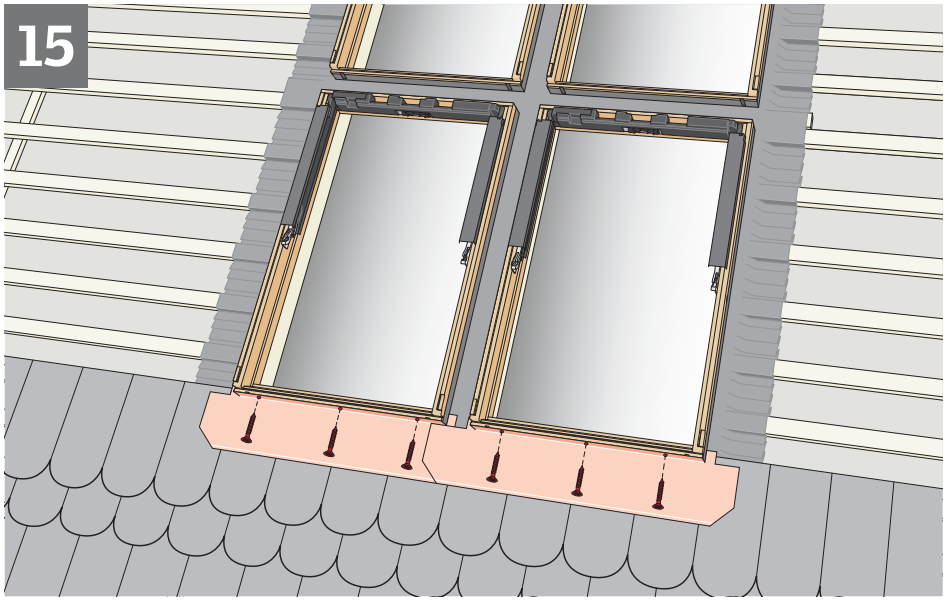
15

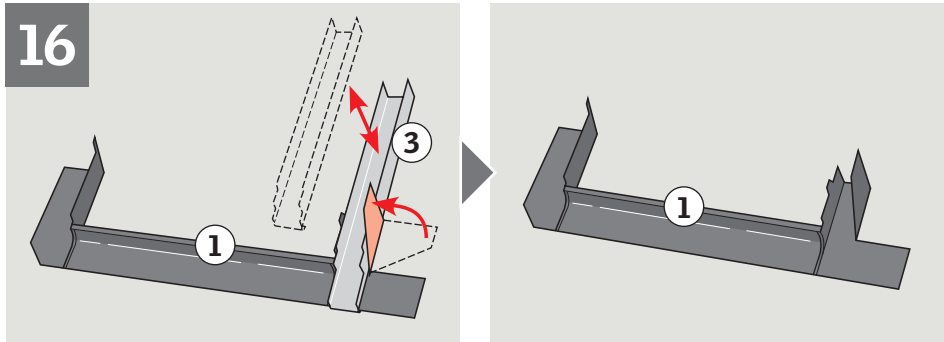
16
1
3
1

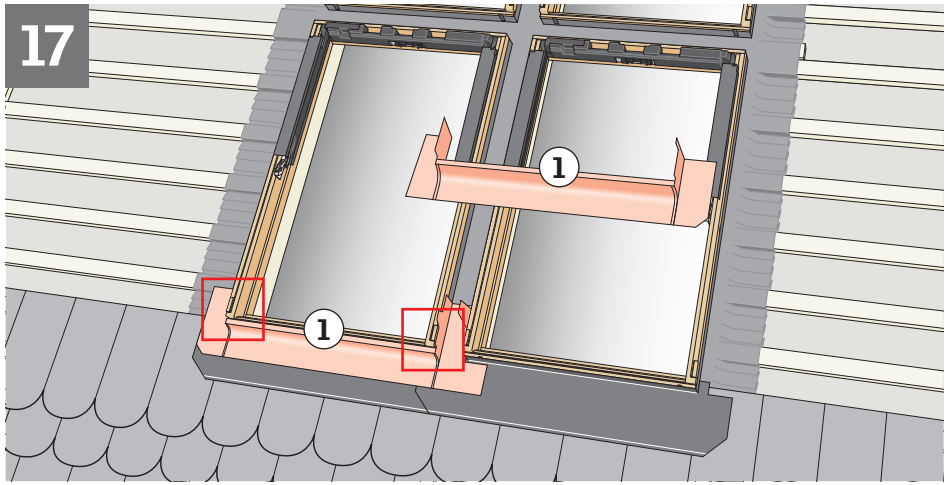
17
1
1

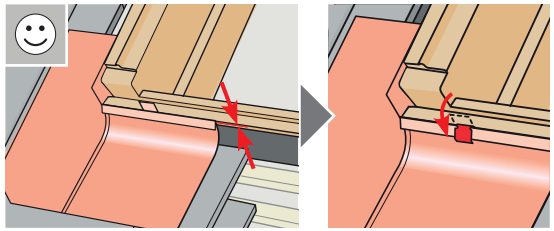

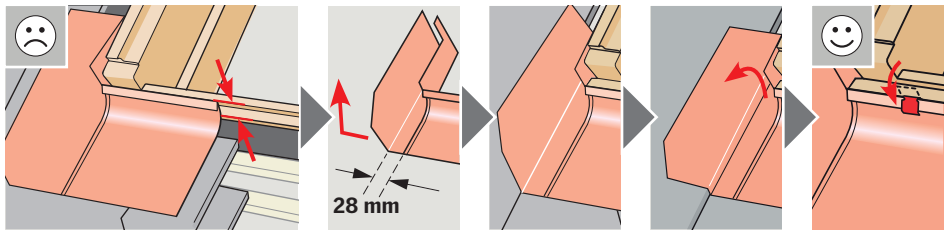
28 mm

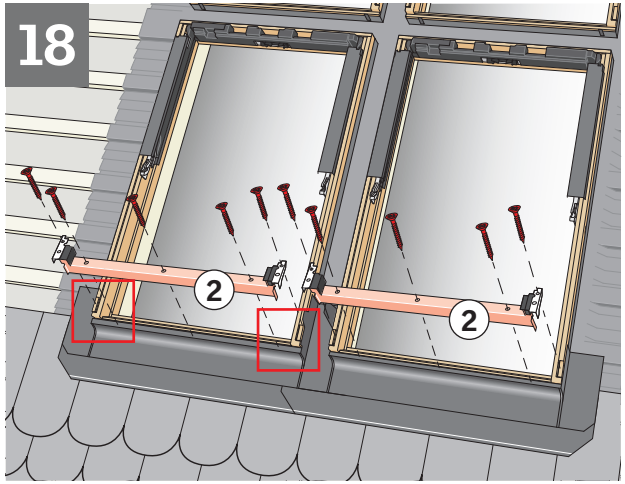
18
2
2

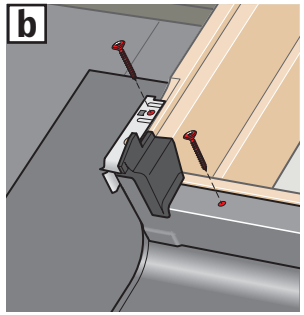
b

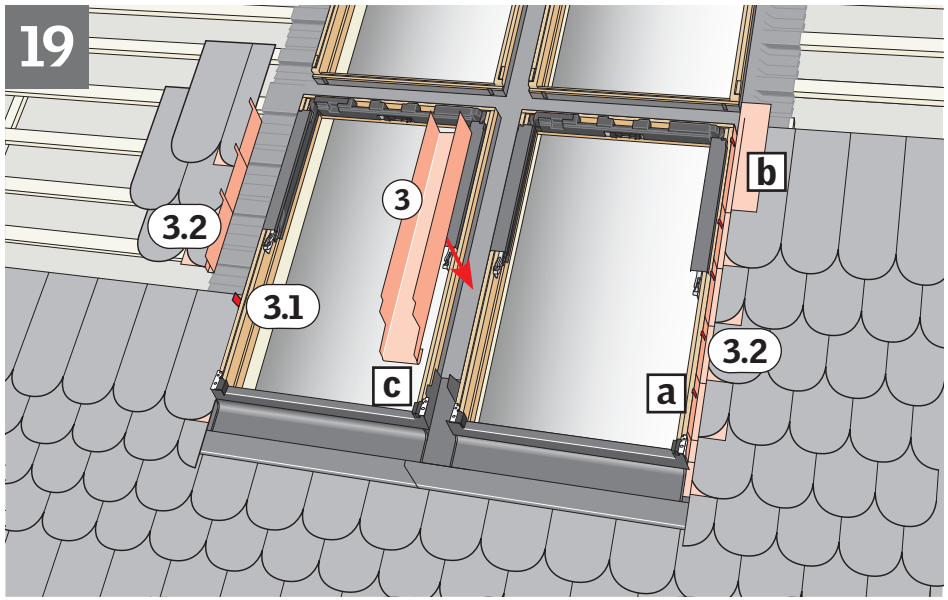
19
3.2
3
3.1
c
b
3.2
a

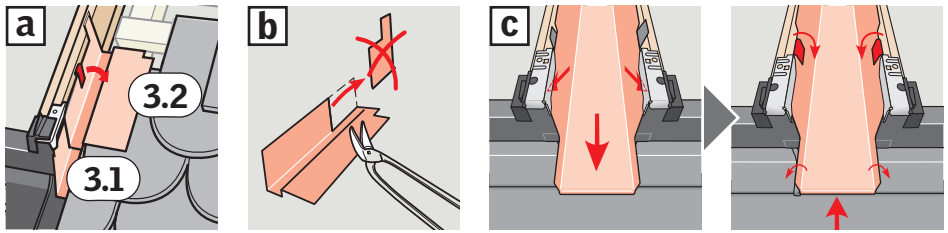
a
3.2
3.1
b
c

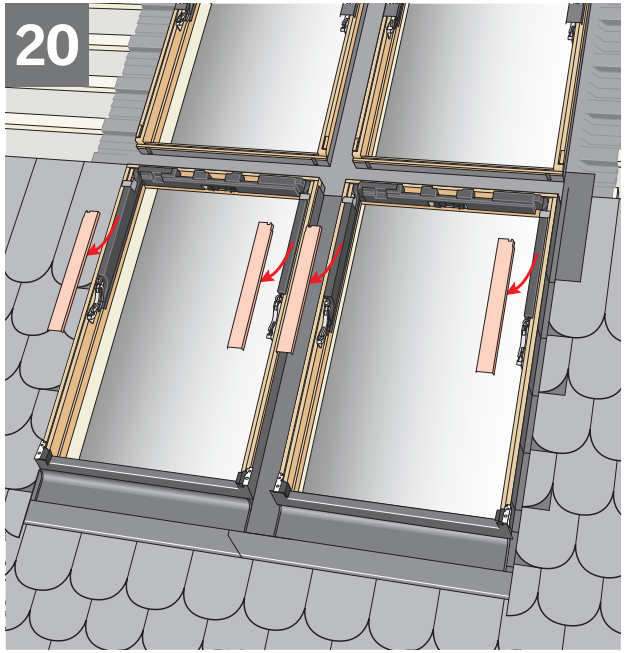
20

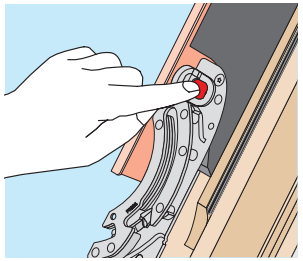

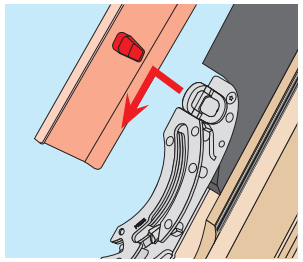

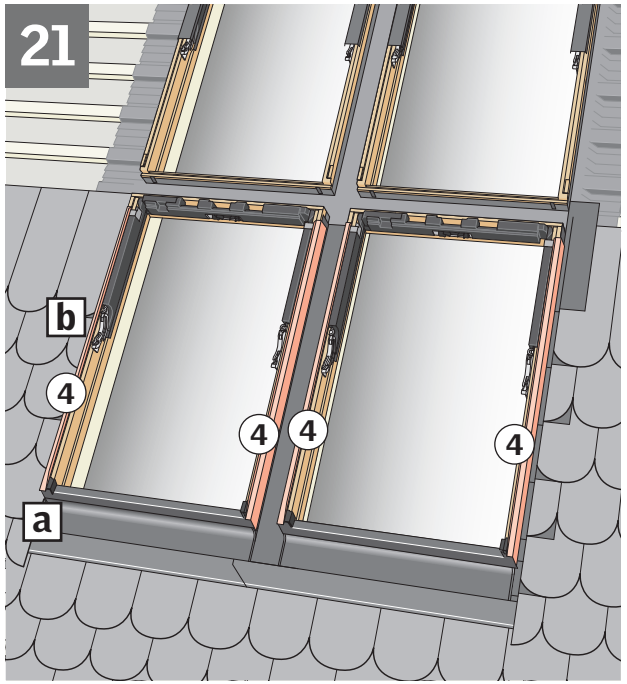
21
b
4
4
4
4
a

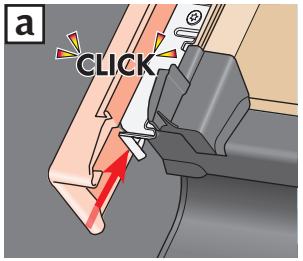
a
CLICK

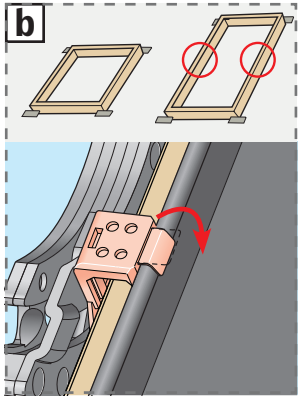
b

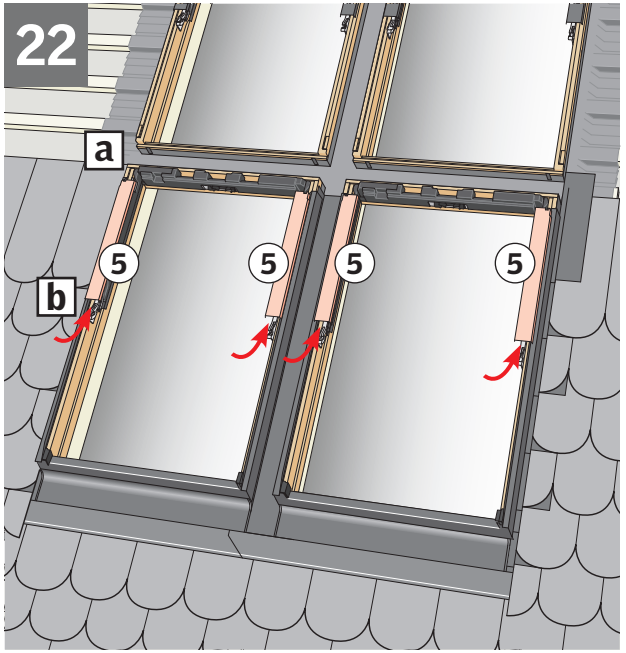
22
a
5
5
5
5
b

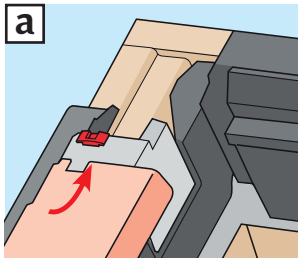
a

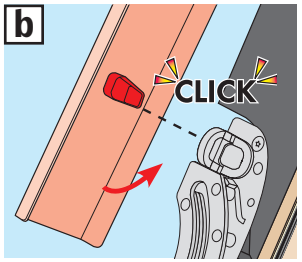
b
CLICK

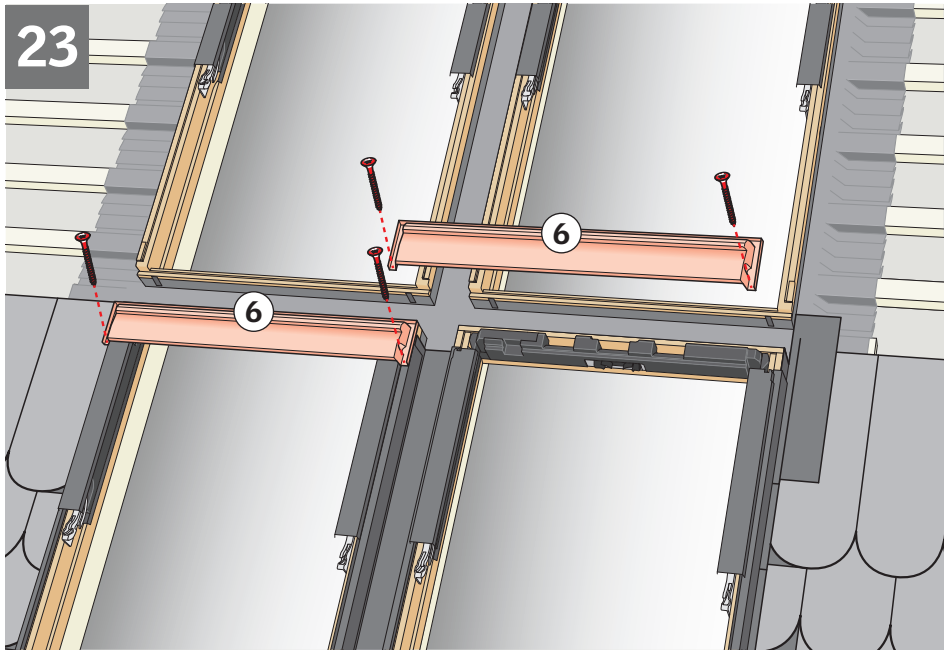
23
6
6

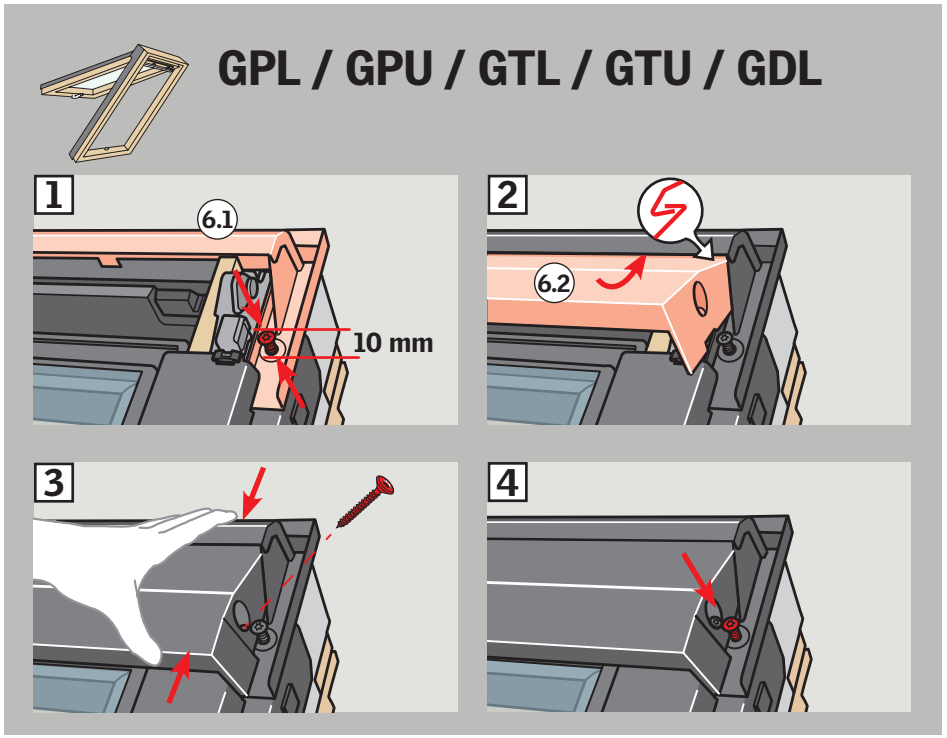
GPL / GPU / GTL / GTU / GDL
1
6.1
10 mm
2
6.2
3
4

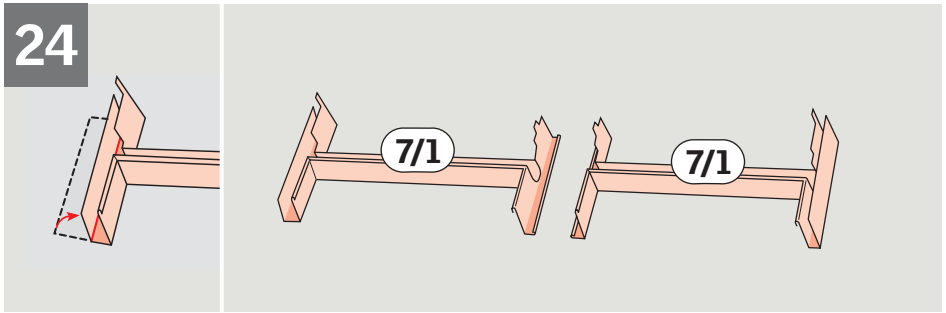
24
7/1
7/1

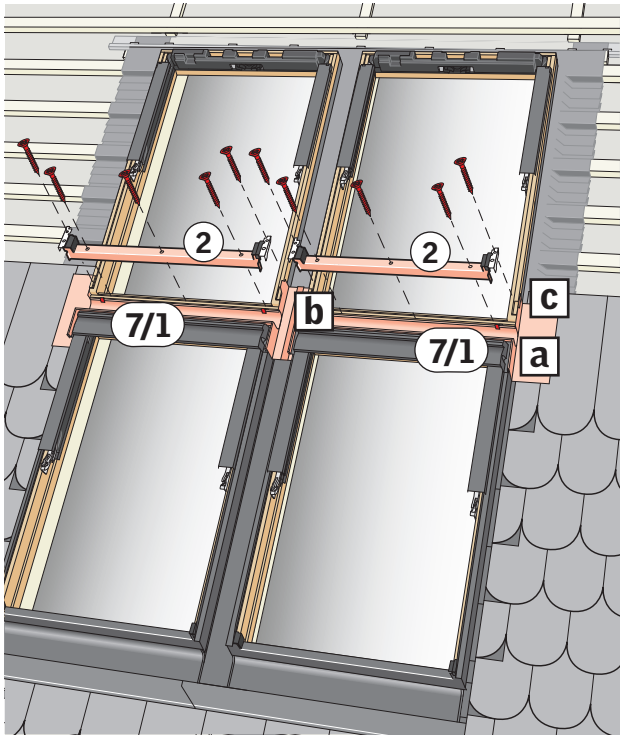
2
2
7/1
b
7/1
c
a

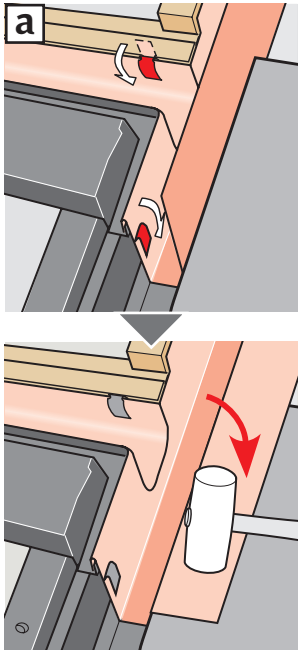
a

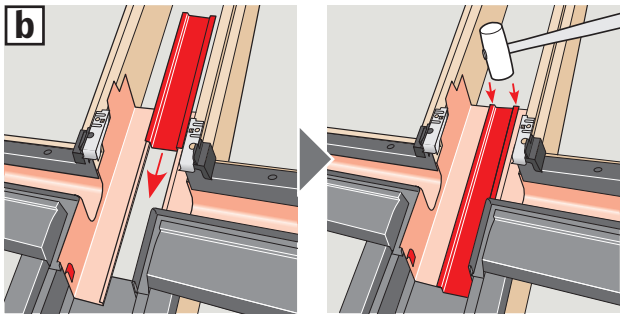
b

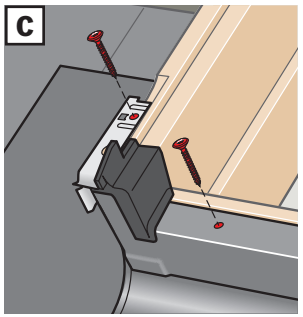
c

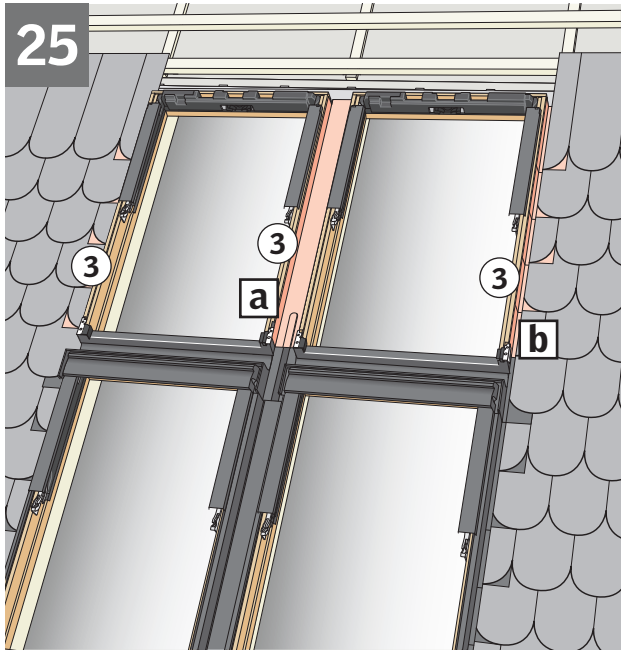
25
3
3
3
a
b

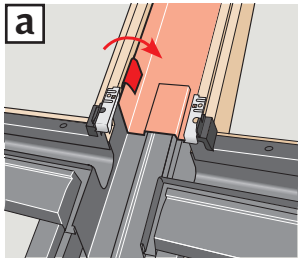
a

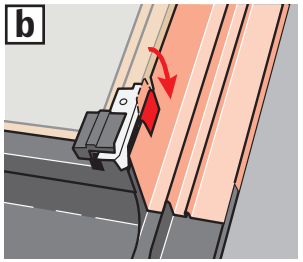
b

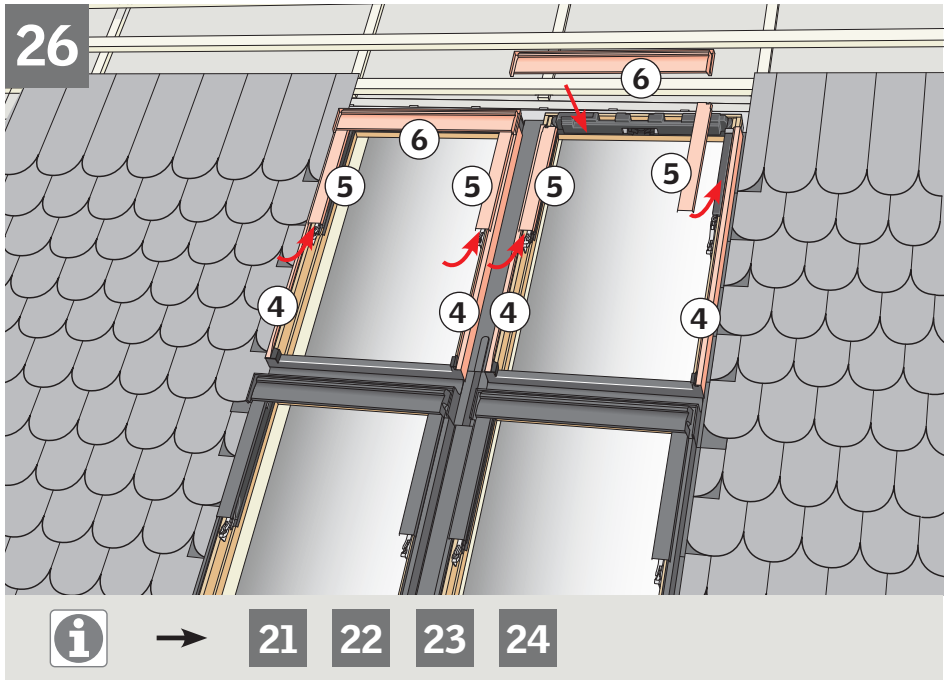
26
6
6
5
5
5
5
4
4
4
4
21
22
23
24

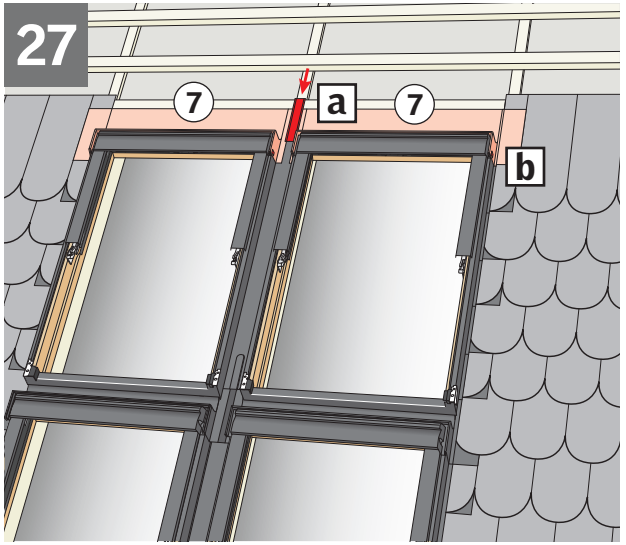
27
7
a
7
b

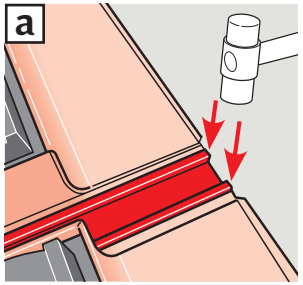
a

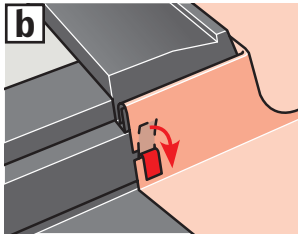
b

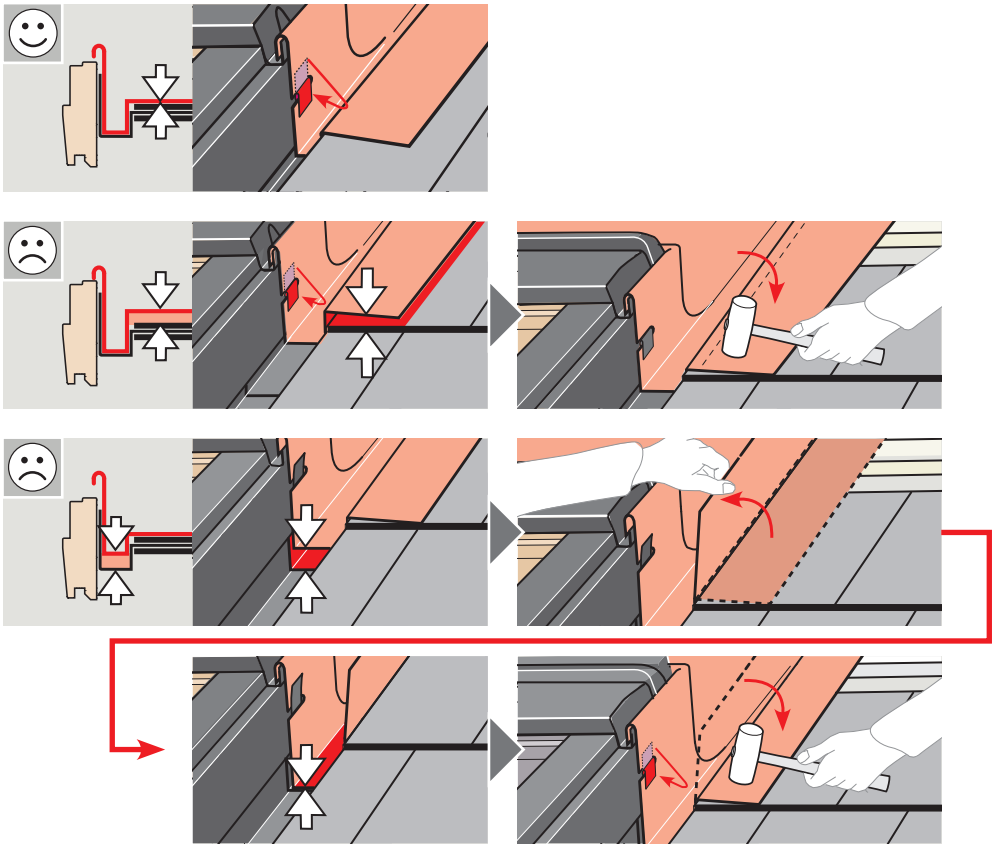

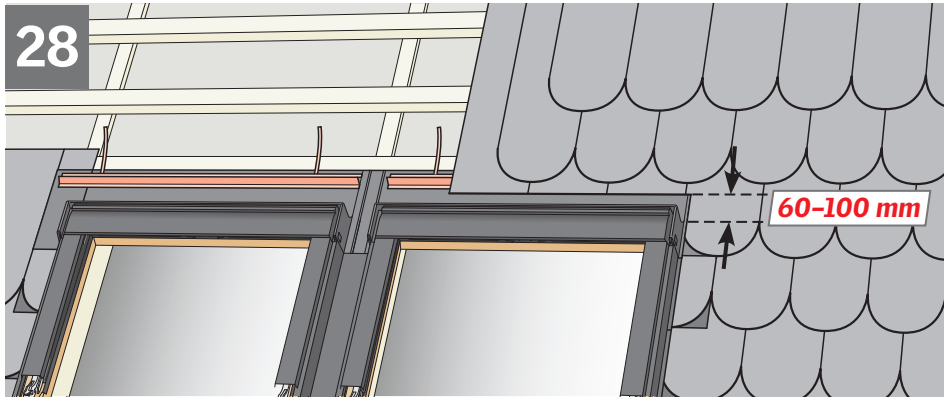
28
60–100 mm

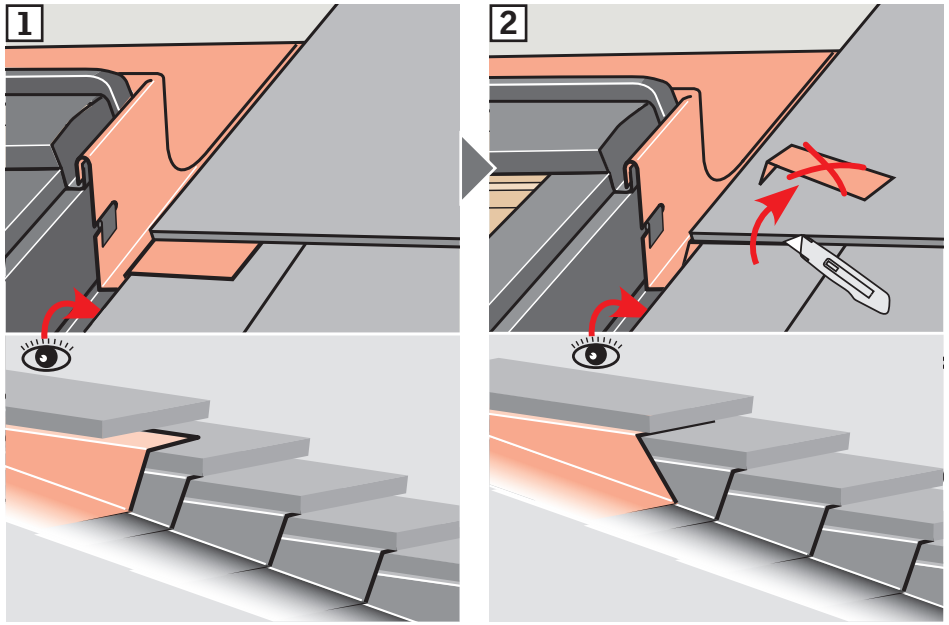
1
2

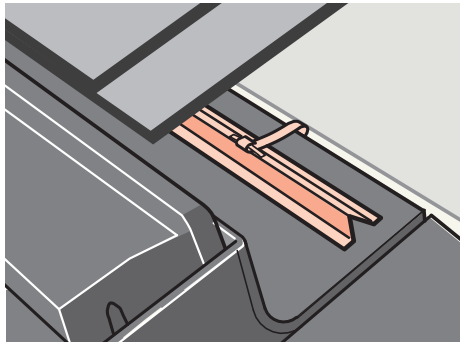

VELUX®

www.velux.com

velux.com/contact

INSTALLATION INSTRUCTIONS FOR EKB. ©2012, 2025 VELUX GROUP ®VELUX AND THE VELUX LOGO ARE REGISTERED TRADEMARKS USED UNDER LICENCE BY THE VELUX GROUP