# CFP + ISD 1093 / ISD 2093 / ISD
# CFP + ZCE + ISD 1093 / ISD 2093 / ISD

0°–15°

## ISD 1093

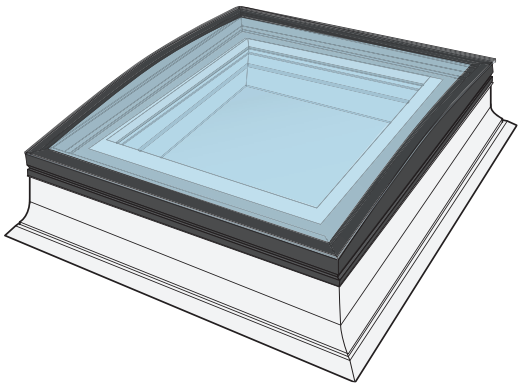

2°–15°

## ISD 2093

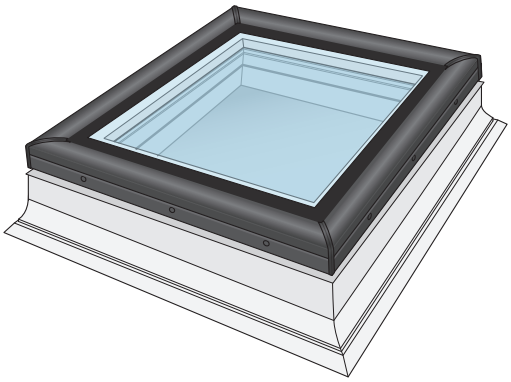

0°–15°

## ISD

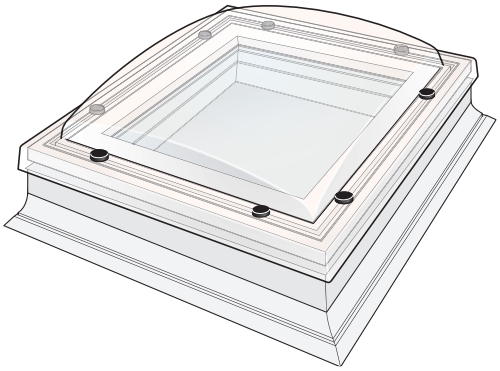

VELUX®

VAS 451997-2025-03

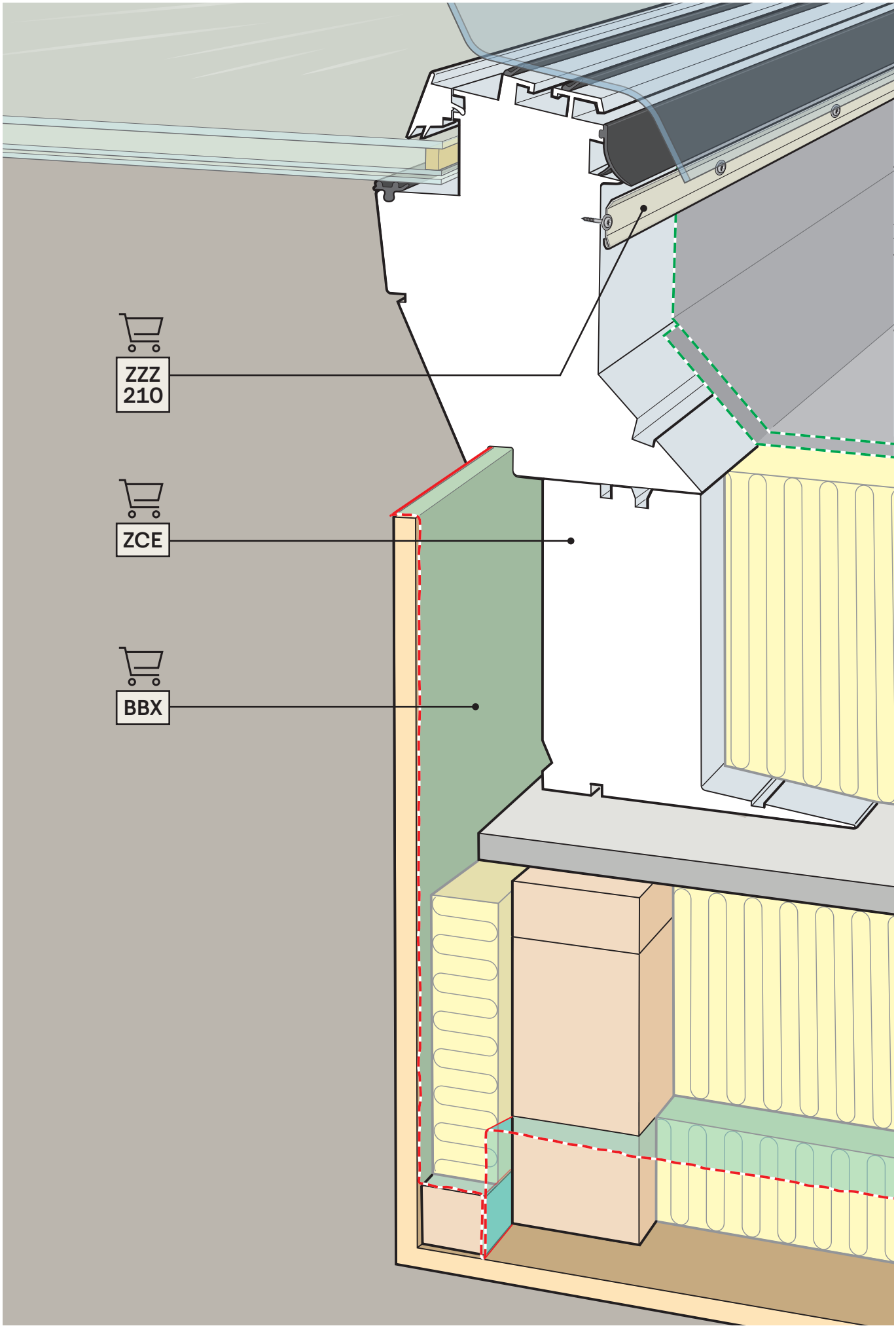
ZZZ
210
ZCE
BBX

# CFP

Pages
4-9

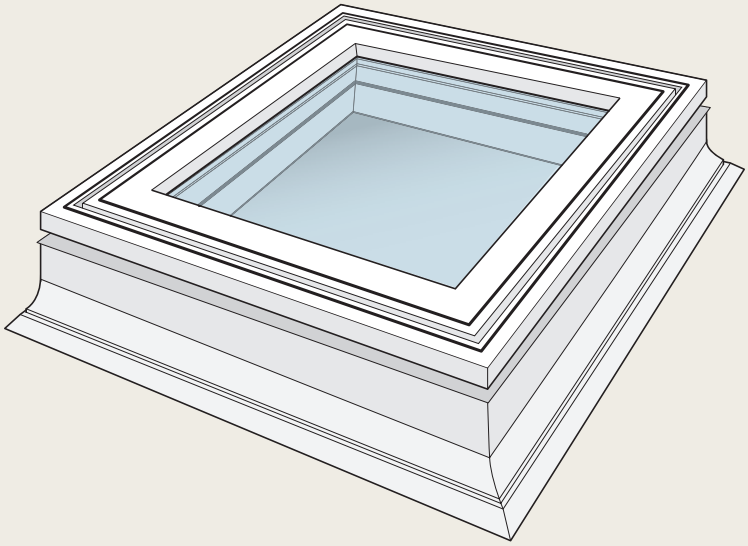

# CFP + ZCE

Pages
10-19

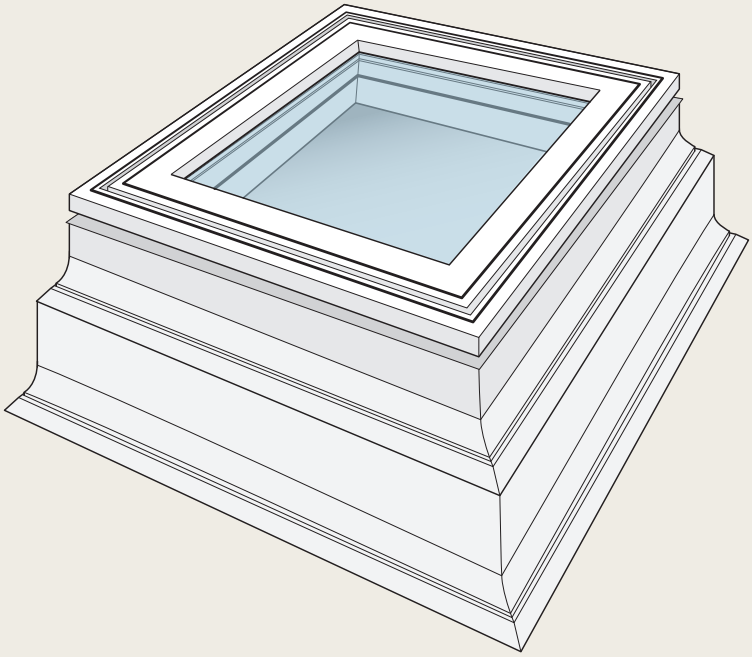

1

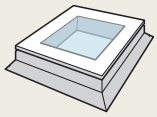

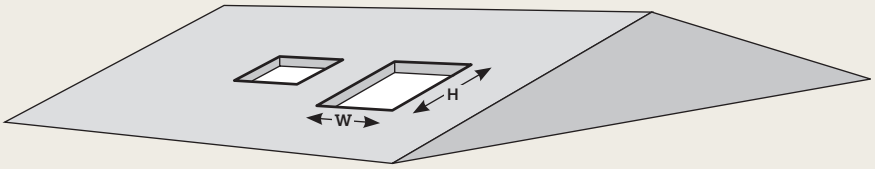


| CFP | W mm | H mm |
|---|---|---|
| 060060 | 600-610 | 600-610 |
| 080080 | 800-810 | 800-810 |
| 060090 | 600-610 | 900-910 |
| 090090 | 900-910 | 900-910 |
| 090120 | 900-910 | 1200-1210 |
| 100100 | 1000-1010 | 1000-1010 |
| 100150 | 1000-1010 | 1500-1510 |
| 120120 | 1200-1210 | 1200-1210 |
| 150150 | 1500-1510 | 1500-1510 |

BBX

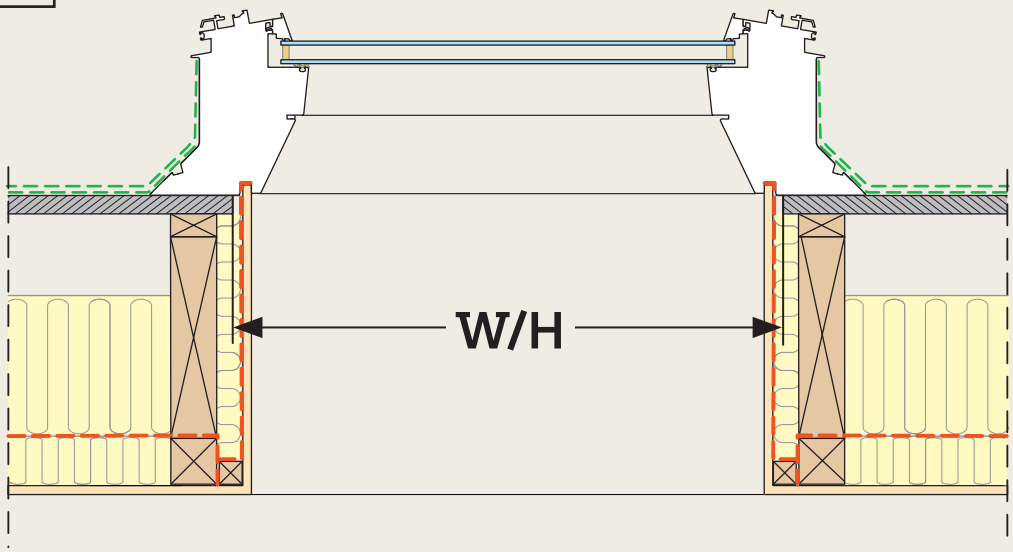


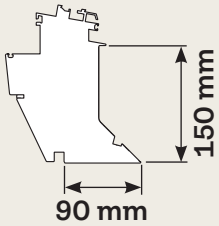


BBX

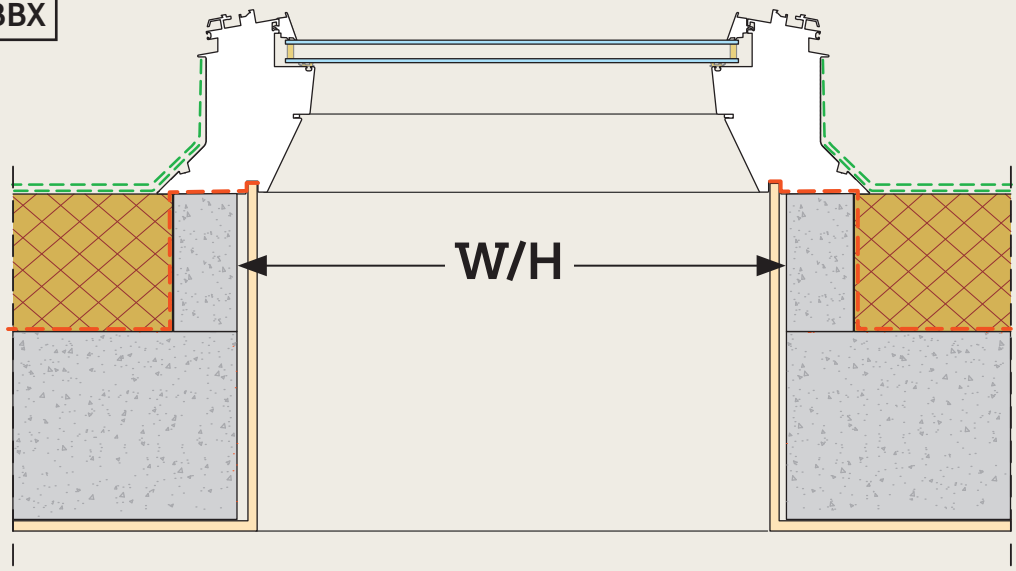


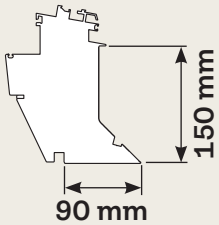

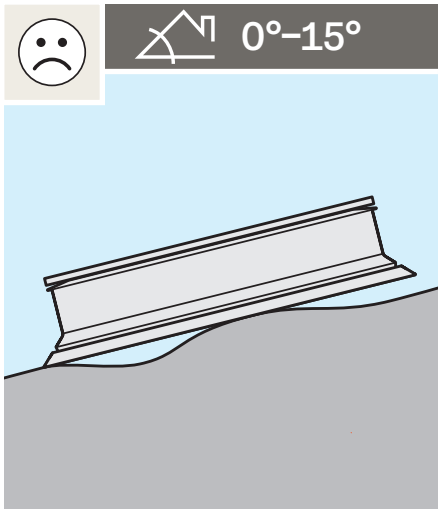
0°–15°

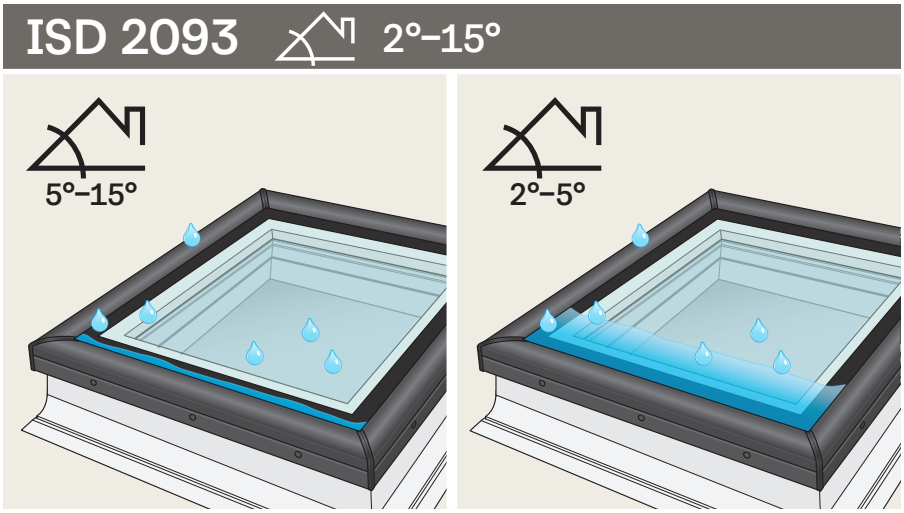
ISD 2093
2°–15°
5°–15°
2°–5°

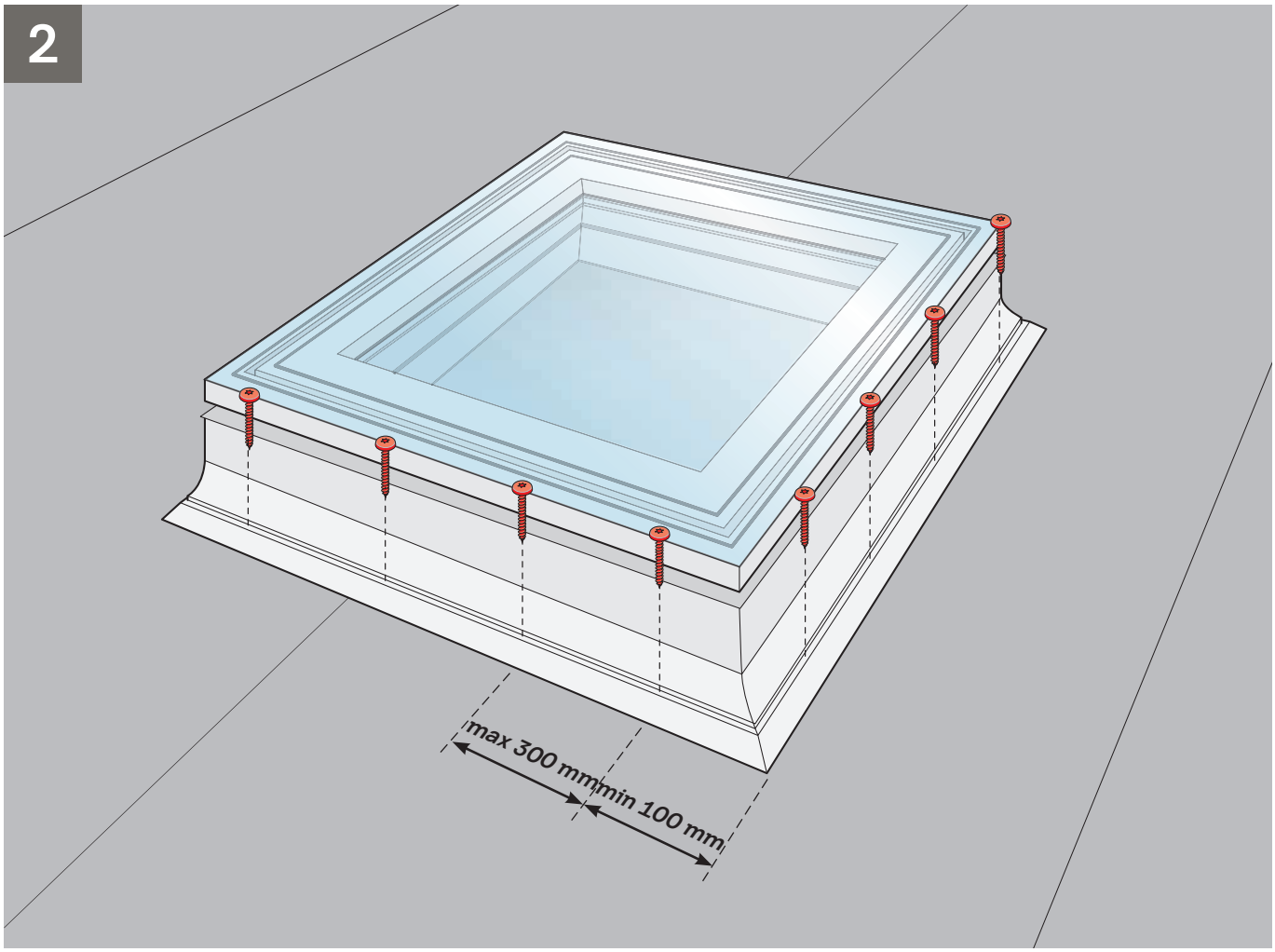
2
max 300 mm
min 100 mm

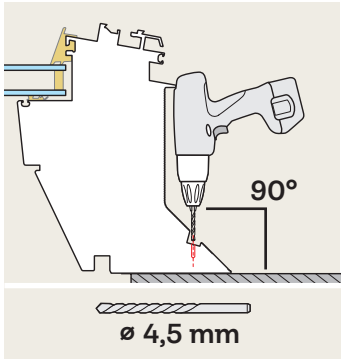
90°
ø 4,5 mm

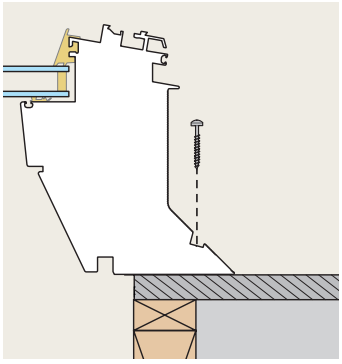

3

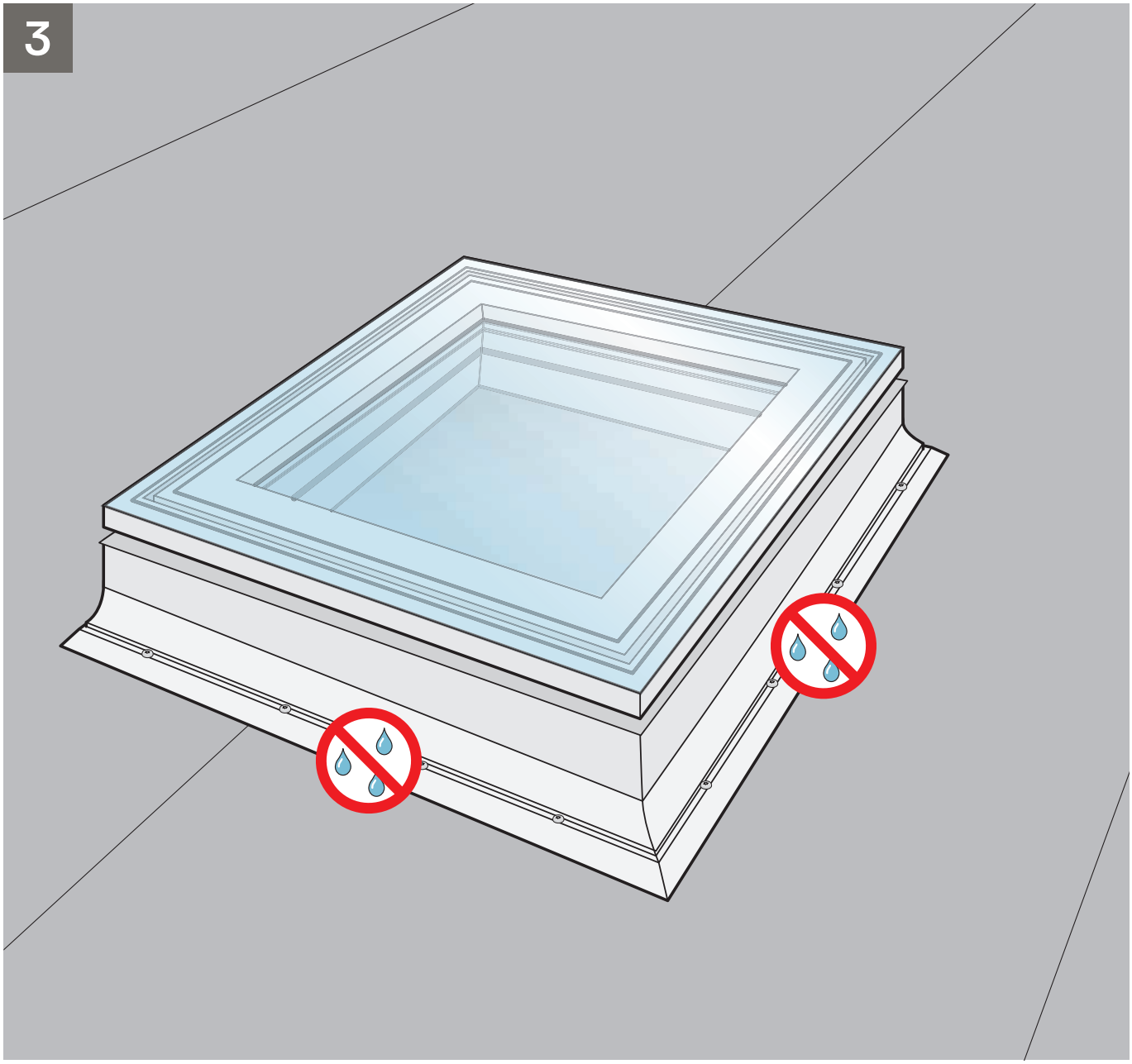

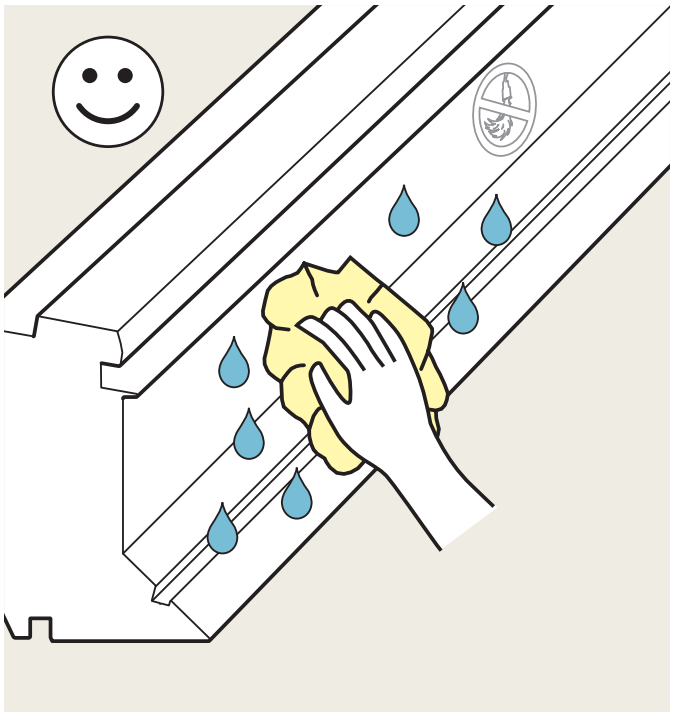

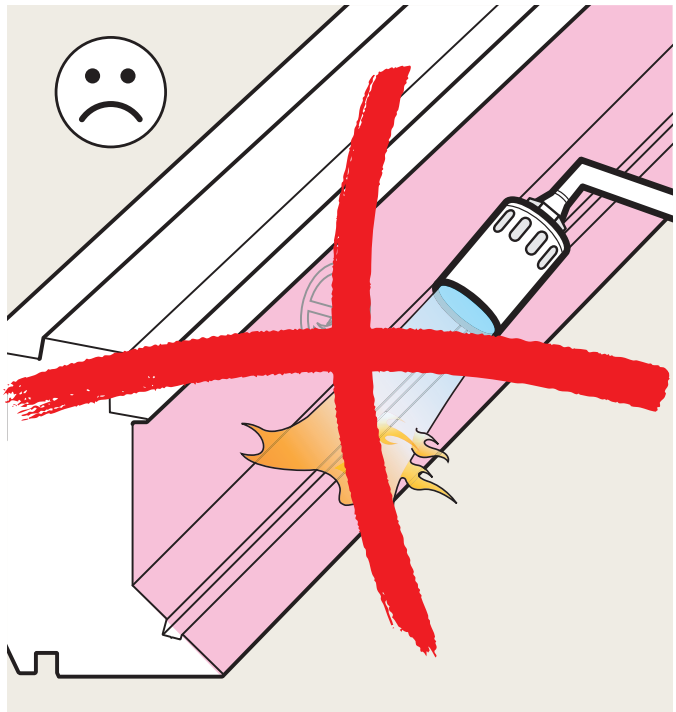

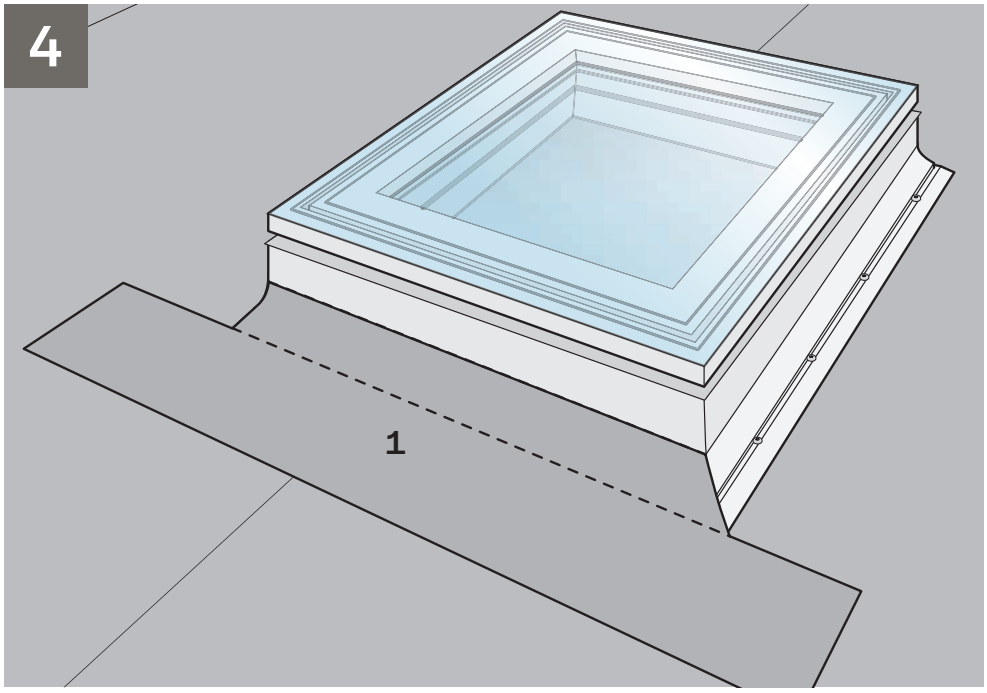
4
1

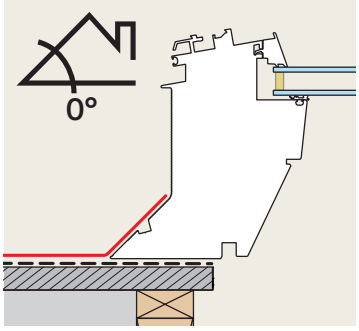
0°

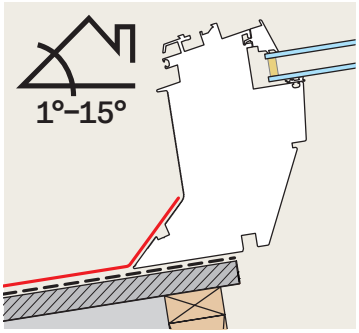
1°–15°

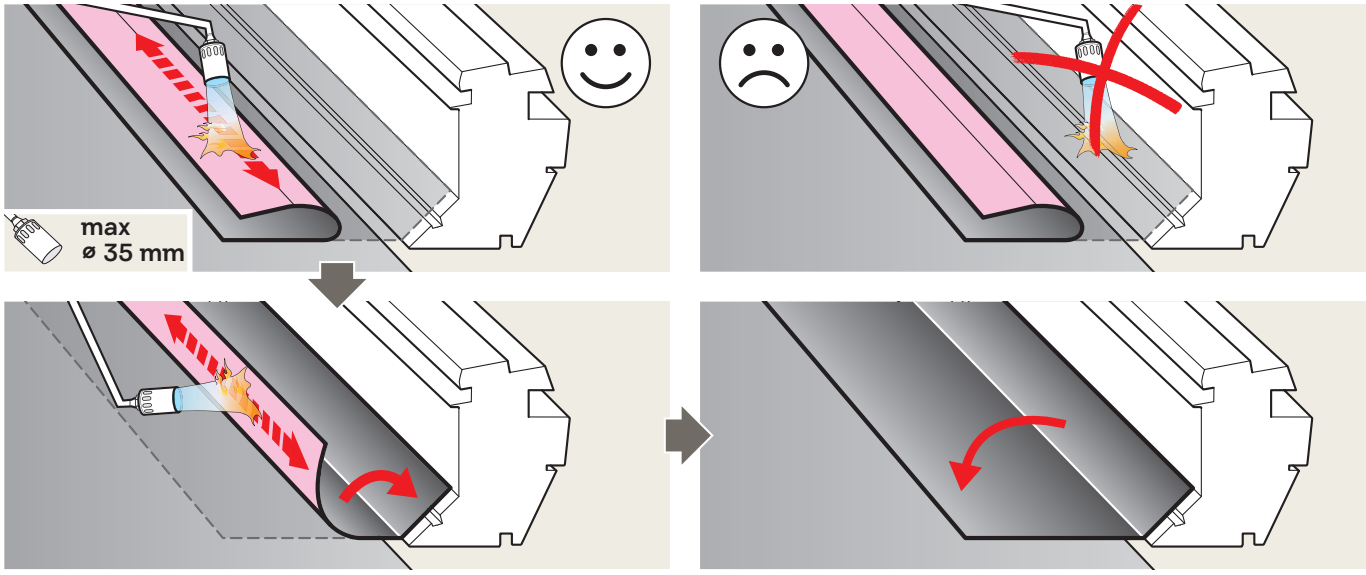
max
ø 35 mm

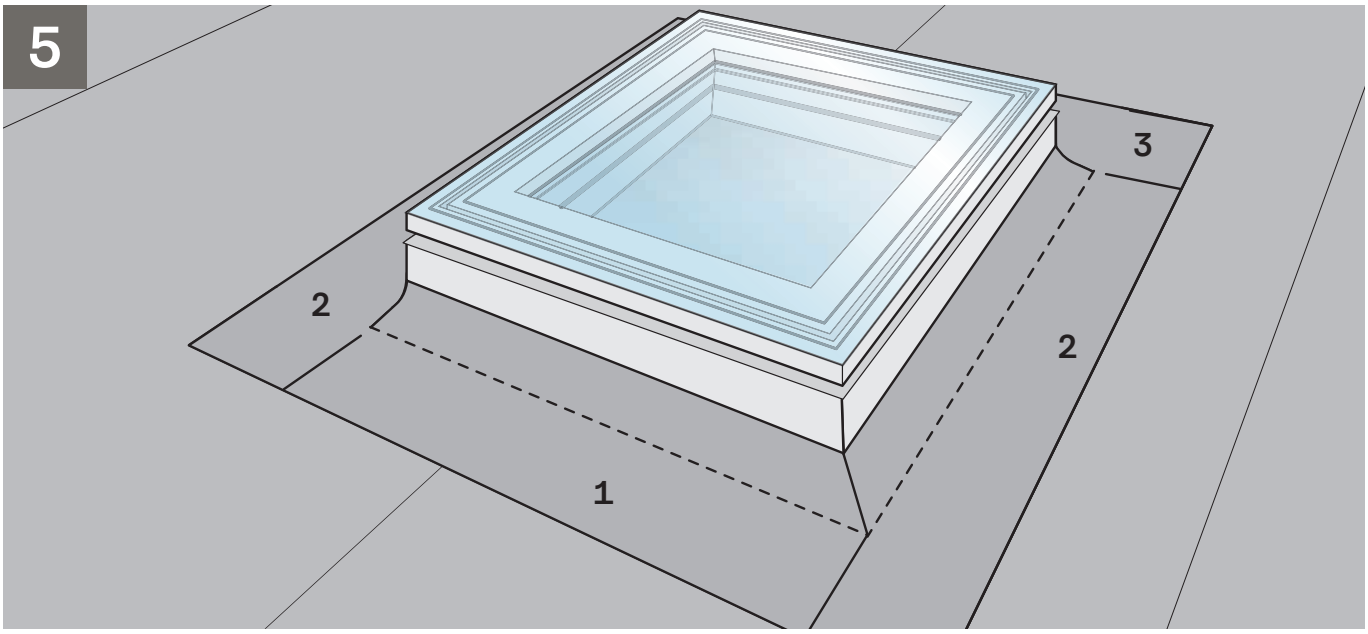
5
1
2
2
3

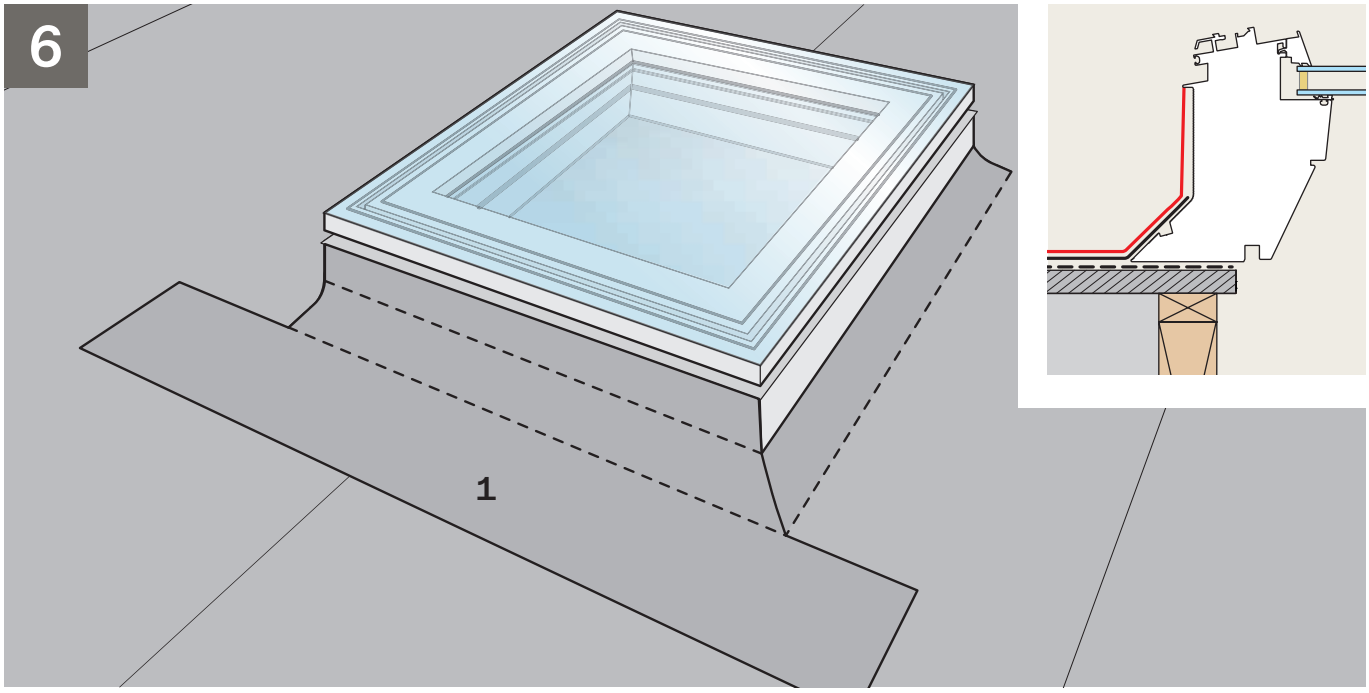
6
1

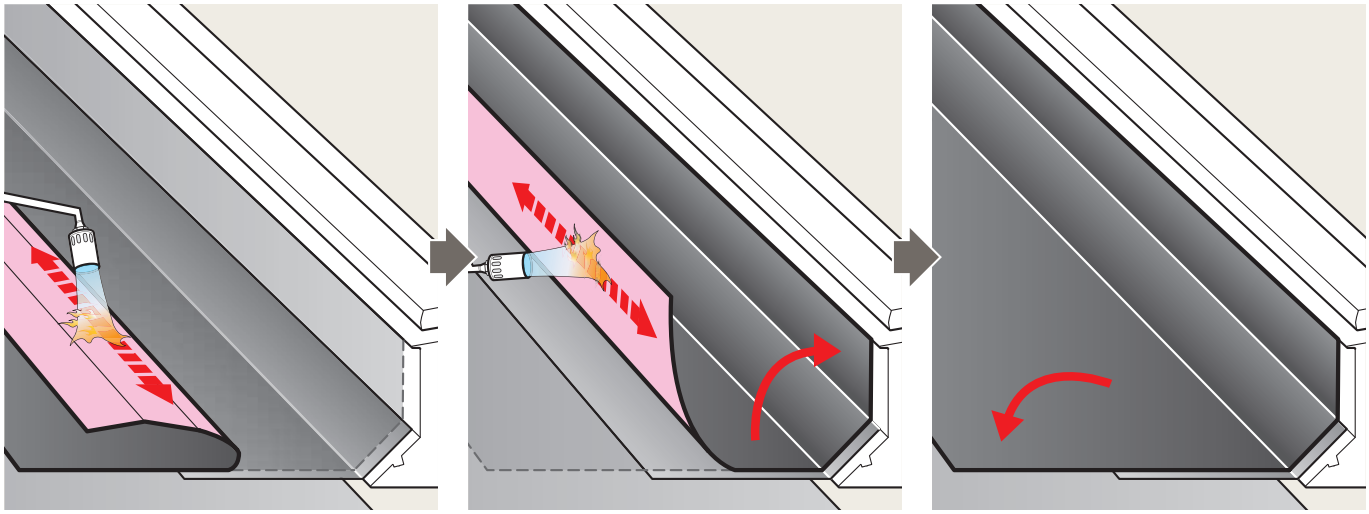

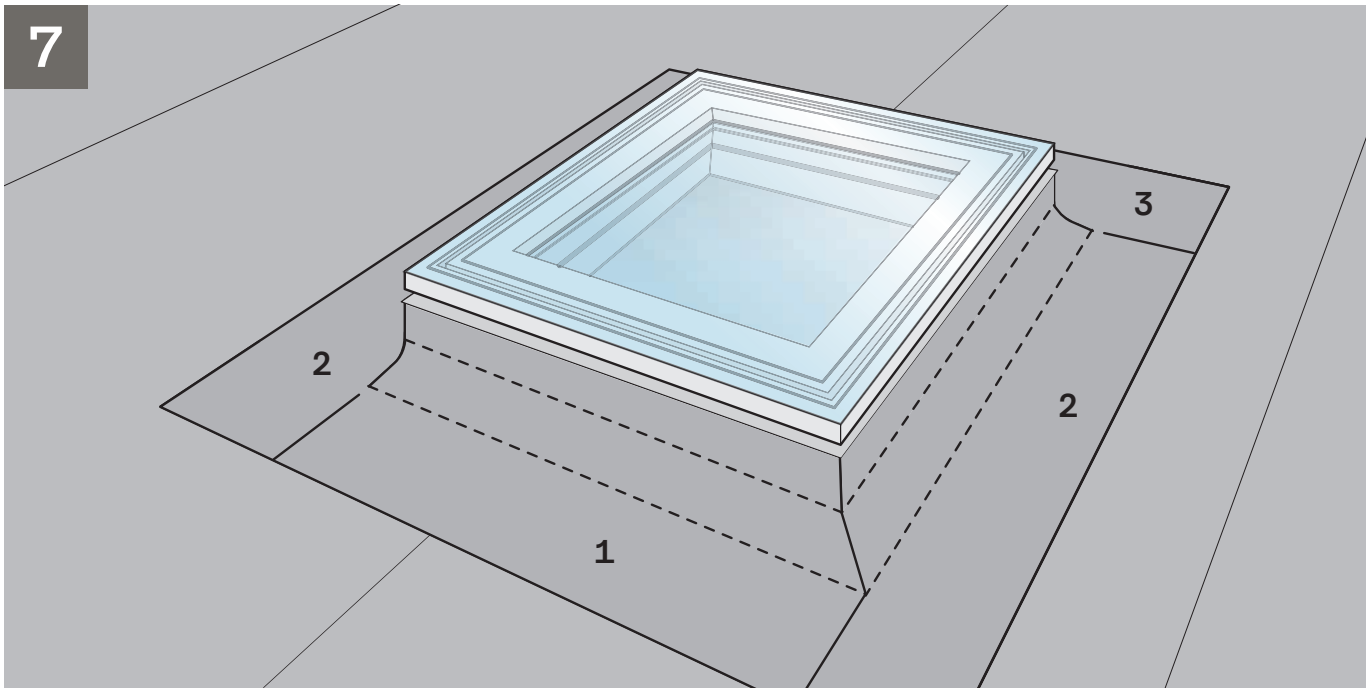
7
1
2
2
3

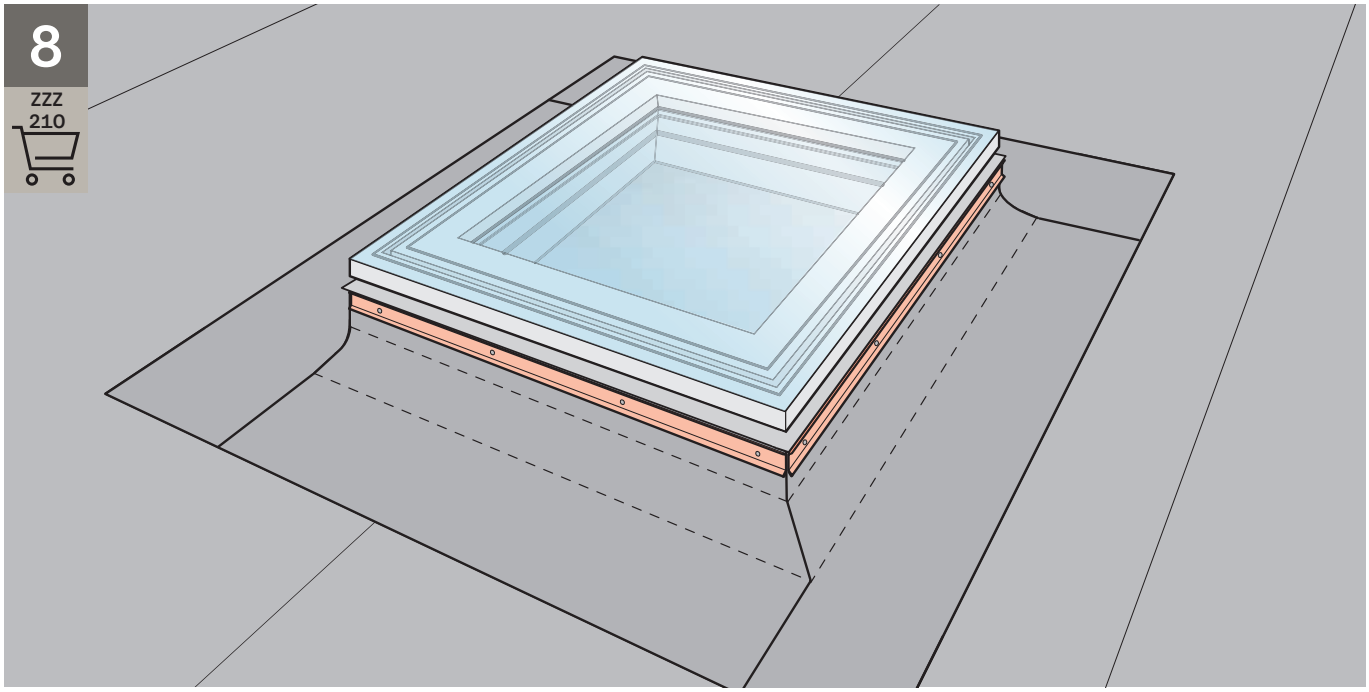


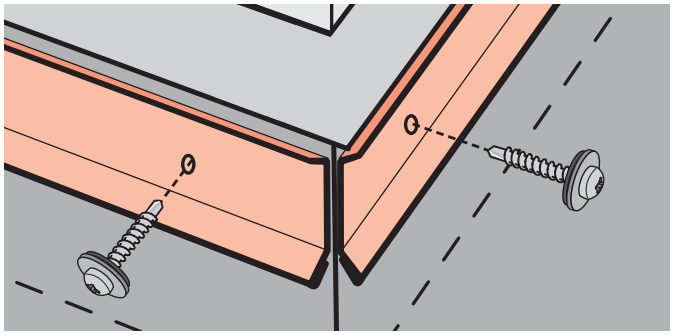

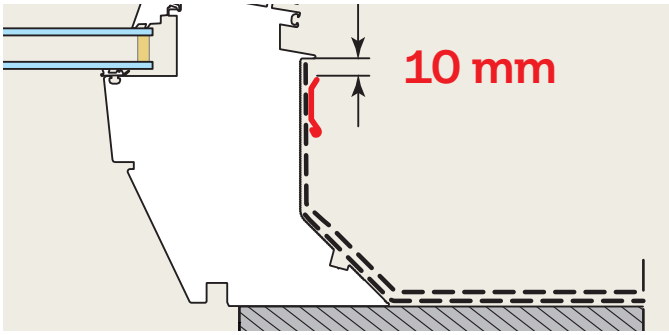


## ISD 1093

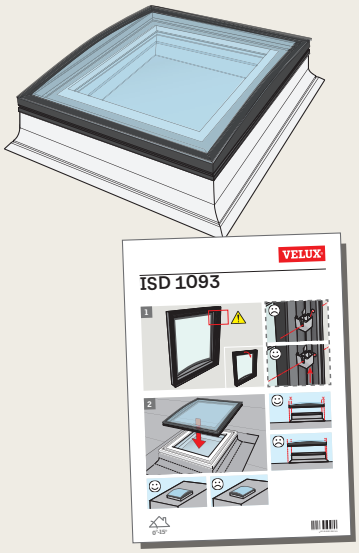


## ISD 2093

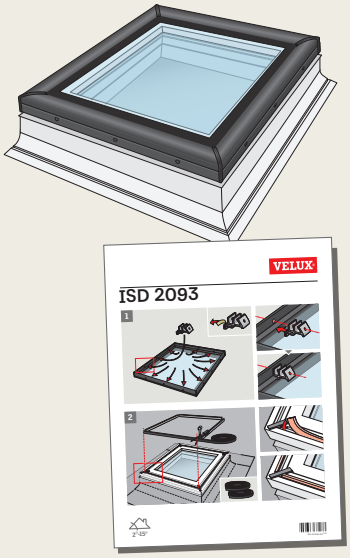


## ISD

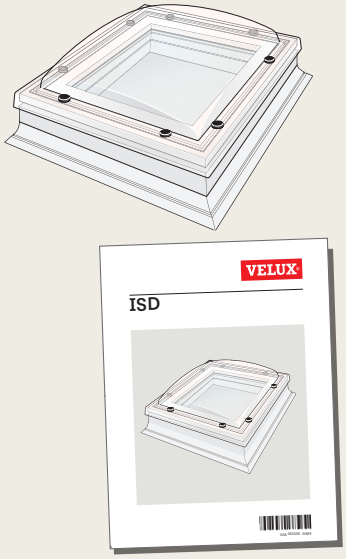

1a

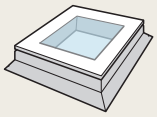

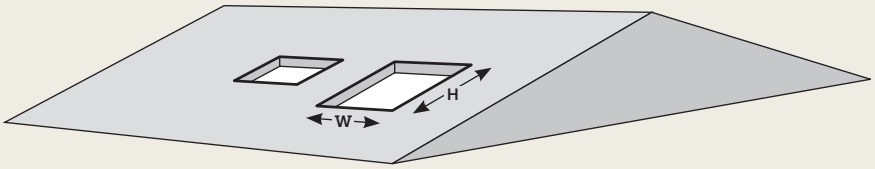


| CFP | W mm | H mm |
|---|---|---|
| 060060 | 600-610 | 600-610 |
| 080080 | 800-810 | 800-810 |
| 060090 | 600-610 | 900-910 |
| 090090 | 900-910 | 900-910 |
| 090120 | 900-910 | 1200-1210 |
| 100100 | 1000-1010 | 1000-1010 |
| 100150 | 1000-1010 | 1500-1510 |
| 120120 | 1200-1210 | 1200-1210 |
| 150150 | 1500-1510 | 1500-1510 |

BBX

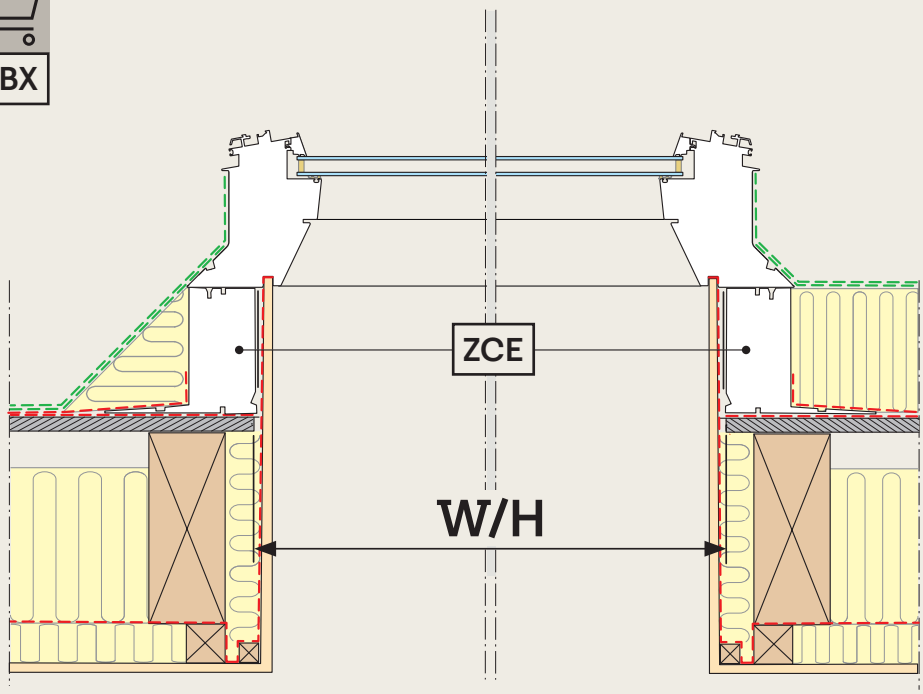


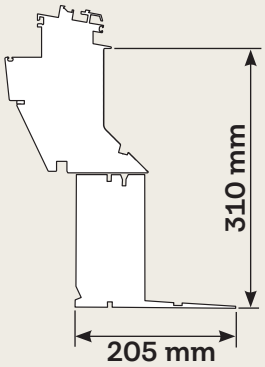


BBX

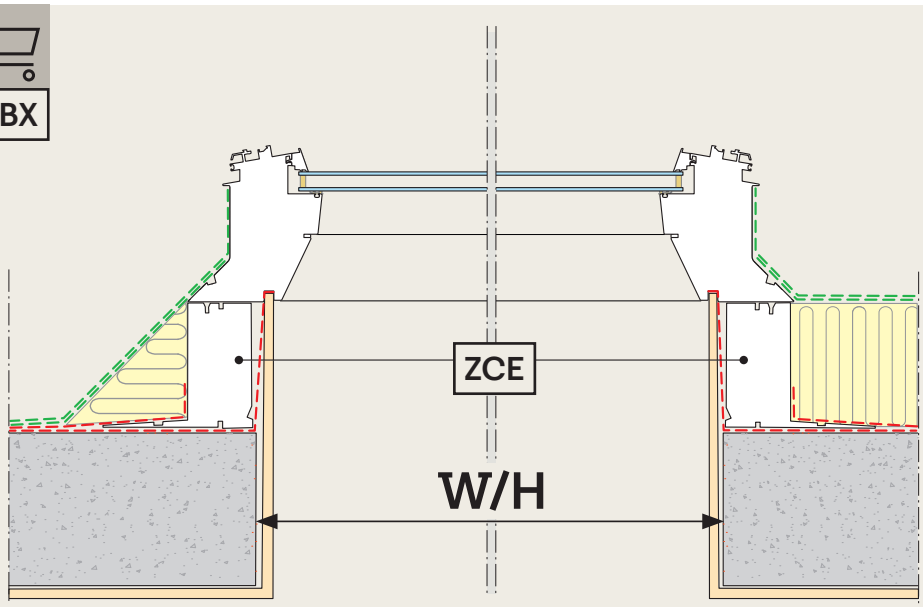


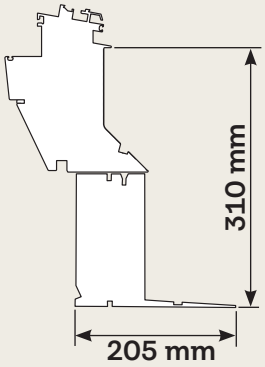

1b

ZCE

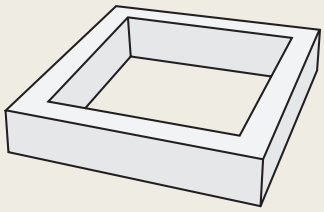

BBX

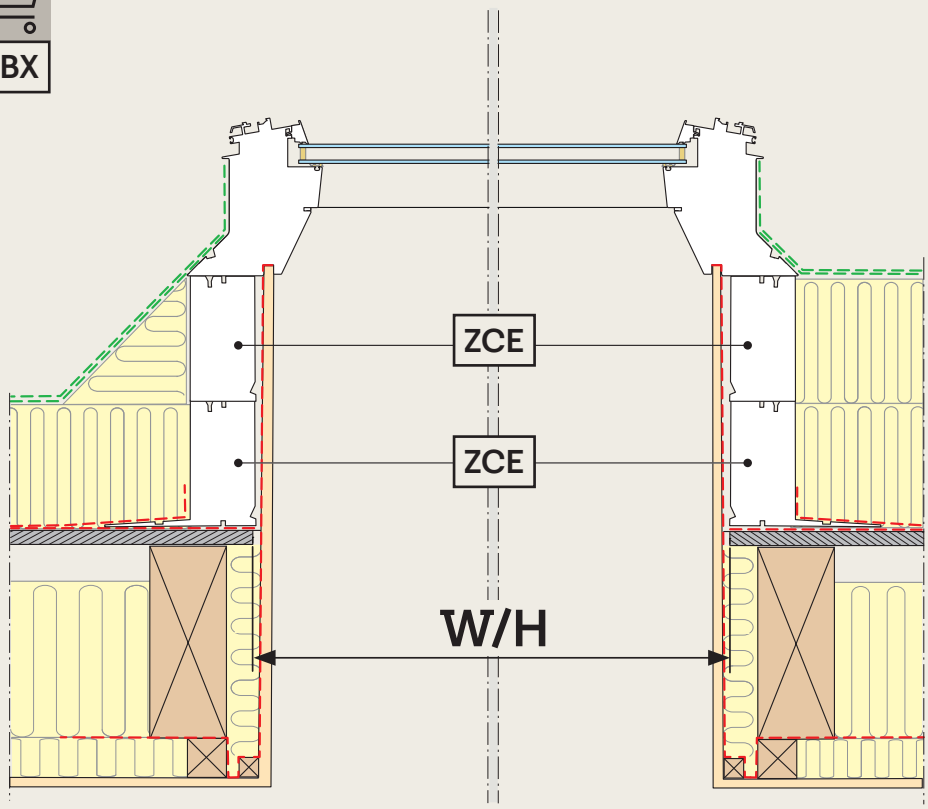


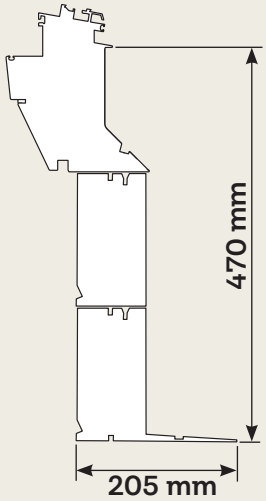


BBX

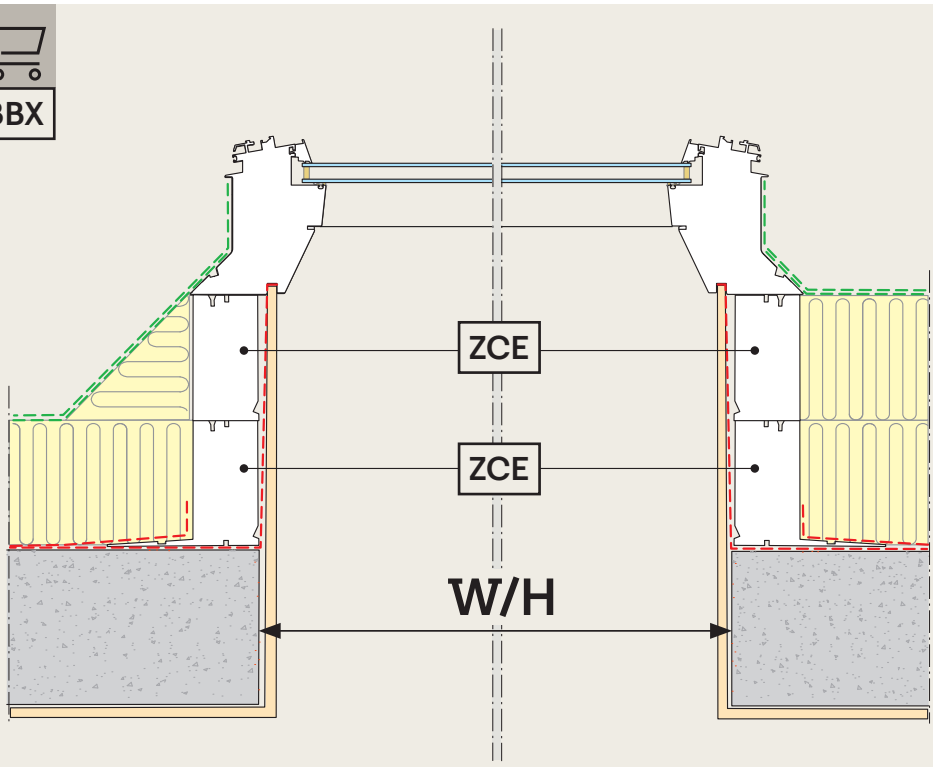


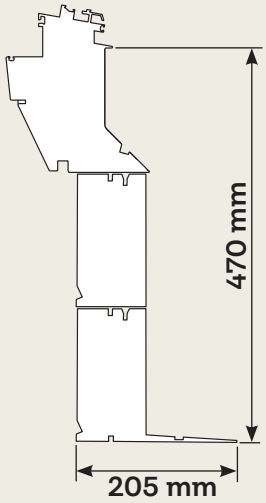

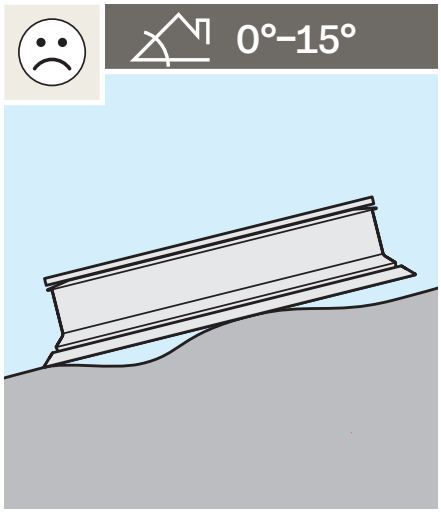
0°–15°

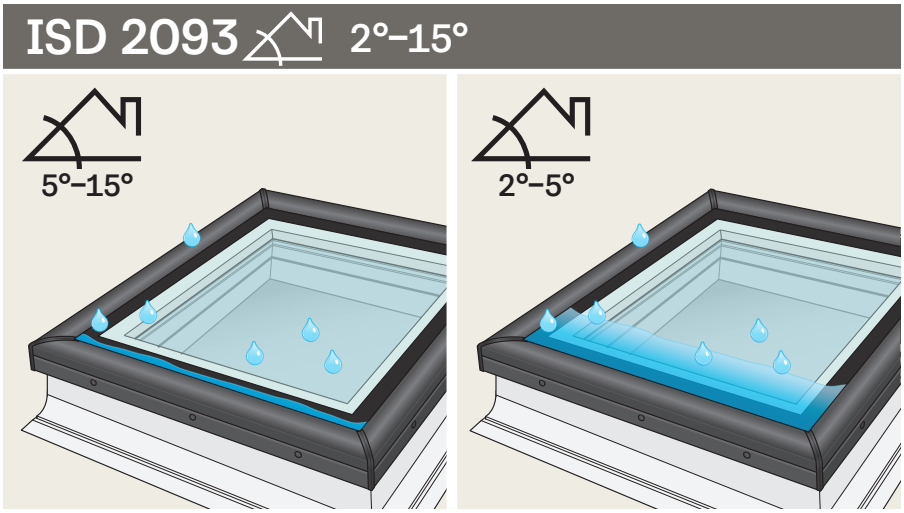
ISD 2093
2°–15°
5°–15°
2°–5°

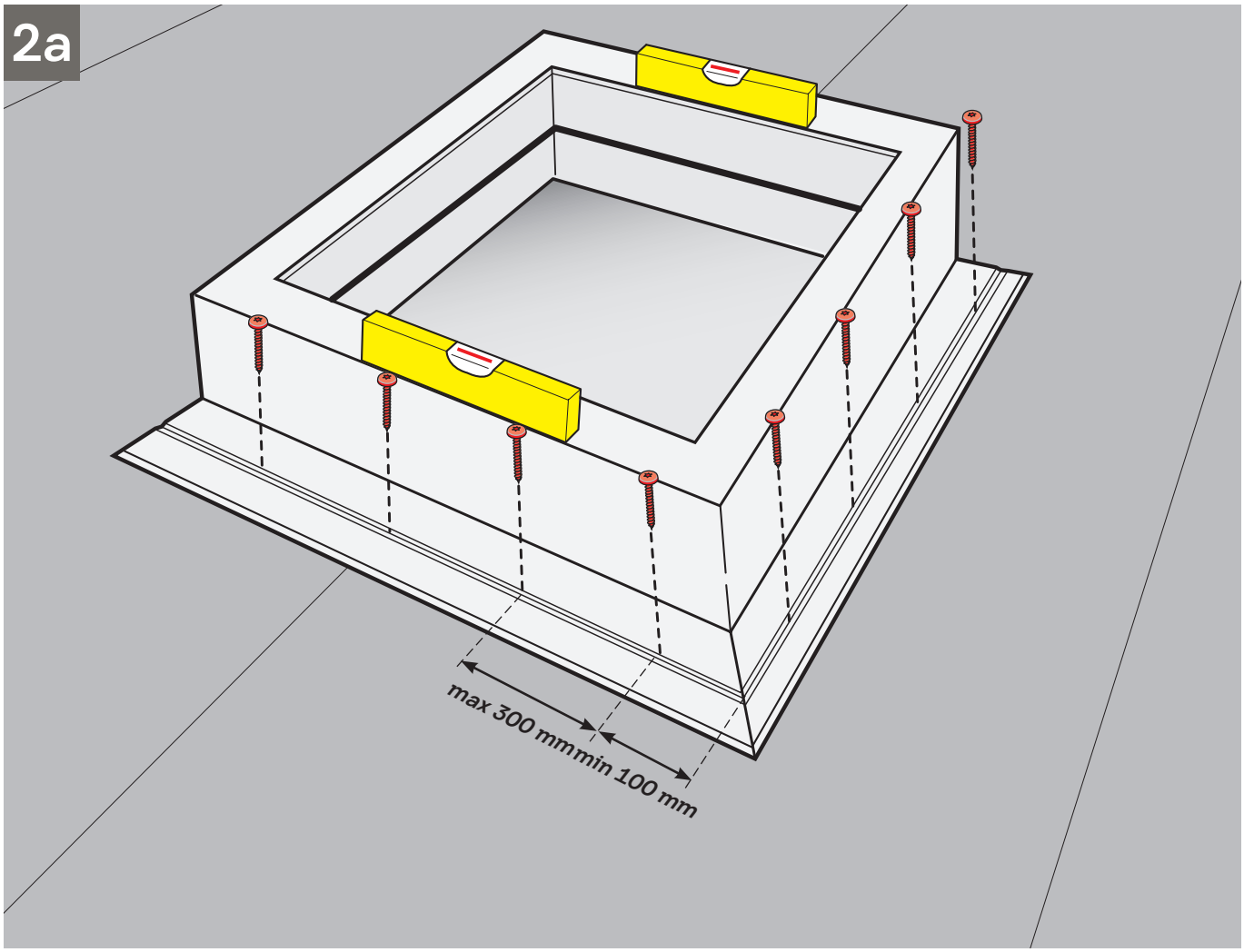
2a
max 300 mm
min 100 mm

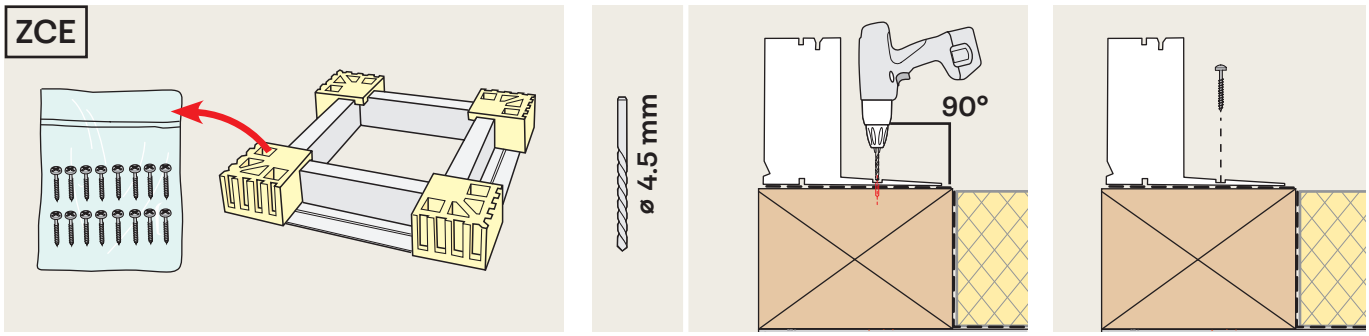
ZCE
ø 4.5 mm
90°

## 2b

ZCE

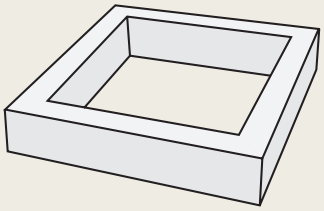

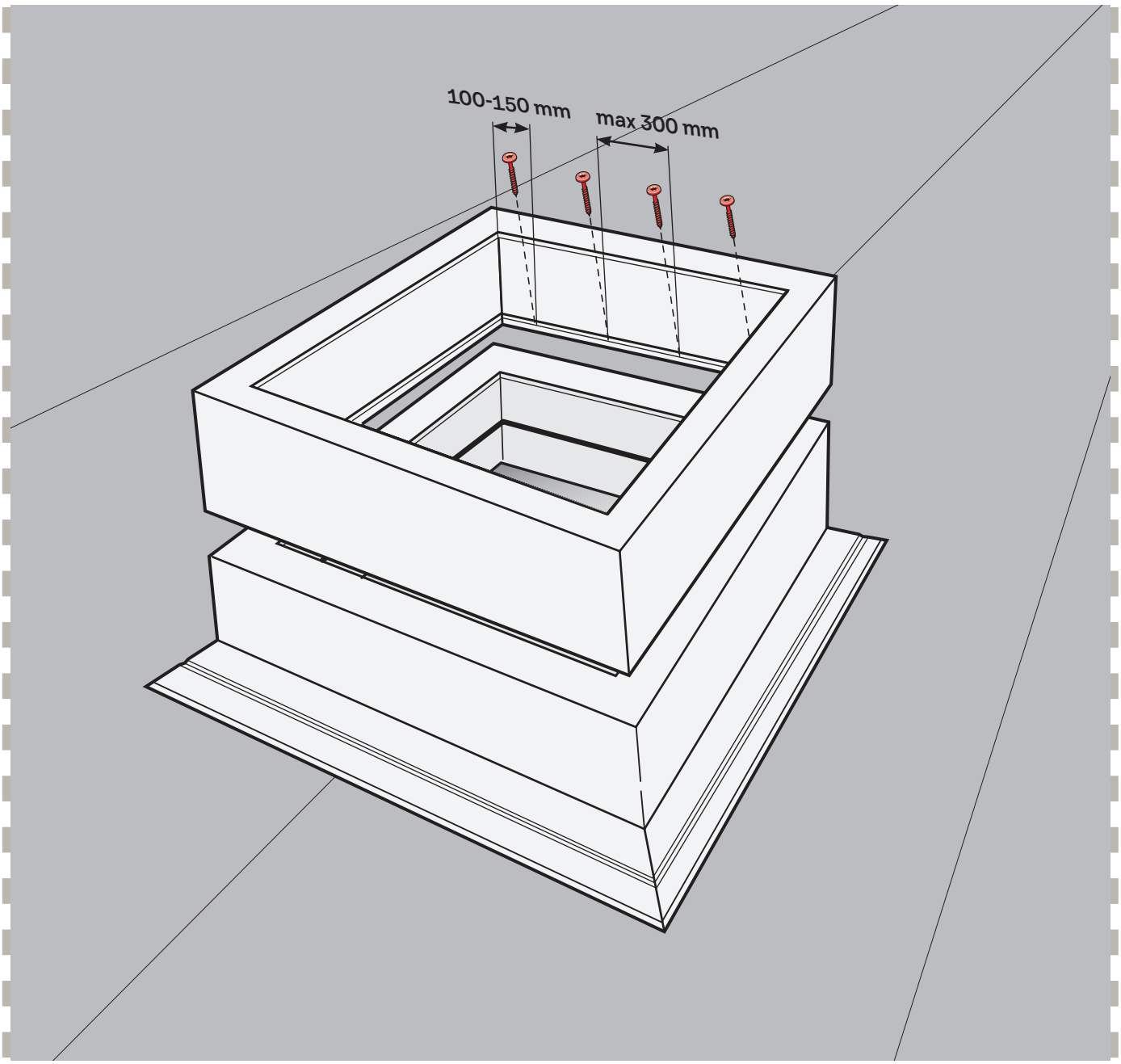


ZCE

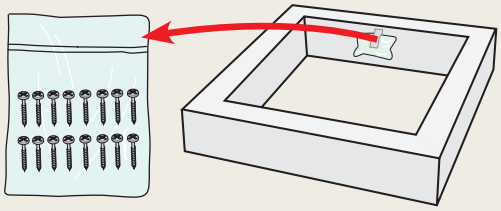

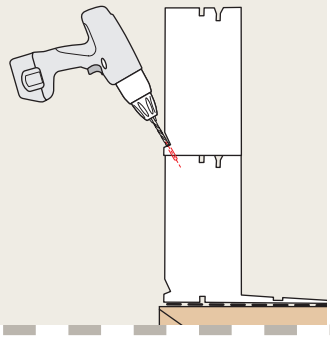

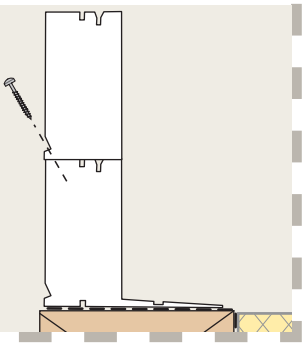

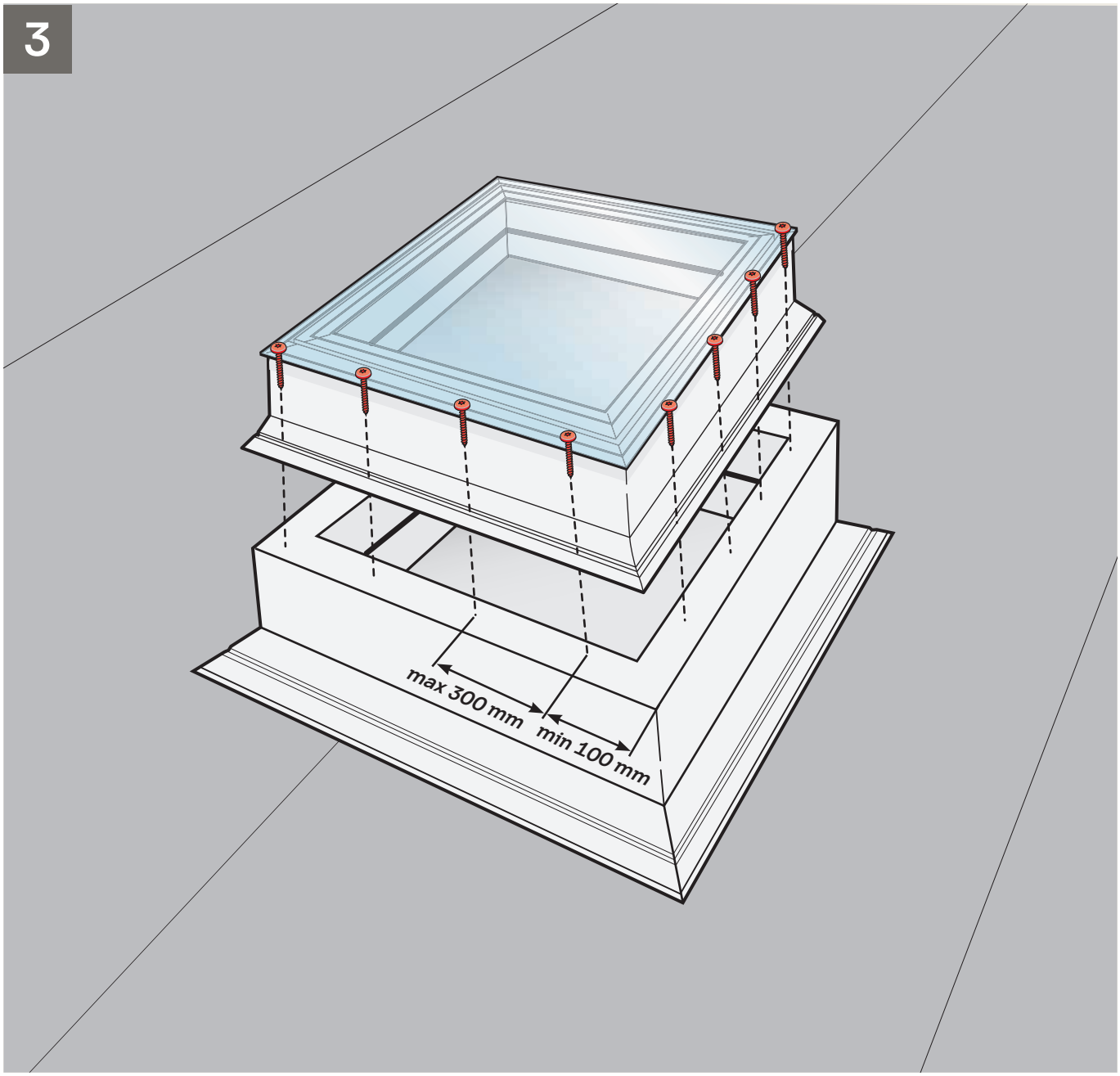
3
max 300 mm
min 100 mm

ø 4.5 mm

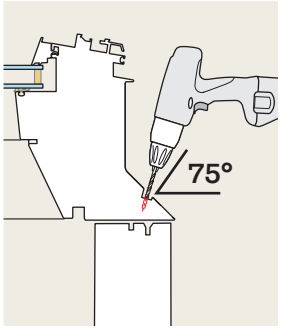
75°

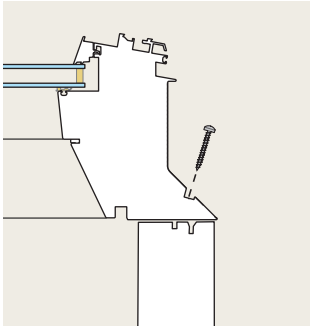

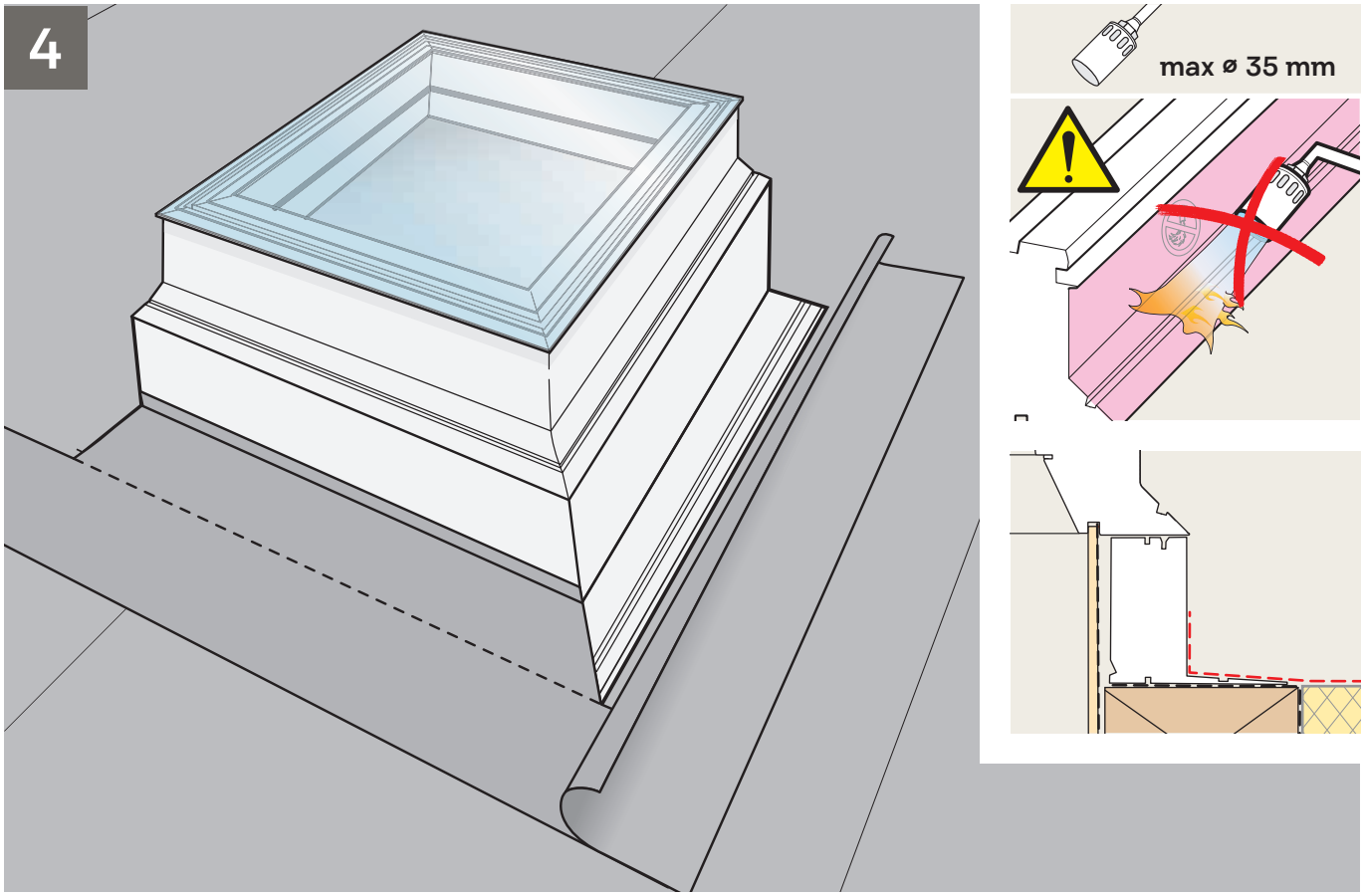
4
max ø 35 mm

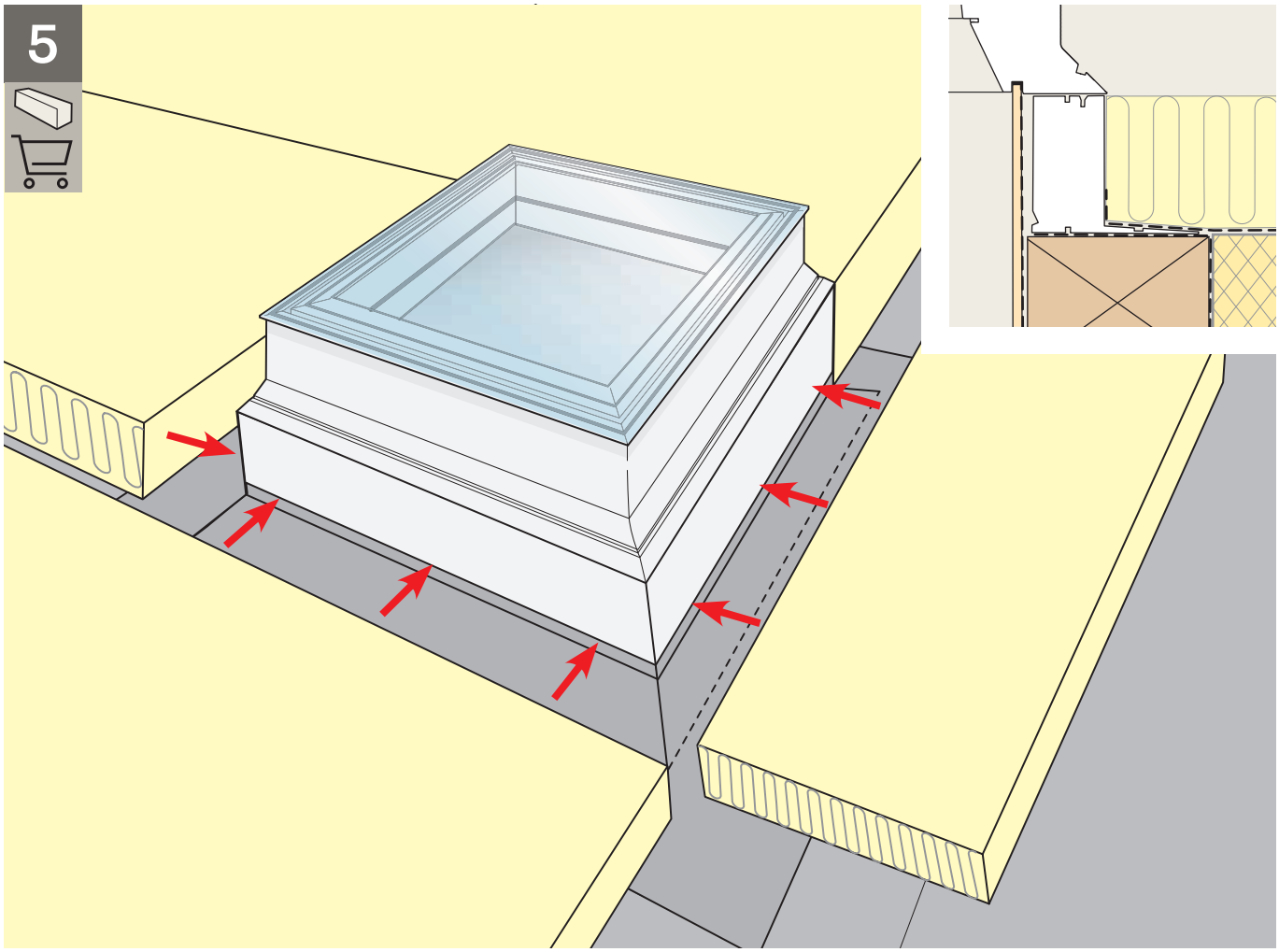
5

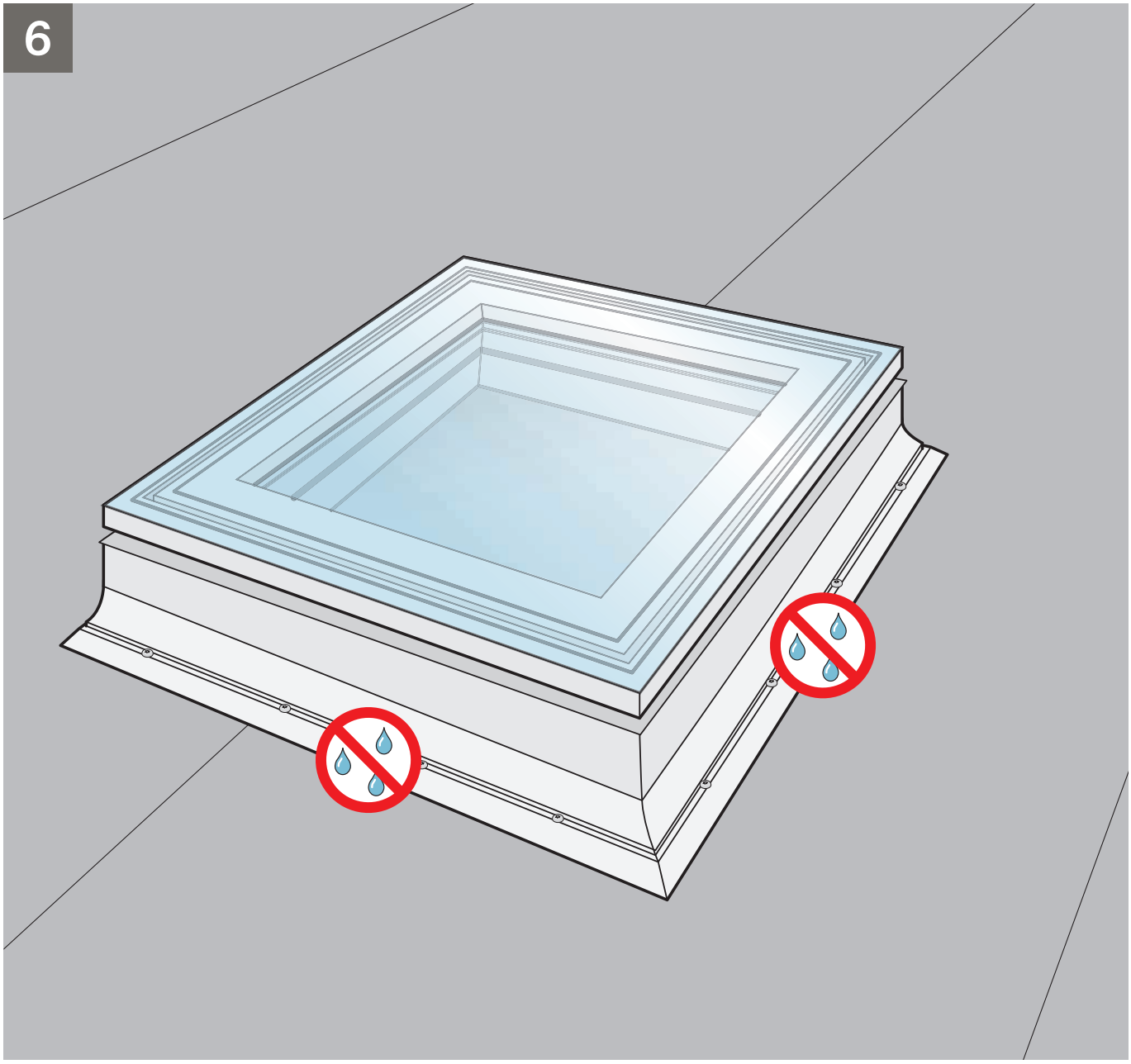
6

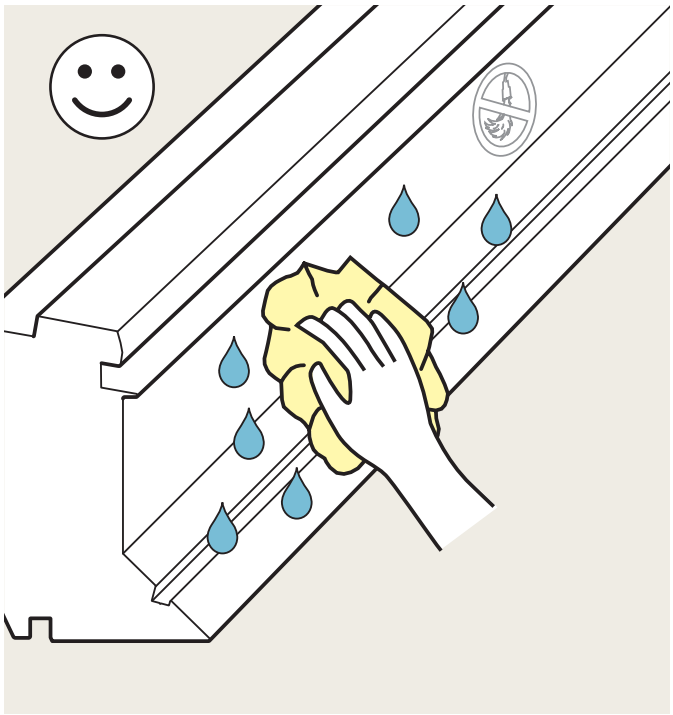

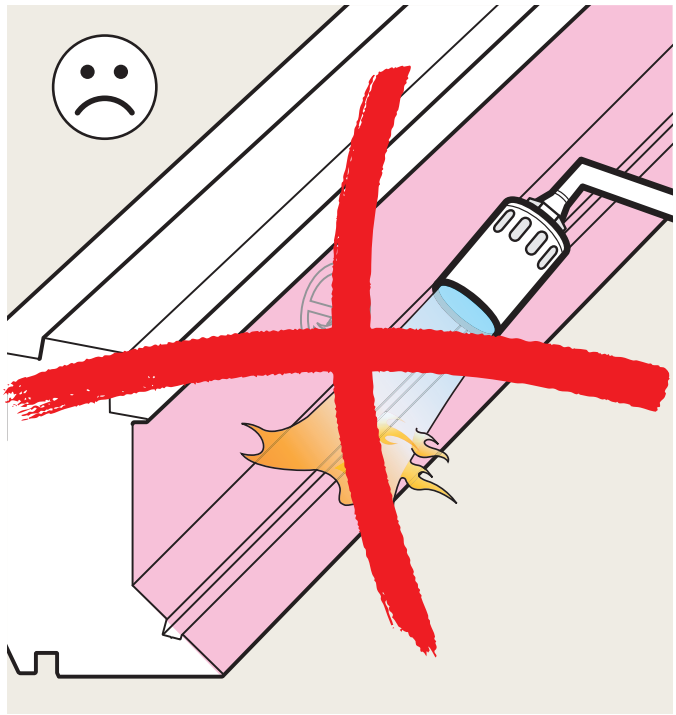

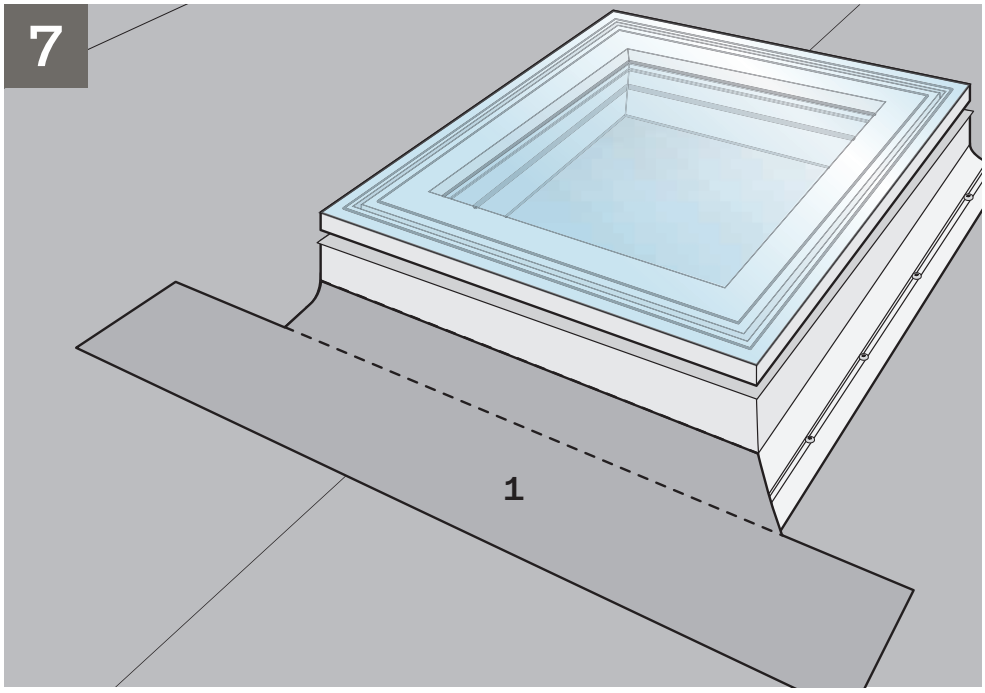
7
1

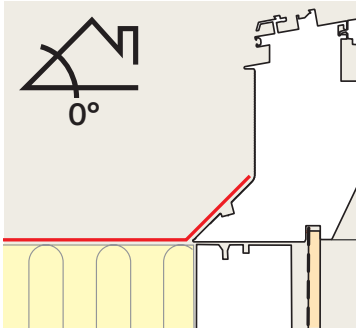
0°

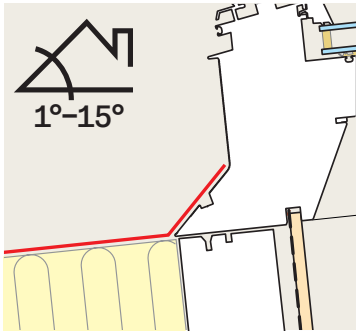
1°–15°

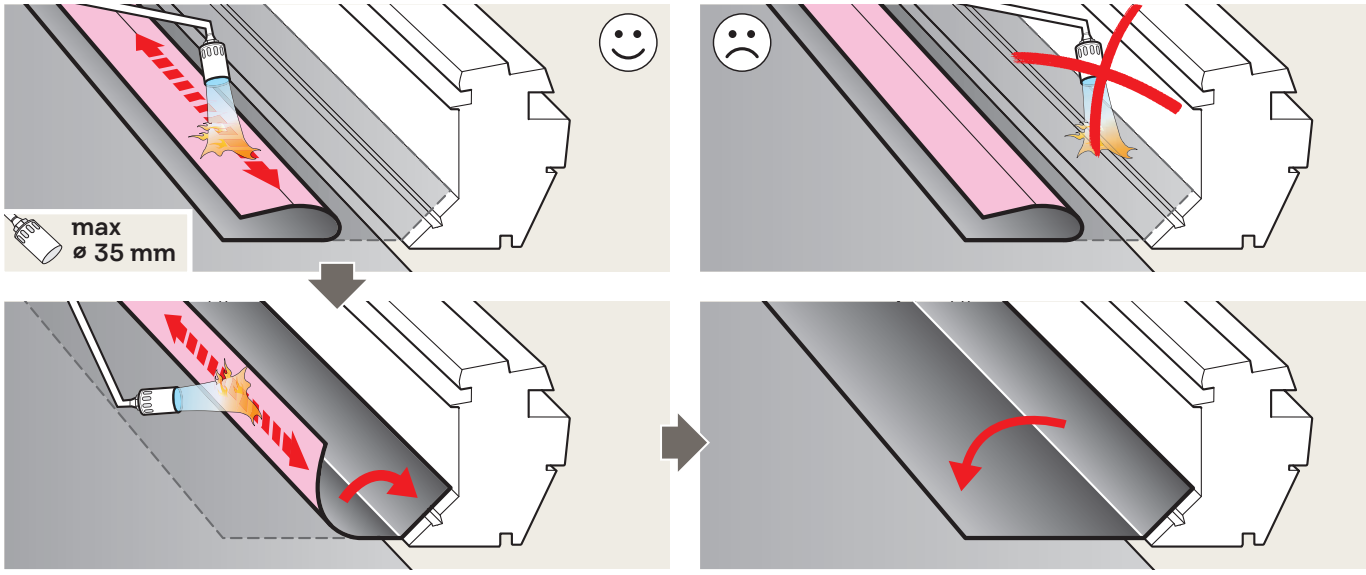
max
ø 35 mm

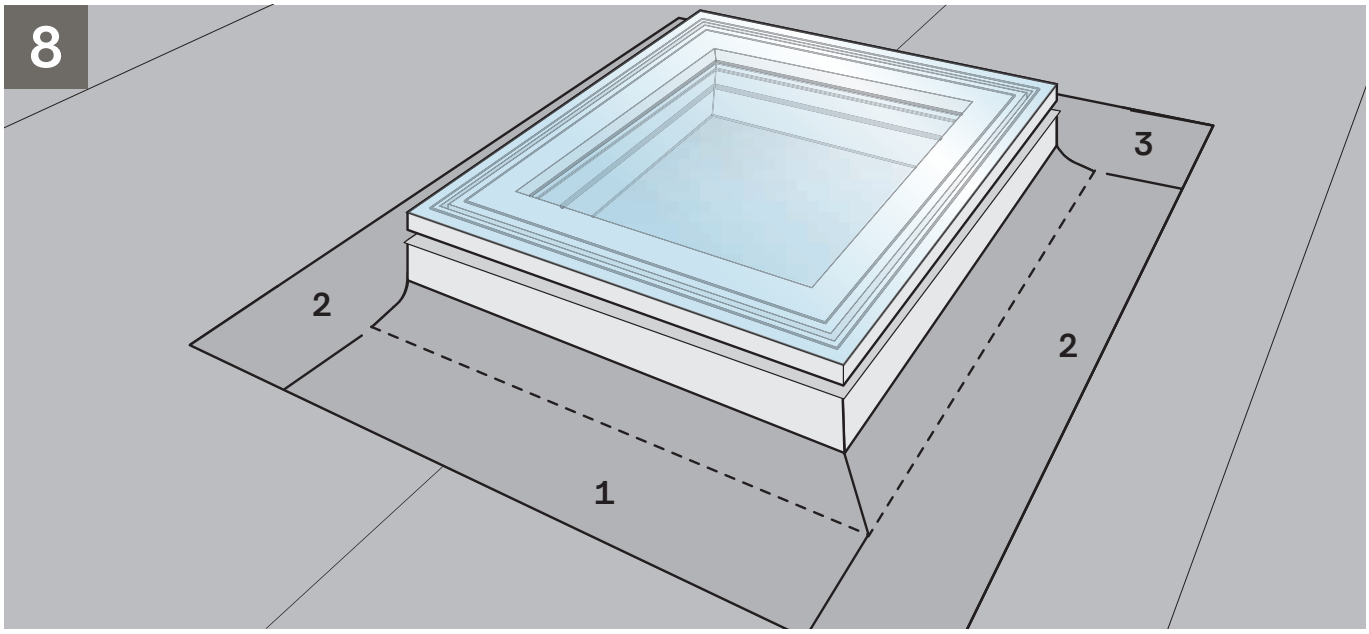
8
1
2
2
3

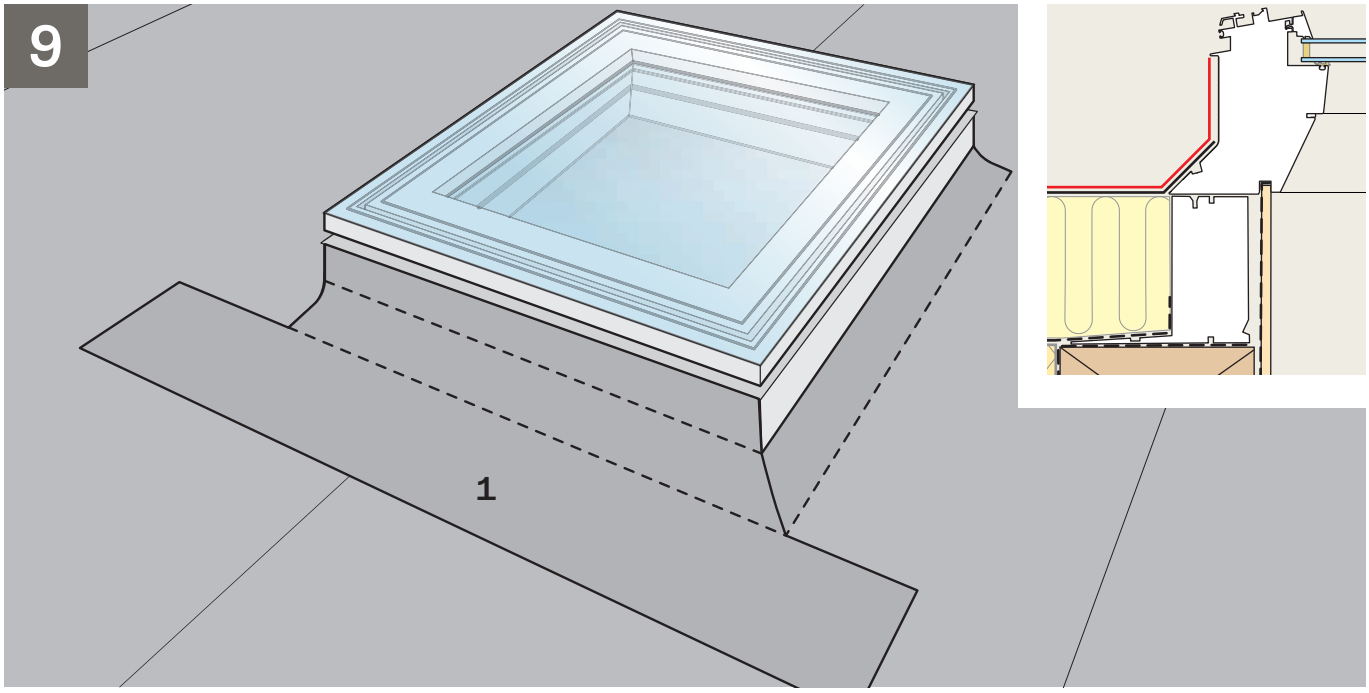
9
1

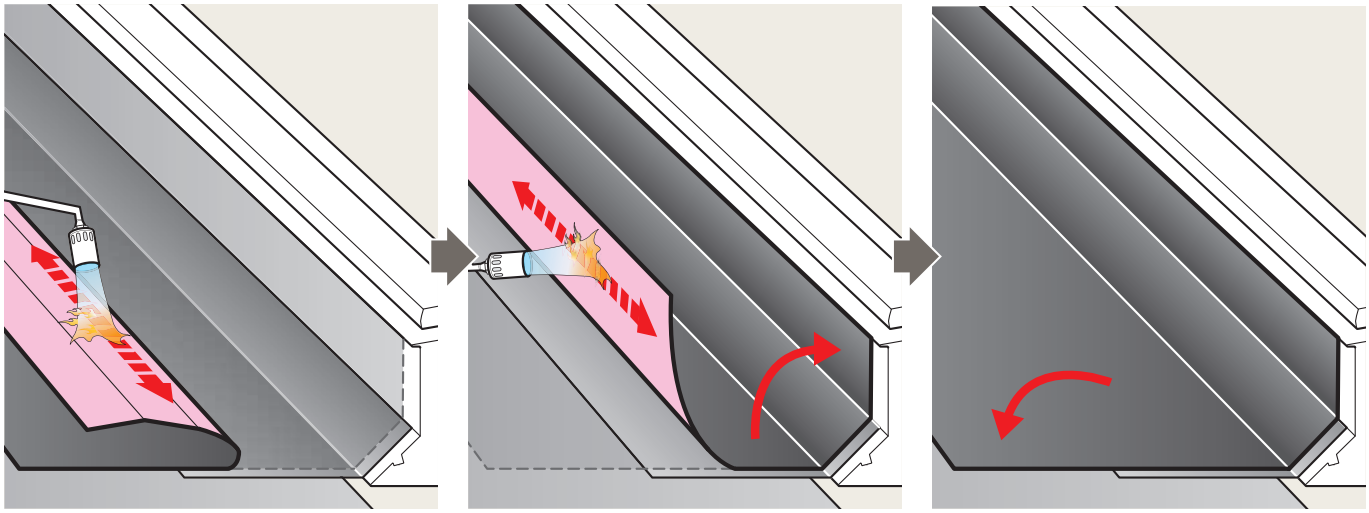

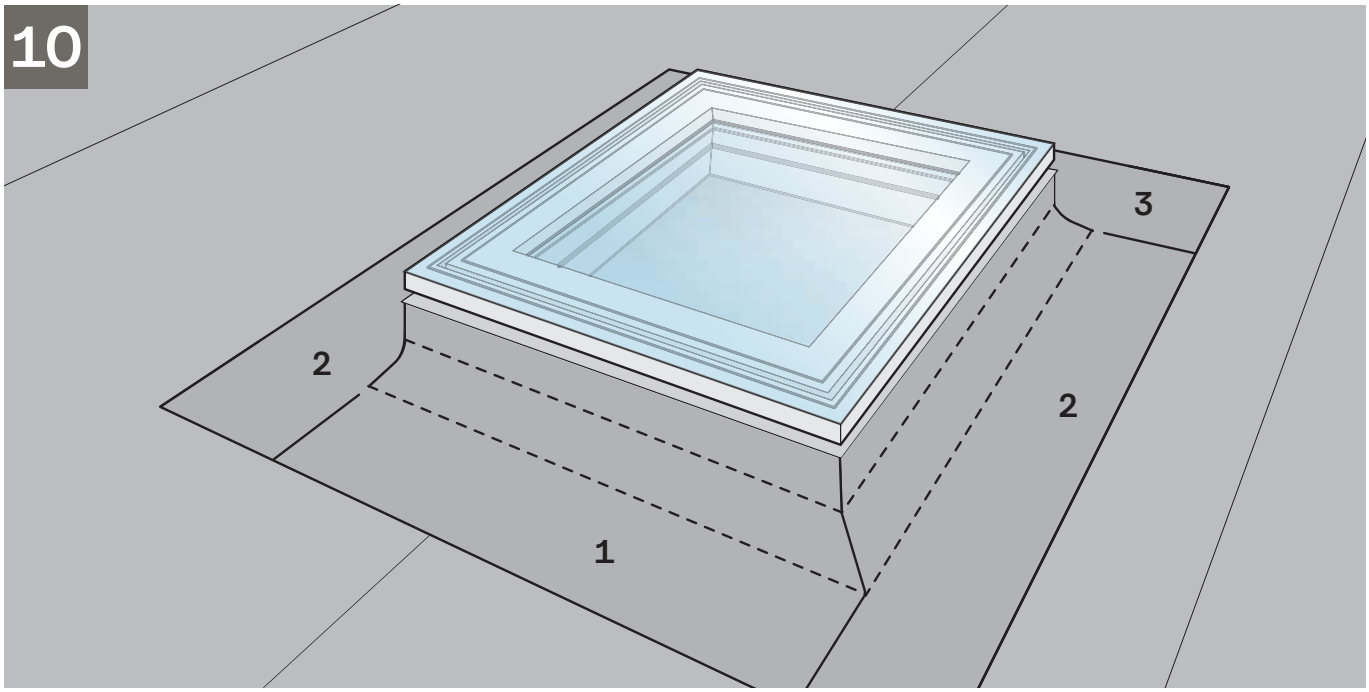
10
1
2
2
3

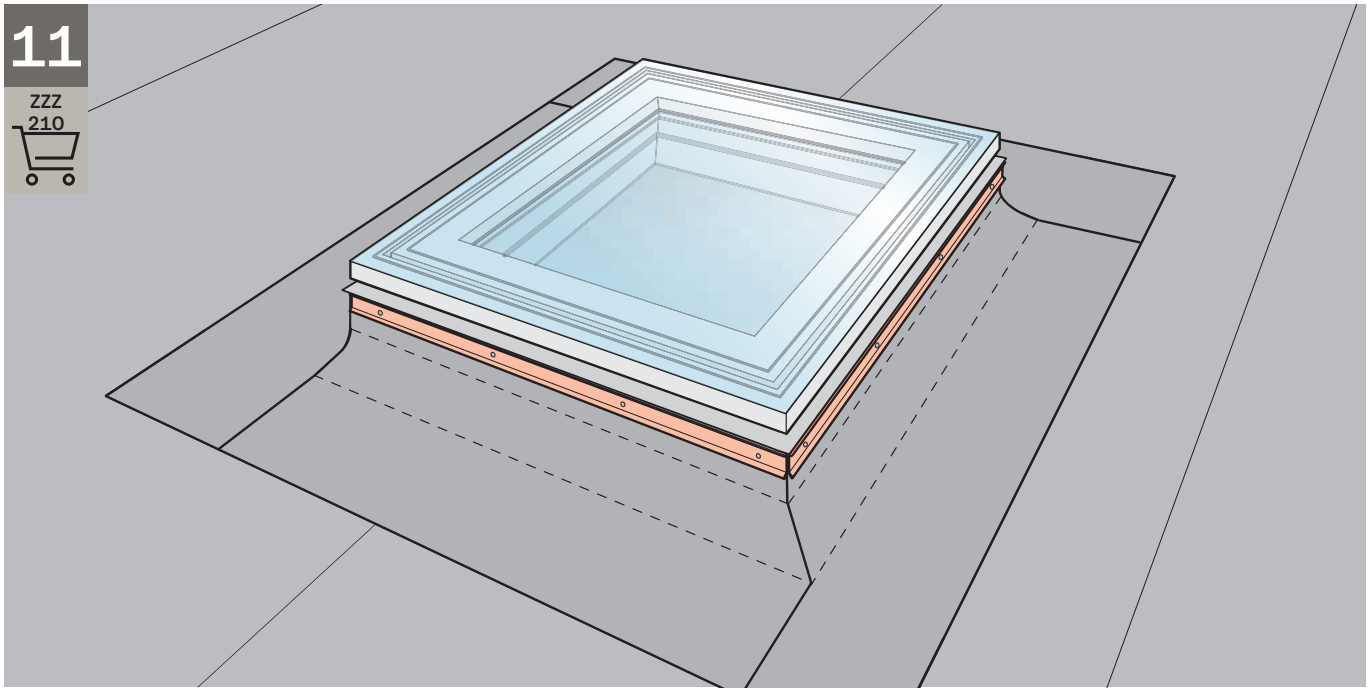


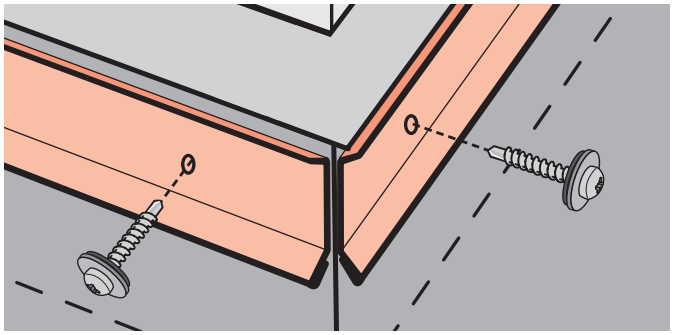

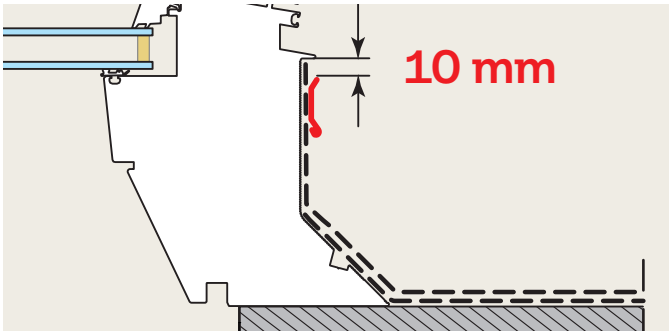


## ISD 1093

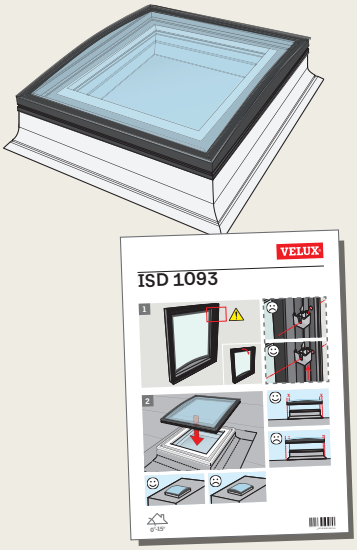


## ISD 2093

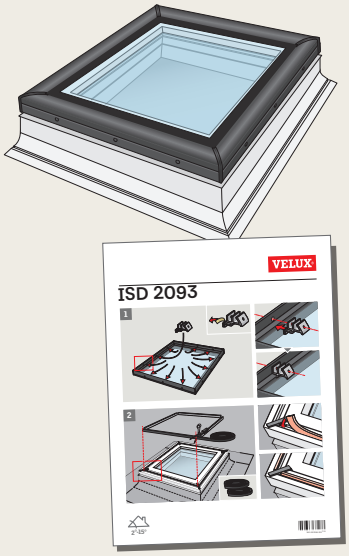


## ISD

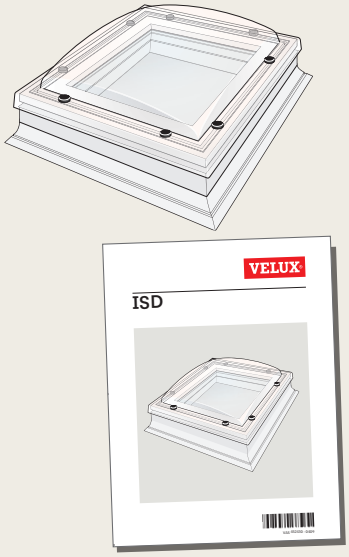

VELUX®

www.velux.com

velux.com/contact

INSTALLATION INSTRUCTIONS FOR CFP + ISD 1093 / ISD 2093 / ISD, CFP + ZCE + ISD 1093 / ISD 2093 / ISD. ©2007, 2025 VELUX GROUP ®VELUX AND THE VELUX LOGO ARE REGISTERED TRADEMARKS USED UNDER LICENCE BY THE VELUX GROUP