GVO

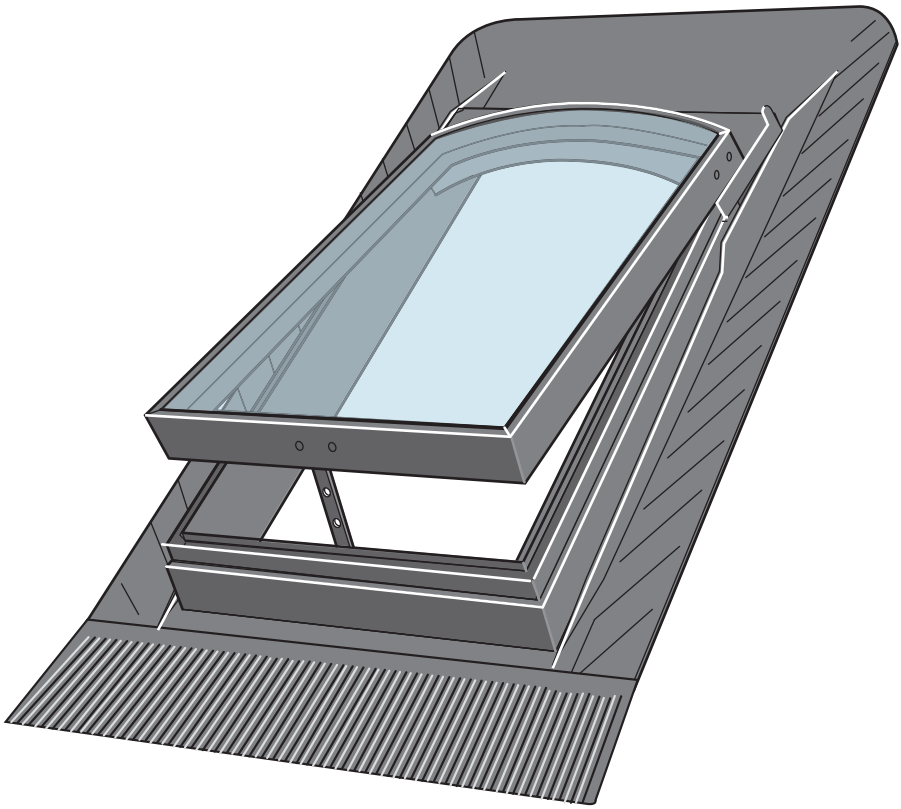

VELUX®

15°–60°

VAS 451705-2025-09

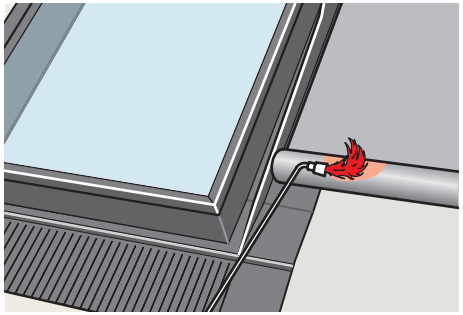

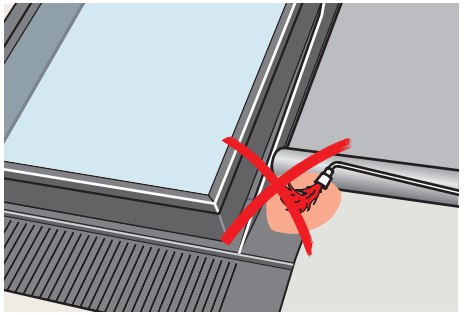

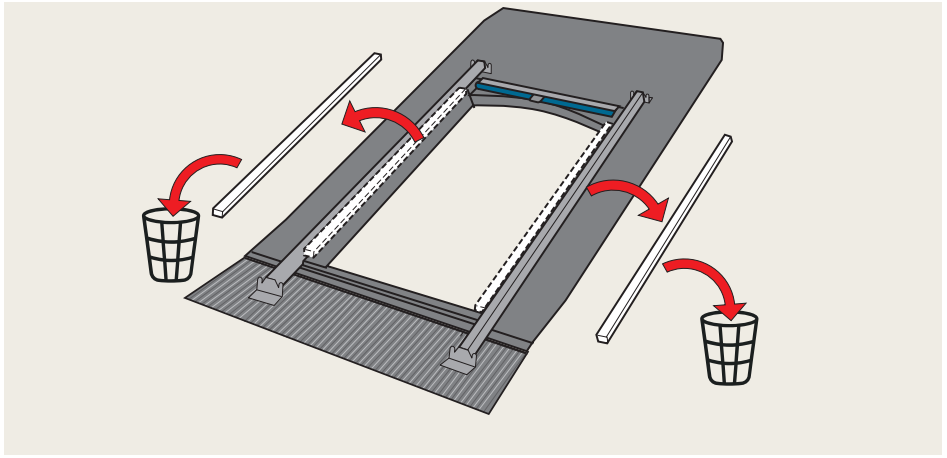

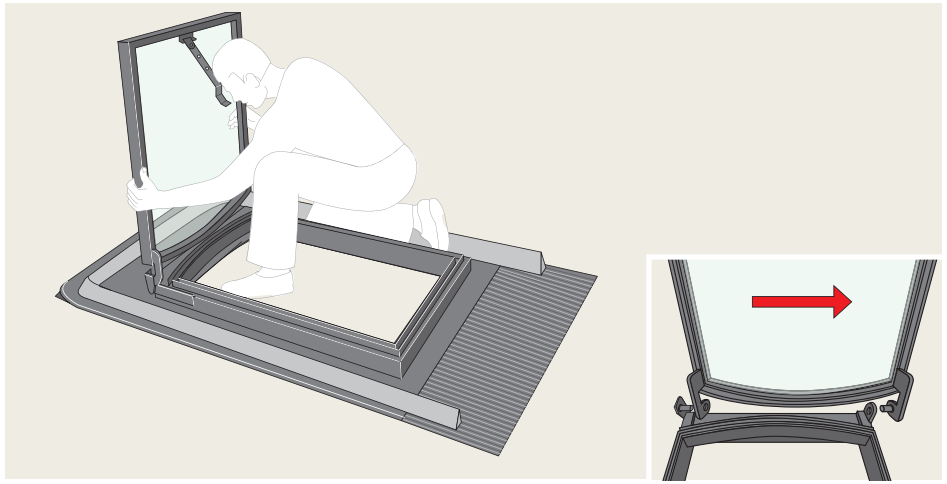

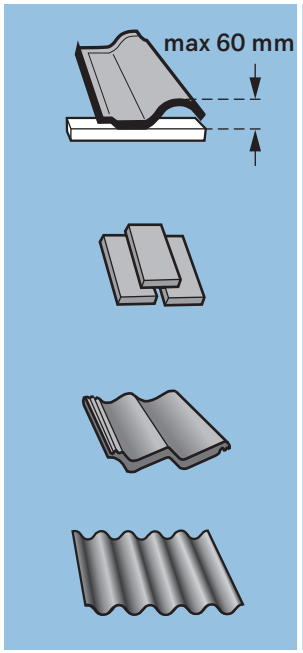

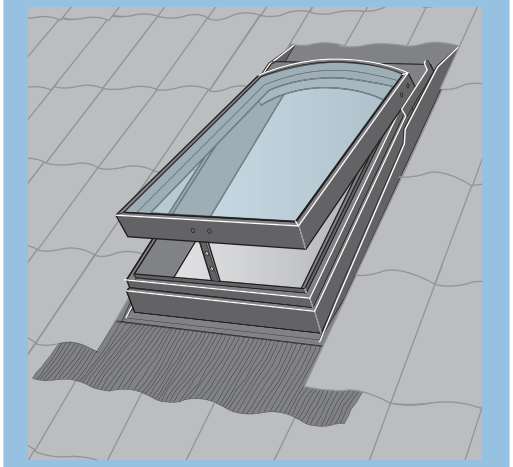

Page 4-7

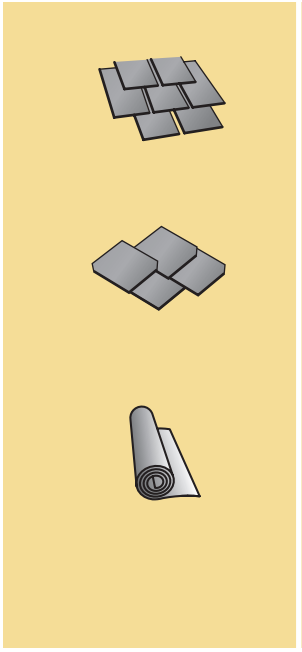

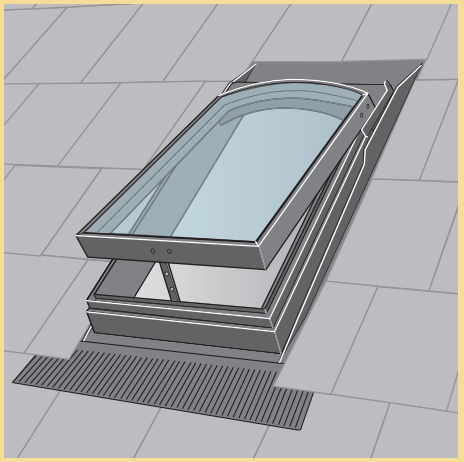

Page 8-12


max 60 mm

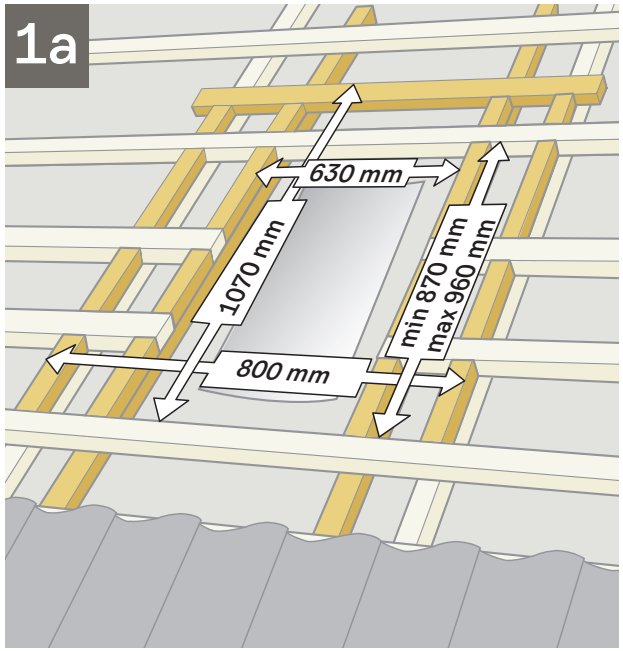
1a
630 mm
1070 mm
800 mm
min 870 mm
max 960 mm

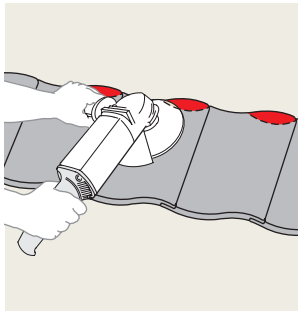

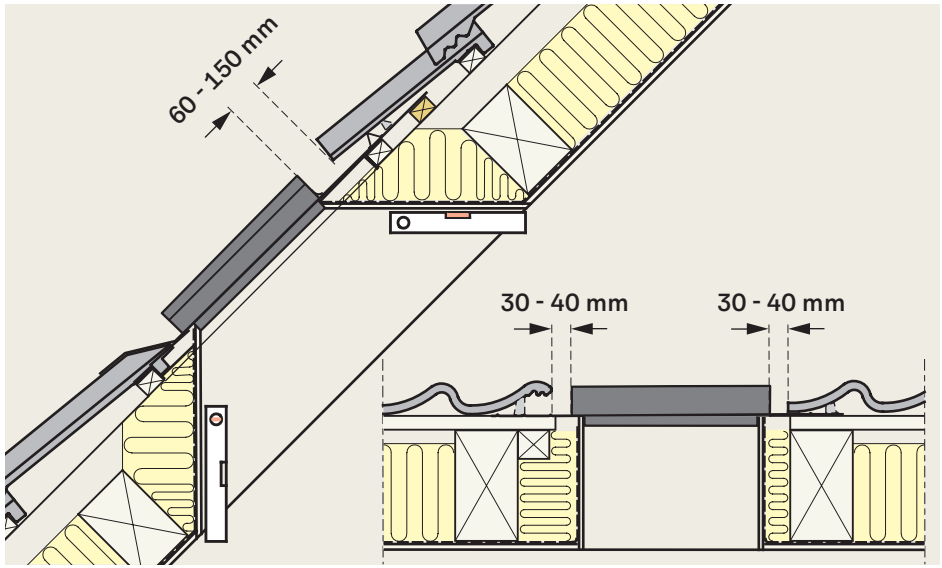
60 - 150 mm
30 - 40 mm
30 - 40 mm


max 60 mm

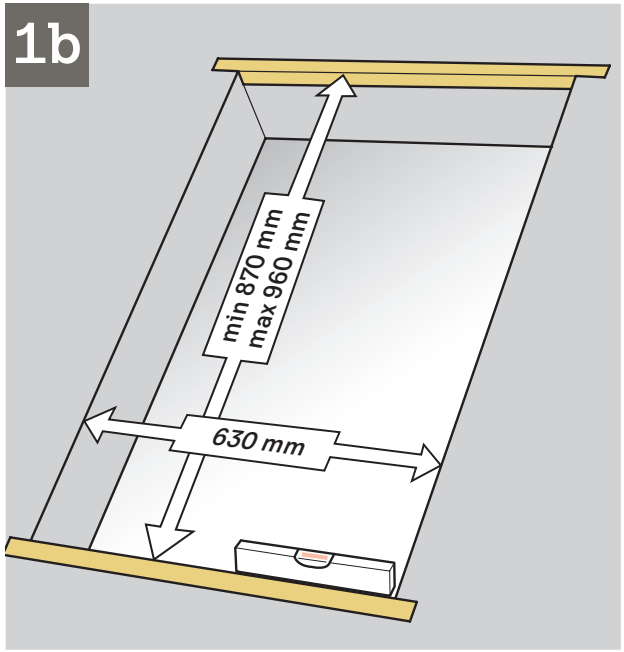
1b
min 870 mm
max 960 mm
630 mm

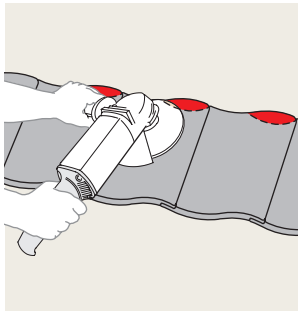

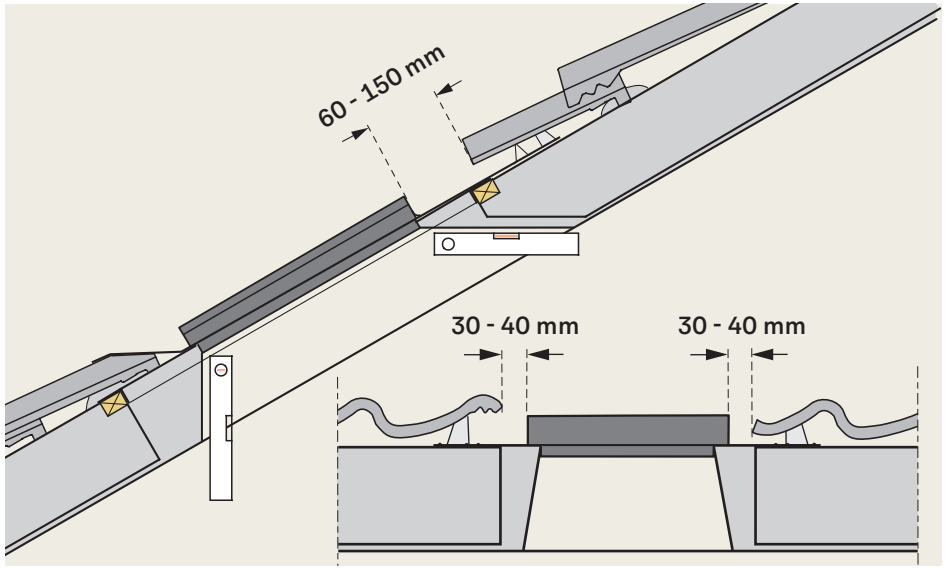
60 - 150 mm
30 - 40 mm
30 - 40 mm

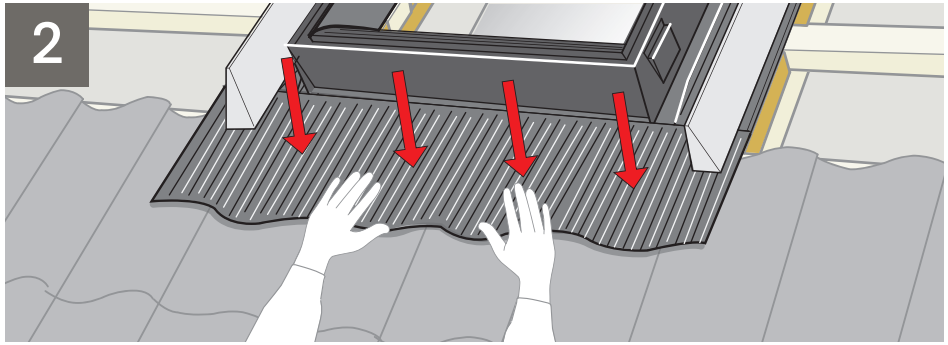
2

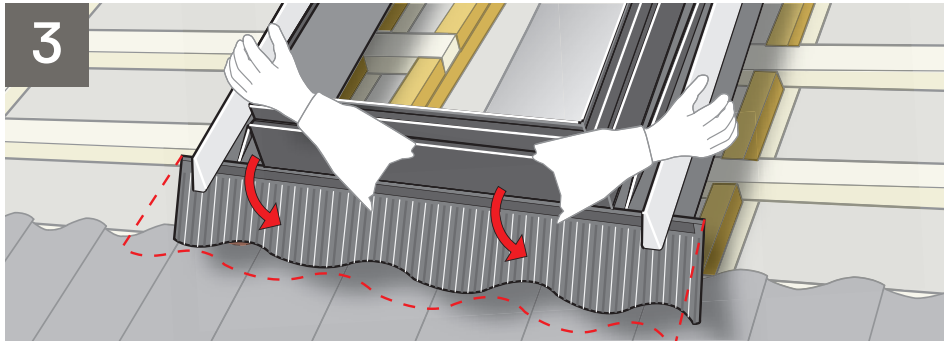
3

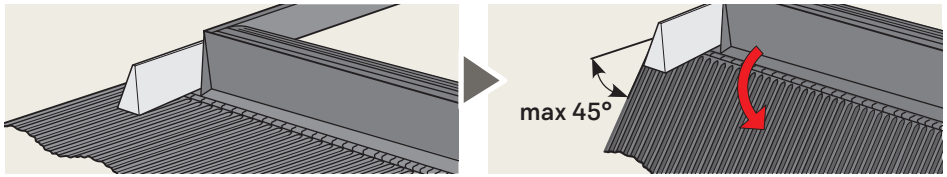
max 45°

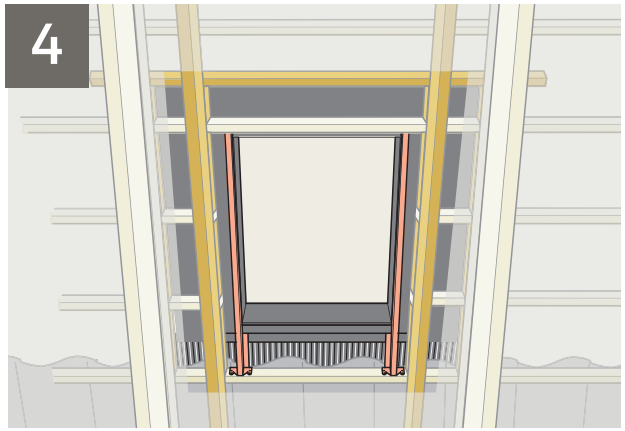
4

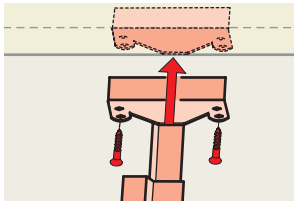

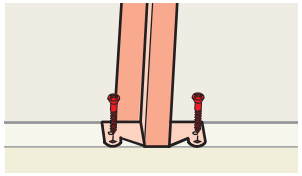

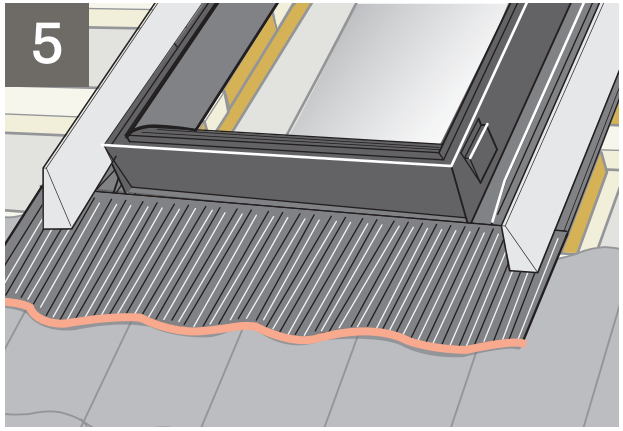
5

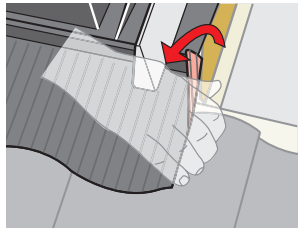

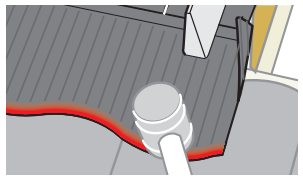

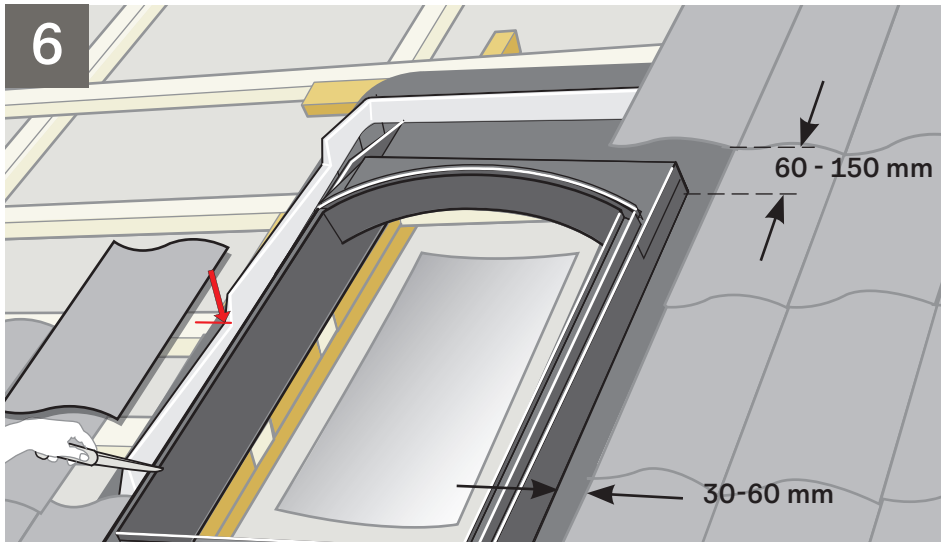
6
60 - 150 mm
30-60 mm

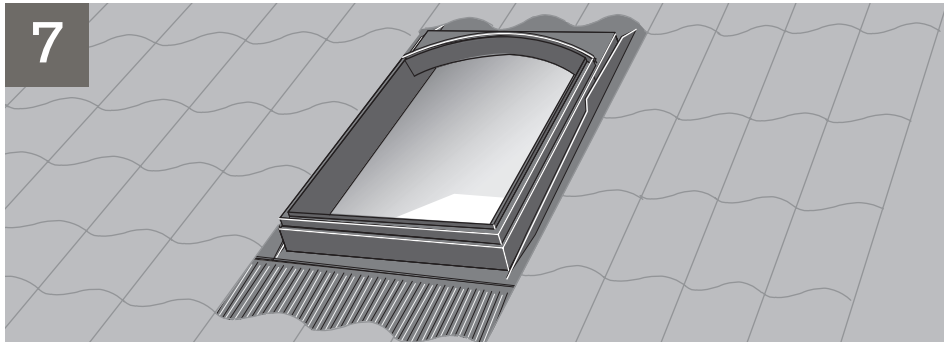
7

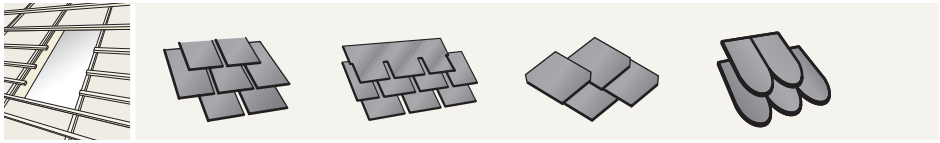

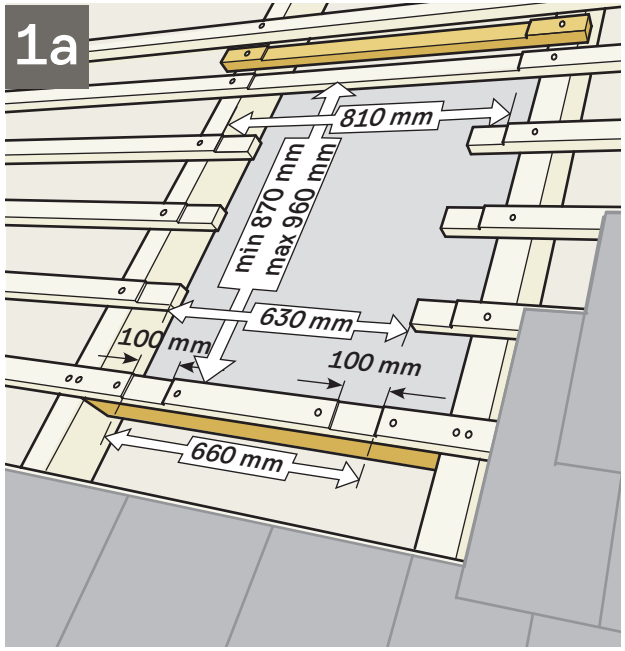
1a
810 mm
min 870 mm
max 960 mm
630 mm
100 mm
100 mm
660 mm

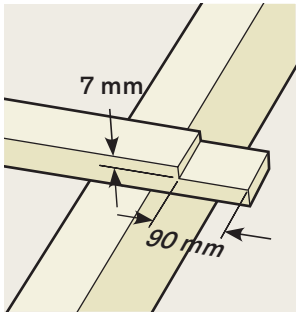
7 mm
90 mm

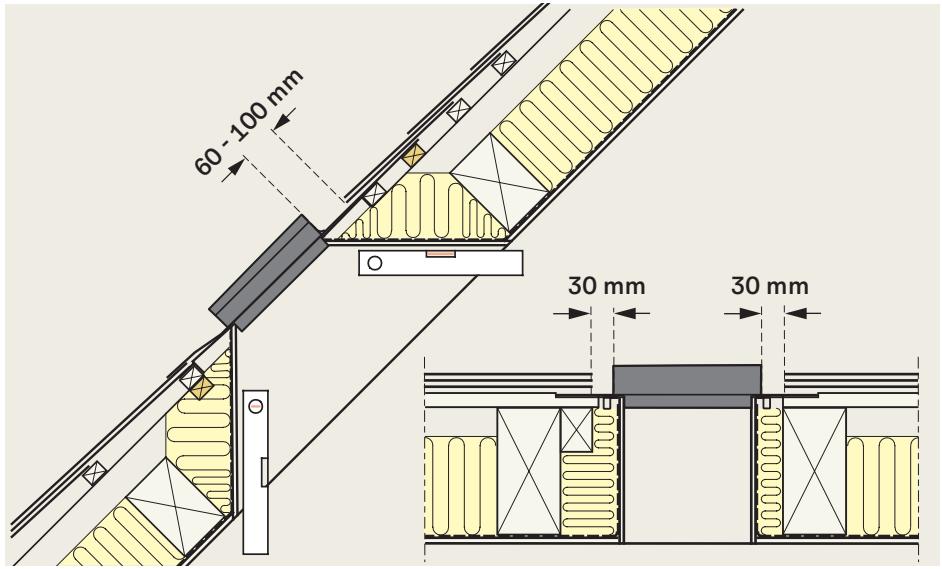
60 - 100 mm
30 mm
30 mm

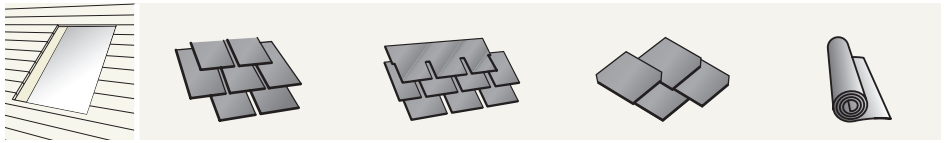

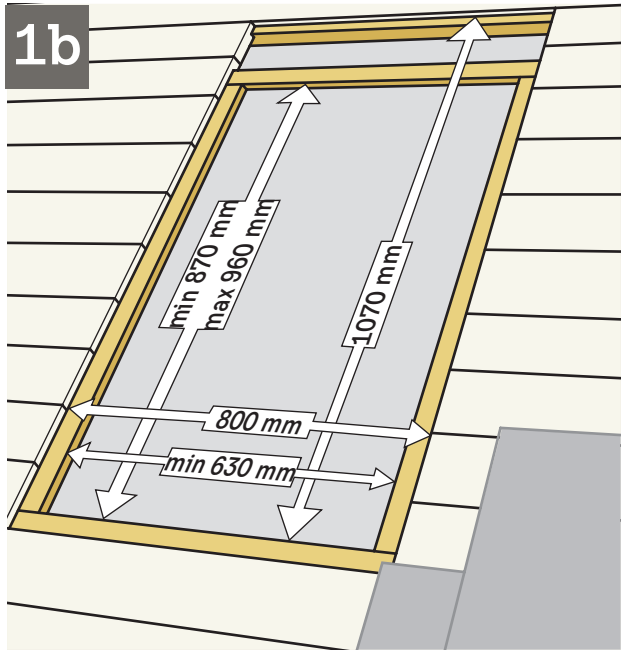
1b
min 870 mm
max 960 mm
1070 mm
800 mm
min 630 mm

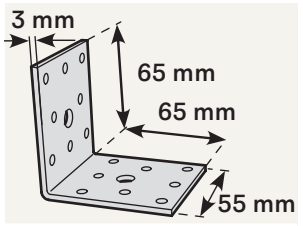
3 mm
65 mm
65 mm
55 mm

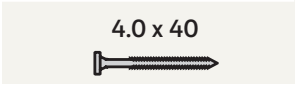
4.0 x 40

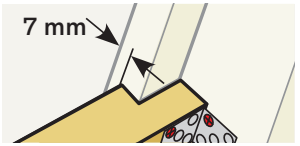
7 mm

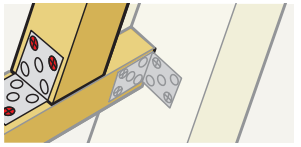

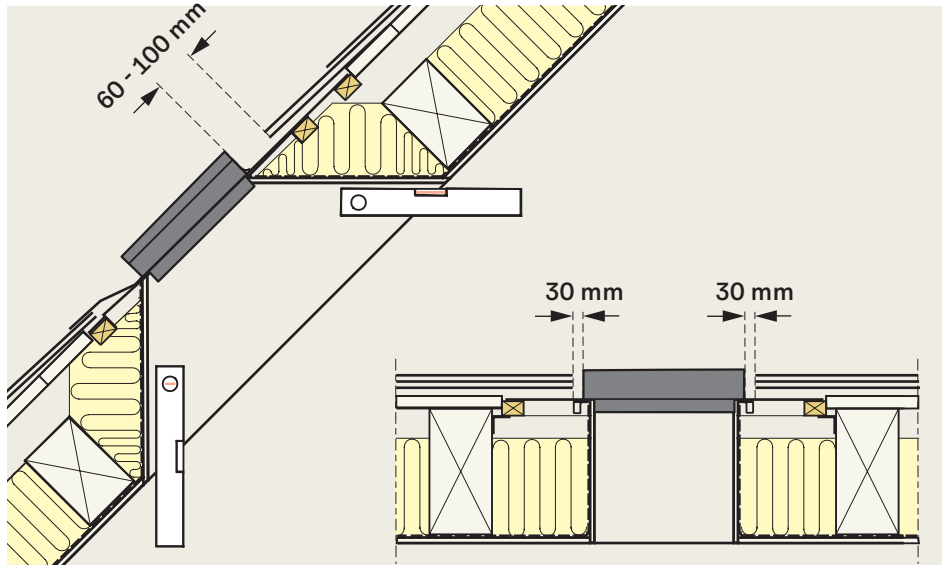
60 - 100 mm
30 mm
30 mm

2

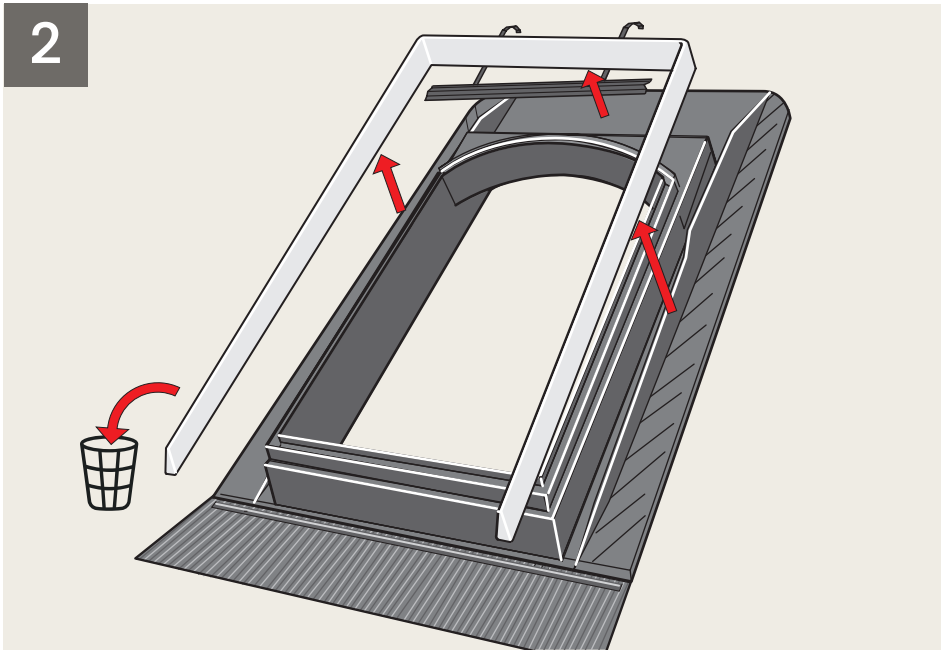

4

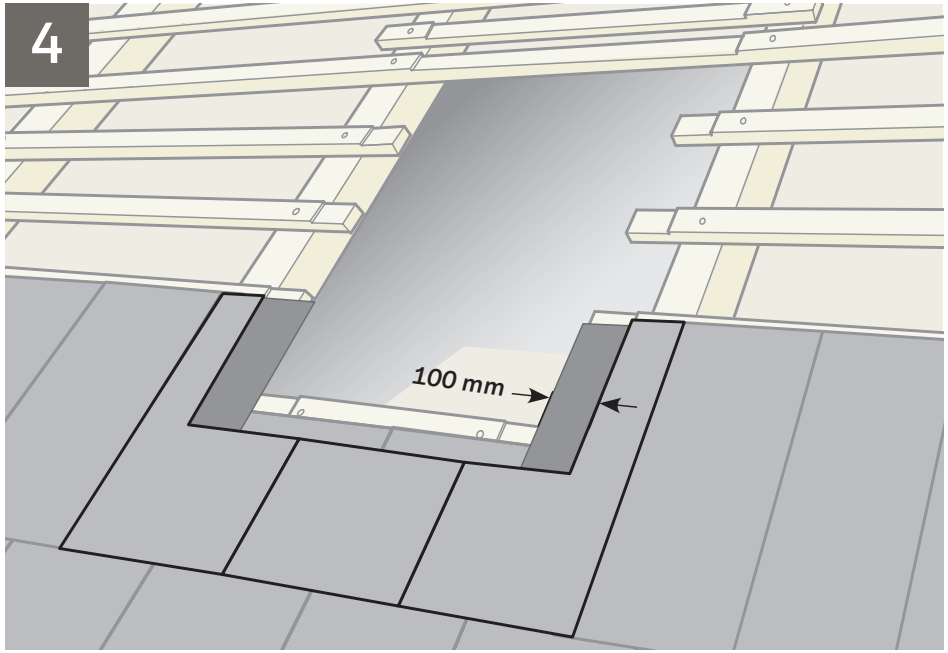
100 mm

3

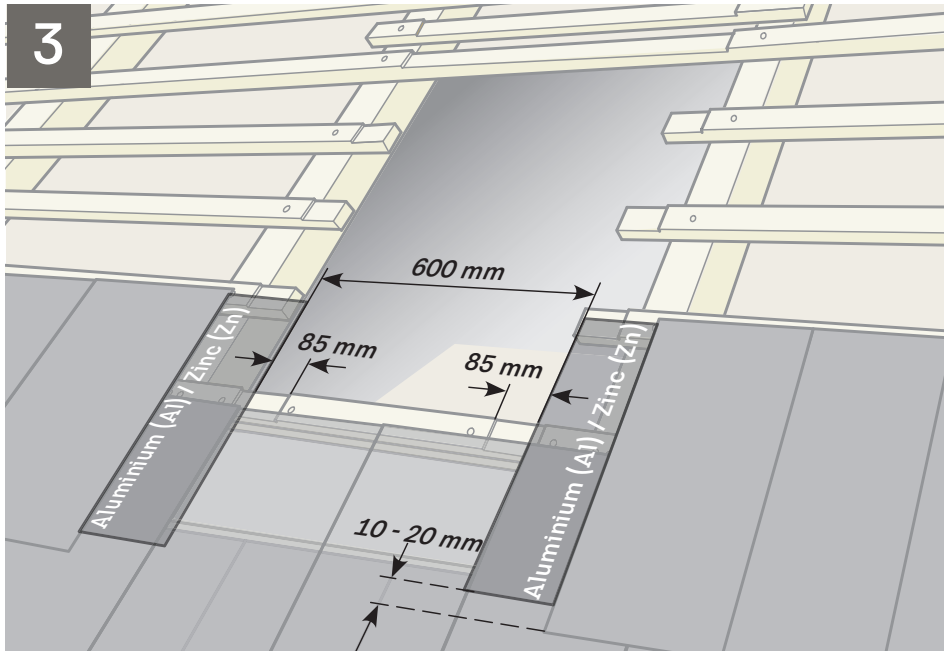
600 mm
85 mm
85 mm
Aluminium (Al) / Zinc (Zn)
Aluminium (Al) / Zinc (Zn)
10 - 20 mm

5

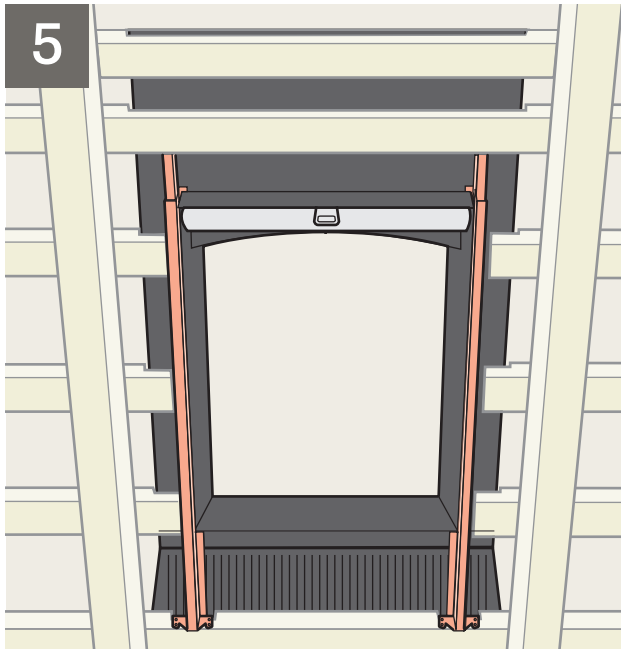

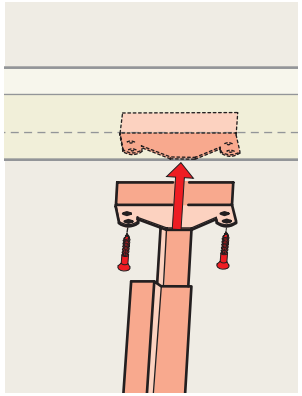

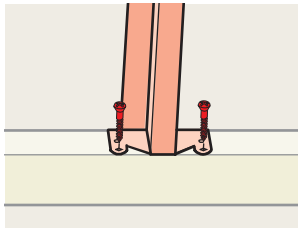

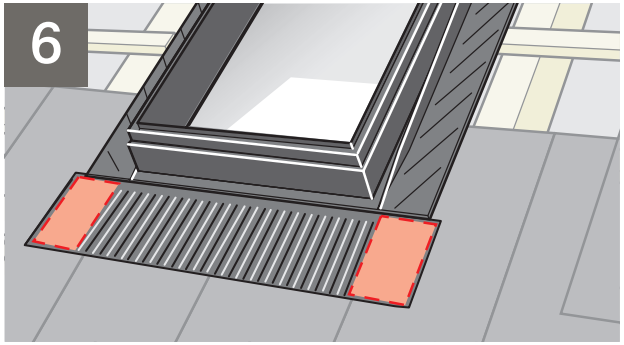

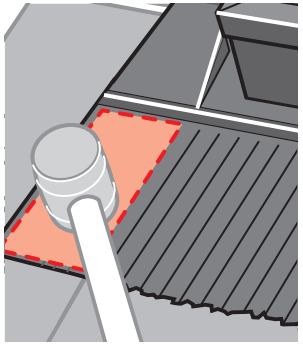

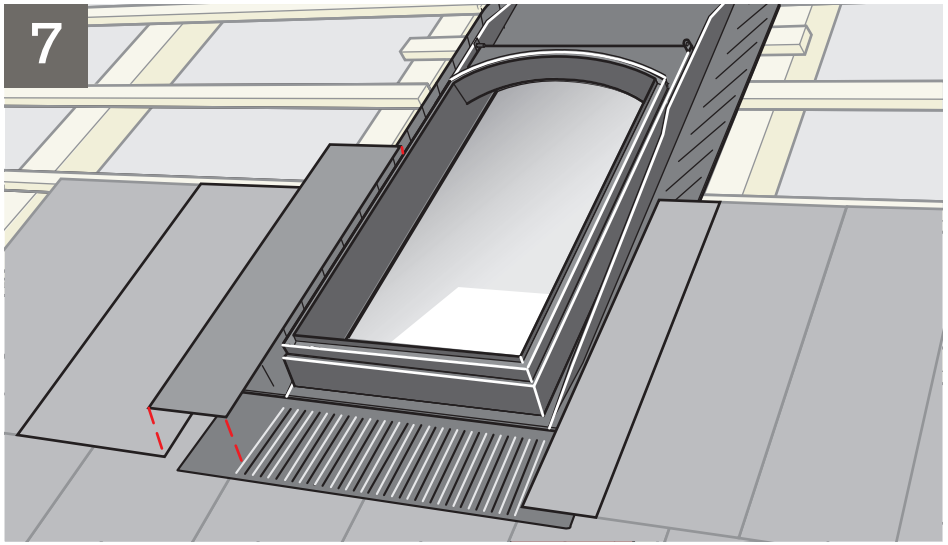

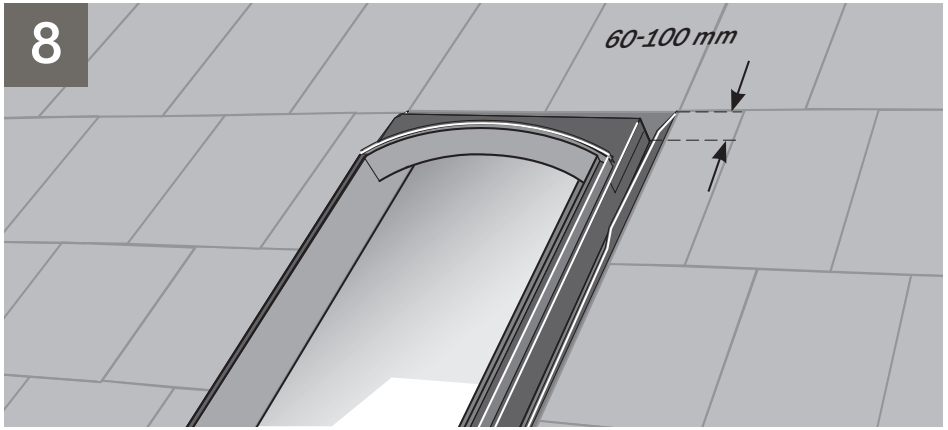
60-100 mm

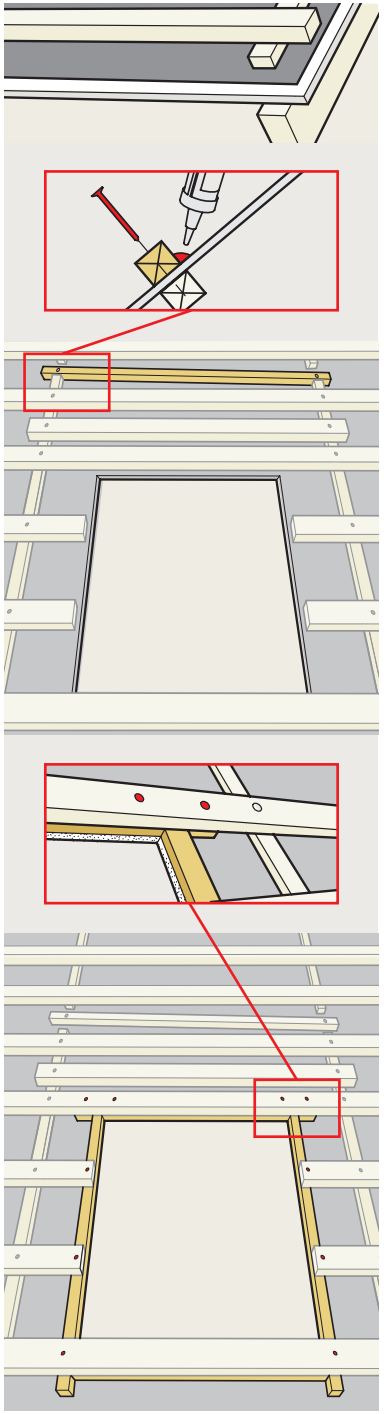

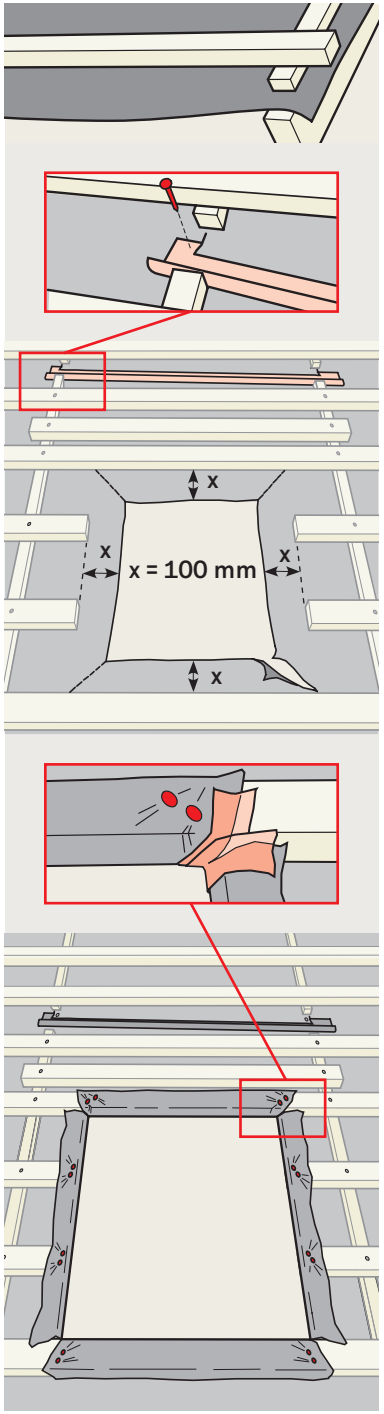
x
x
x = 100 mm
x
x

VELUX®

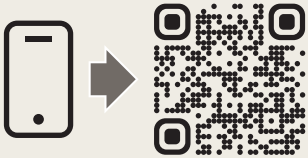

velux.com/contact

www.velux.com

INSTALLATION INSTRUCTIONS FOR ROOF WINDOW GVO ©2010, 2025 VELUX GROUP ®VELUX AND THE VELUX LOGO ARE REGISTERED TRADEMARKS USED UNDER LICENCE BY THE VELUX GROUP