VELUX manual, bottom-operated 3in1 roof window GPLS





Enjoy the best view with the panoramic VELUX 3in1 roof window GPLS with three windows in one frame. The elegant handles at the bottom of the two openable windows allow them to be opened up to 45° for an extra spacious balcony feeling.

- Refresh your home by opening one or two windows according to your needs
- Open the window outwards up to 45° to enjoy a panoramic view and a feeling of space.
- One frame module allows a simple well-known installation process with few components.
- Enjoy an extensive view to the outside and more daylight due to extra slim frame profiles
- Easily rotate the window 180° for safe cleaning of the outer glass from the inside.
- One-piece top cover and slim profile covers feature a very aesthetic integration in the roof.
- Adjust the bottom handle position to ventilate your home without opening the window.

CE

Creation date 19-11-2026 09:21:15 VRW Roof windows en-WW - Approved

Application guidance

The window can be installed in roof pitches between 15° and 55° (75°) to the horizontal.



VELUX 3in1 manual roof window GPLS opens outwards for an unobstructed, panoramic view. It consists of three windows, two openable, bottom-operated and one fixed, in one frame. This provides extra daylight and an extensive view while offering all the benefits of our bottom-operated windows. To benefit optimally from the wide view, we recommend an installation height that allows for a clear sight line to the outside from both a standing and seated position.

Available sizes and daylight area

The size overview shows the availability across the different glazing variants. Please note that the individual glazing variant may not be available in all the sizes shown.

	1880
1178	GPLS FFKF06 (1.41) [1.20]
1398	GPLS FFKF08 (1.74) [1.44]

All measurements are in mm. ( ) = Effective daylight area, m^2 [ ] = Geometric free area, m^2

Creation date 19-11-2026 09:21:15

Cross section dimensions

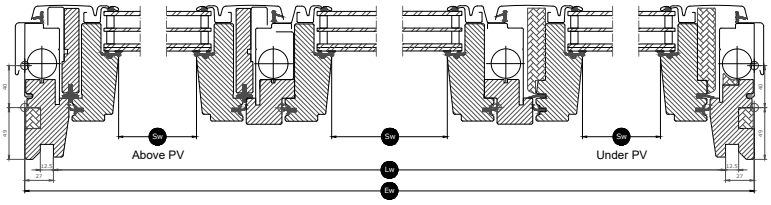

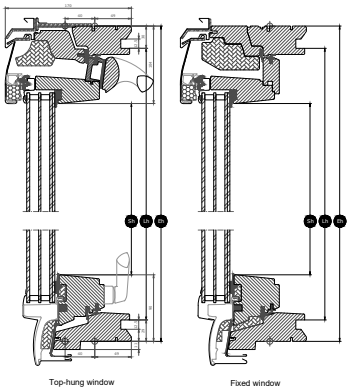

Width		FFKF--
Sw	Sash aperture width	481, 481, 481
Lw	Distance between lining grooves, width	1826
Ew	Exterior frame width	1880

Height		--06	--08
Sh	Sash aperture height	984	1204
Lh	Distance between lining grooves, height	1119	1339
Eh	Exterior frame height	1178	1398

Creation date 19-11-2026 09:21:15

Glazing features

	Glazing 66SG	Glazing 70	Glazing 76	Glazing 57
Solar protection	★★★☆	★★★☆	★★★★	★★★★
Security	★★☆☆	★★☆☆	★★☆☆	★★☆☆
Safety lamination	✓	✓	✓	✓
Toughened glass	✓	✓	✓	✓
UV filter	✓	✓	✓	✓
Rain noise reduction	✓	✓		✓
Easy-to-clean	✓			✓
Anti-dew	✓			

Glazing structure

Glazing variant	Glazing unit	Composition (from inside to outside)
Glazing 66SG	Triple-glazed	6.8 mm laminated float glass - 13 mm Argon - 3 mm heat strengthened glass - 13 mm Argon - 4 mm toughened glass
Glazing 70	Double-glazed	6.8 mm laminated float glass - 16 mm Argon - 4 mm toughened glass
Glazing 76	Double-glazed	6.8 mm laminated float glass - 16 mm Argon - 4 mm toughened glass
Glazing 57	Double-glazed	6.8 mm laminated float glass - 16 mm Argon - 6 mm toughened glass

Creation date 19-11-2026 09:21:15

Technical values for the window

Overview of technical values for the product, covering among other, CE marking in accordance with EN 14351-1.



Window characteristics	Performance			
	Glazing 66SG	Glazing 70	Glazing 76	Glazing 57
Thermal transmittance (U-value)	1.1 (08), 1.2 (06) W/(m²K)	1.3 (08), 1.4 (06) W/(m²K)	1.3 (08), 1.4 (06) W/(m²K)	1.3 (08), 1.4 (06) W/(m²K)
Light transmittance (τ,v)	0.62	0.68	0.62	0.61
Total solar energy transmittance (g-value)	0.44	0.46	0.30	0.30
Sound insulation (Rw)	36(-1,-5)	34(-1;-4)	34(-1;-4)	34(-1;-4)
Air permeability, [class]	4	4	4	4
External fire performance - British [class]	npd	npd	npd	npd
External fire performance - European [class]	npd	npd	npd	npd
Impact resistance [class]	3	3	3	3
Load-bearing capacity of safety devices	✓	✓	✓	✓
Reaction to fire [class]	C-s1,d2	C-s1,d2	C-s1,d2	C-s1,d2
Resistance to snow load	**	**	**	**
Resistance to wind load [class]	C3	C3	C3	C3
Water tightness [class]	9A	9A	9A	9A

Resistance to snow load = ** See glazing composition

NPD: No Performance Determined

Creation date 19-11-2026 09:21:15

Interior finish

Material Description	White-painted Finished with triple coat, white painted.
Colour code NCS, inner surface	S 0500-N
Colour code nearest RAL, inner surface	9003

Exterior covers

The availability of the variants listed below may change. For the most accurate and up to date information, please refer to the current product catalogue or price list.

Material Description	Aluminium, dark grey Dark grey	Untreated copper
Colour code NCS, outer surface	S 7500-N	No colour code
Colour code nearest RAL, outer surface	7043	No colour code

Cleaning and maintenance



To clean the outer glass surface from the inside, rotate sash and secure in cleaning position with barrel bolts. The fixed centre window can be cleaned outside by opening the right or left window.



VELUX repair and maintenance kits are available.

Guarantee period

Flashings and installation products



Flashings
Install the VELUX roof window in virtually any roofing material by using genuine VELUX flashing solutions. Our flashings are designed specifically for the exact size and shape of the roof windows to create perfect, watertight fit. Flashings can also be used to combine multiple roof windows.

Installation products
Ensure a proper installation and an air- and watertight connection between the window and roof with VELUX installation products. All installation products are designed to perfectly fit the roof window for a reliable and durable result.

Blinds, awnings and shutters

Complete the VELUX roof window installation with roller shutters and awning blinds for heat protection and interior blinds for light dimming or blackout. Choose from a wide range of manually operated or remote-controlled products that are made to fit the particular window type and size. Please contact your local VELUX sales company for more details about compatibility.

Further information

We reserve the right to make technical changes.

For more information on our products, please visit https://velux.com.

Creation date 19-11-2026 09:21:15