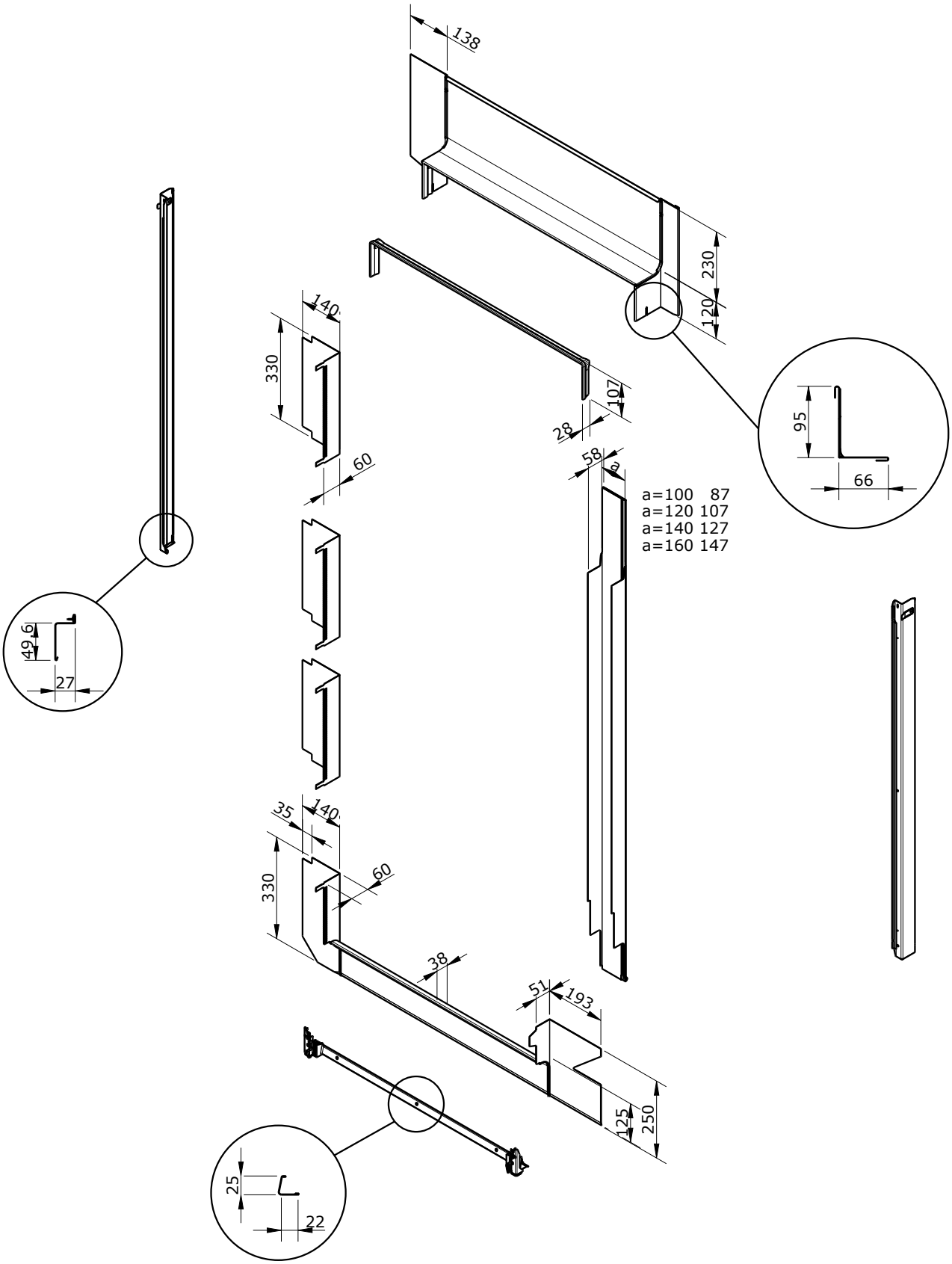

VELUX®	VELUX A/S Ådalsvej 99, DK-2970 Hørsholm	Scale 1:15	Approved date 2024 Jun 25	Approved by Carina Juul Jacobsen
Assembly		Size A4	General tolerance	Modified by M R Rohan LTTS
V22 EKL --01M isometric		Lifecycle Released	21	V22 EKL_--01M.ISO — Rev. 2

Iteration: 7

This drawing must not be copied, published or used in any other way without permission