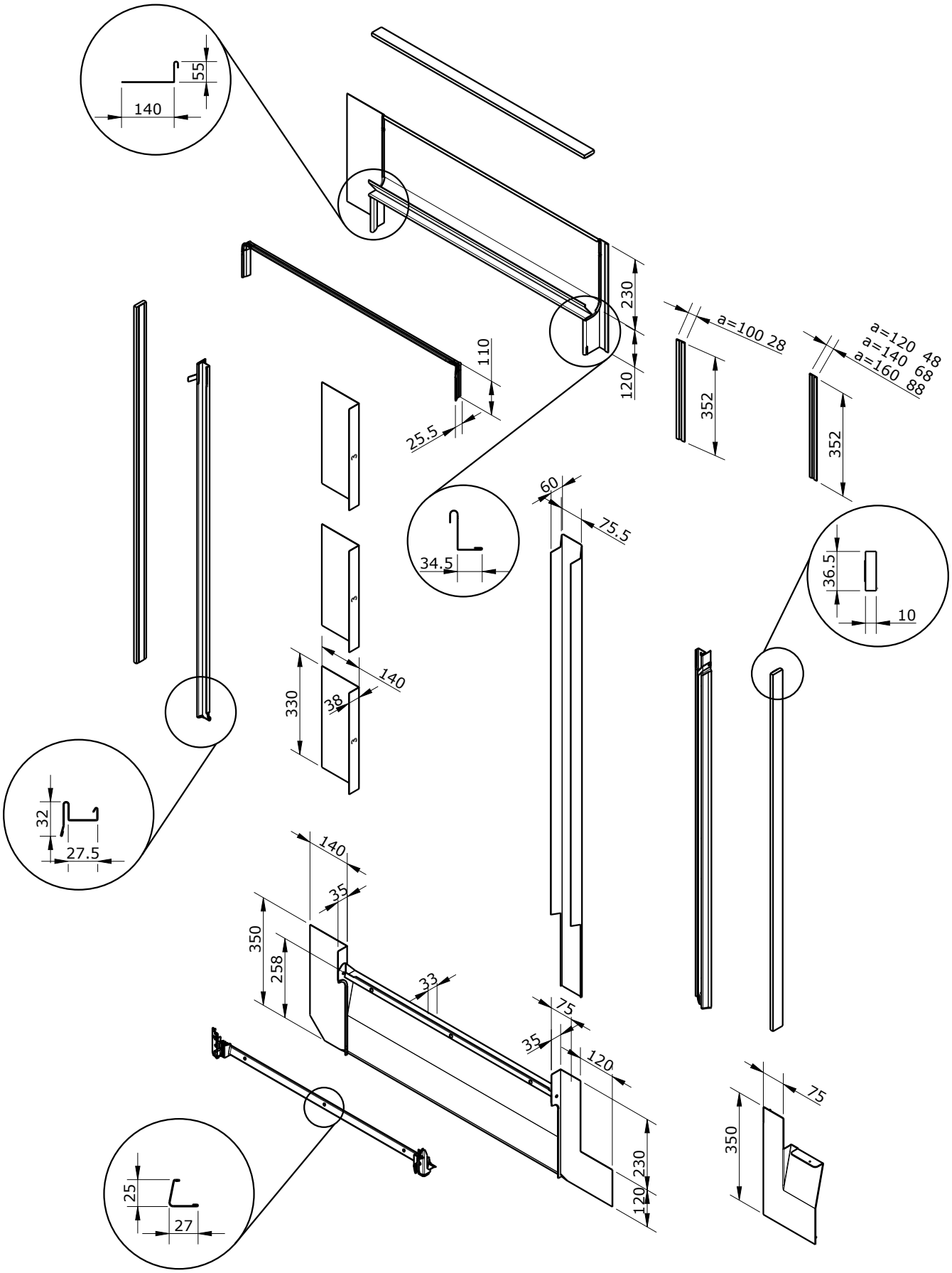

VELUX® VELUX A/S Ådalsvej 99, DK-2970 Hørsholm	Scale 1:15	Approved date 2024 Jan 04	Approved by Jan Brix Svendsen	
Assembly	Size A4	General tolerance	Modified by Harshad Thota LTTS	
V22 EKN --01M isometric	Lifecycle Released	21	V22 EKN_--01M.ISO	Rev. 2

Iteration: 9

This drawing must not be copied, published or used in any other way without permission