VELUX manually operated flat-roof window CVP 0073U

Glazing 73UT



10 Year Guarantee

0°–15°

Add natural daylight and fresh air to your home at a price that matches most budgets with the manually operated base unit CVP. The flat-roof window is easily operated using a practical telescopic rod. Offers all the basic benefits of a flat-roof window at an attractive price. Compatible with our acrylic and polycarbonate domes.

- Air out for a better indoor climate by using the ventilation opening.
- ThermoTechnologyTM insulation and double-glazed glazing increases overall energy-efficiency.
- Benefit from the extra energy-efficiency of the double-glazed glazing.
- A wide range of standard sizes makes it easy to find the window that best fits your room.
- Heat protection keeps your room cool and increases indoor comfort.
- The maintenance-free white PVC base unit reflects more natural light to brighten your room.
- Laminated security glazing for extra safety ensures the glass will not splinter in the event of breakage.

CE

Creation date 19-11-2026 09:39:18 VRW Roof windows en-GB - Approved

Application guidance

The manual-vented CVP base unit can be installed with all ISD Dome top units within the roof pitch range of 0° to 15°. Standard glass top unit ISG 2093 is not compatible. On rectangular sizes, the motor is placed on the short side and the base unit should be installed with the short side and rain sensor down the slope and hinges up the slope.



Easy, manual operation through a telescopic rod allows the VELUX manually-vented CVP base unit to open and ventilate, letting fresh air in whenever needed for a healthier indoor climate. Compatible only with the classic ISD Dome tops within the roof pitch range of 0° to 15°.

Available sizes and daylight area

Dimensions in the size diagram indicate the roof opening. For electrically operated windows, an additional clearance (typically 1 cm) must be provided on the side designated for cable installation, as specified in the applicable installation guidelines.

	600 mm	800 mm	900 mm	1000 mm	1200 mm
600 mm	CVP 060060 (0.19) [0.12]				
800 mm		CVP 080080 (0.40) [0.16]			
900 mm	CVP 060090 (0.32) [0.14]		CVP 090090 (0.54) [0.18]		
1000 mm				CVP 100100 (0.70) [0.2]	
1200 mm			CVP 090120 (0.76) [0.2]		CVP 120120 (1.07) [0.24]
1500				CVP 100150 (1.11) [0.23]	

All measurements are in mm. ( ) = Effective daylight area, m^2 [ ] = Geometric free area, m^2

Creation date 19-11-2026 09:39:18

Net Weight

Please note that a complete flat roof window consists of a top unit and a base unit supplied separately. The total weight of the complete solution must therefore be calculated by adding the unit weight of the top unit and the unit weight of the base unit, as specified in their respective data sheets.

	060060	060090	080080	090090	090120	100100	100150	120120
Net Weight (kg)	24.652	38.264	39.788	46.374	57.501	51.220	73.103	66.377

Creation date 19-11-2026 09:39:18

Cross section dimensions

Please note that the view of the cross section is from bottom to top.

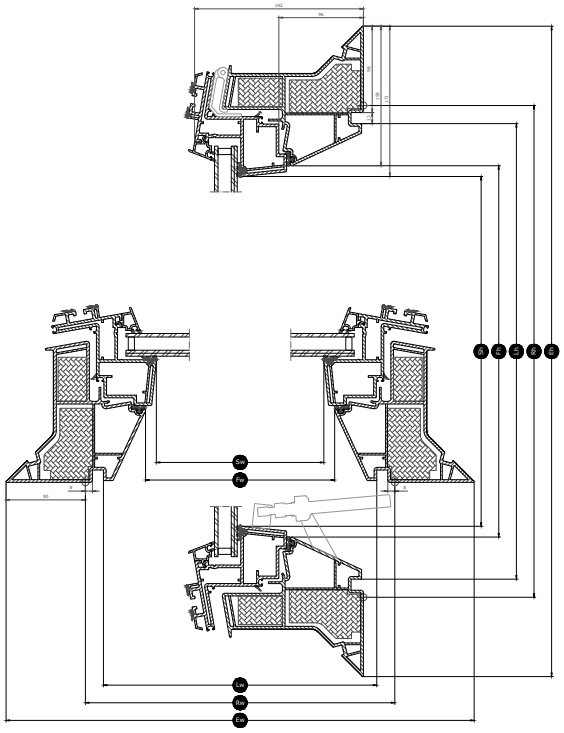

Width		060	080	090	100	120
Vw	Visible pane width					
Lw	Inside groove measure width	559	759	859	959	1159
Rw	Roof opening width	600	800	900	1000	1200
Iw	Inside sash measure width					
Ew	External frame width	780	980	1080	1180	1380

Height		060	080	090	100	120	150
Vh	Visible pane height						
Lh	Inside groove measure height	559	759	859	959	1159	1459
Rh	Roof opening height	600	800	900	1000	1200	1500
Ih	Inside sash measure height						
Eh	External frame height	780	980	1080	1180	1380	1680

Creation date 19-11-2026 09:39:18

Technical values

Overview of technical values for the product, covering among other, CE marking in accordance with EN 1873 or EAD 200062-00-0401.

Window characteristics	CVP Manual 73U + ISD 0000	CVP Manual 73U + ISD 0010	CVP Manual 73U + ISD 0100	CVP Manual 73U + ISD 0110
Air permeability	4	4	4	4
Thermal transmittance Urc,ref300 (CE-marked) (U-value)	0.87	0.87	0.87	0.87
Arc, ref300 (U-value transmission area)	3.4	3.4	3.4	3.4
Light transmittance (τ)	0.72	0.70	0.23	0.21
Sound insulation R_wdB [dB]	30	30	30	30
Total solar energy transmittance (g)	0.54	0.52	0.19	0.20
Ultraviolet transmittance (τuv)	0.05	0.05	0.05	0.05
Burglar resistance window	npd	npd	npd	npd
Frame factor	N/A	N/A	N/A	N/A
Air permeability	4	4	4	4
Reaction to fire	B-s1,d0	B-s1,d0	B-s1,d0	B-s1,d0
Bonding of cover glass (glass of top unit) [class]	N/A	N/A	N/A	N/A
External fire performance - European	npd	npd	npd	npd
External fire performance - British	npd	AA	npd	AA
Impact resistance	N/A	N/A	N/A	N/A
Impact resistance large soft body	SB 1200	SB 1200	SB 1200	SB 1200
Impact resistance small hard body	✓	✓	✓	✓
Rain noise	46 dB	50 dB	46 dB	50 dB
Resistance to downward loads	DL 2500	DL 2500	DL 2500	DL 2500
Resistance to fire	npd	npd	npd	npd
Resistance to snow load	N/A	N/A	N/A	N/A
Resistance to upward load	UL 1500	UL 1500	UL 1500	UL 1500
Resistance to wind load	N/A	N/A	N/A	N/A
Water tightness	✓	✓	✓	✓

NPD: No performance determined

Creation date 19-11-2026 09:39:18

Glazing structure

Glazing unit	Variant composition
Double-glazed	6.8 mm laminated float glass - 14,5 mm Argon - 4 mm float glass

Blinds and awnings

Complete your VELUX flat roof window with an anti-heat blind for heat protection. Due to the spindle drive, it's not possible to fit interior blinds on VELUX manually operated flat-roof window CVP 0073U.

Compatibility

The manually vented base unit CVP is compatible with an acrylic or polycarbonate dome top unit ISD in either clear or opaque finish.
Installation accessories: Extension kerb ZCE 0015/1015, securing kit for roofing felt ZZZ 210 and lining LSF 2000.
Compatibility with blinds: Solar-powered anti-heat blind MSG.

Further information

We reserve the right to make technical changes.

For more information on our products, please visit https://www.velux.co.uk or https://www.velux.ie.

Creation date 19-11-2026 09:39:18