VELUX flat-roof smoke ventilation window CSP

Glazing 73FQV

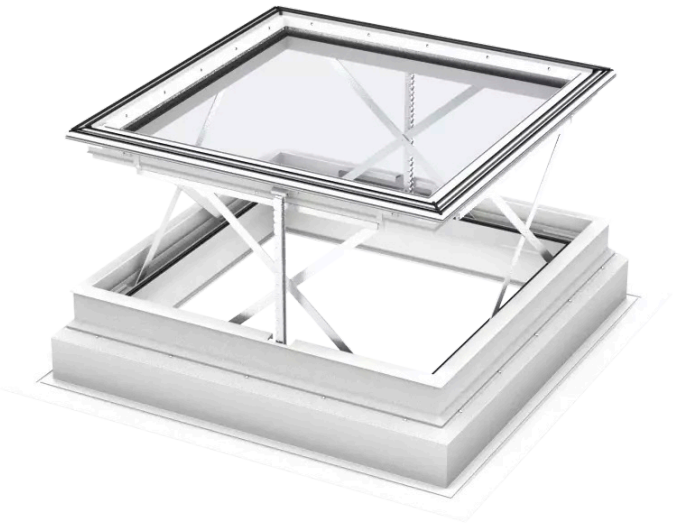



The flat-roof smoke ventilation window CSP will automatically open in case of fire and meets all relevant EU legislative requirements. The window can be opened for fresh air when ventilation is needed. A burglar-proof construction provides additional security and a laminated inner pane prevents glass from splintering in the event of breakage.

- Automatically opens in case of fire in accordance with EU legislative requirements.
- Easily open your VELUX electric flat-roof window for fast access to fresh, outside air.
- Heavy-duty scissor opening mechanism is designed for many years of reliable operation.
- Improve your overall comfort with the low-energy double-glazed glazing with two energy coatings.
- Enjoy the security of our top-rated security glazing, which provides class 2 burglary resistance.
- Tilted interior frame design increases the amount of daylight that enters your room.
- Automatically opens in case of fire, in accordance with EU legislation, and can also be opened via a ventilation switch to let in fresh air.

CE

Creation date 19-11-2026 10:00:04 VRW Roof windows en-WW - Approved

Application guidance

The CSP electric smoke ventilation base unit can be installed with all ISD Dome top units within the roof pitch range of 0° to 15°. ISG 2093 Standard glass top unit is not compatible.



The CSP flat roof smoke ventilation will automatically open in case of fire and meets all relevant EU legislative requirements for an NSHEV. The window provides the same amount of daylight as our electric-vented CVP and fixed CFP flat roof windows and it can also be opened for comfort ventilation when fresh air is needed. A burglar-proof secure construction provides additional protection and a laminated inner pane prevents glass from splintering in the event of breakage. An optional rain sensor automatically closes the window in the event of rain for additional peace of mind. Compatible with all ISD Dome top units within the roof pitch range of 0° to 15°. ISG 2093 Standard glass top unit is not compatible.

Available sizes and daylight area

Dimensions in the size diagram indicate the roof opening. For electrically operated windows, an additional clearance (typically 1 cm) must be provided on the side designated for cable installation, as specified in the applicable installation guidelines.

	1000 mm	1200 mm
1000 mm	CSP 100100 (0.70) [0.27]	
1200 mm		CSP 120120 (1.07) [0.41]

All measurements are in mm. ( ) = Effective daylight area, m^2 [ ] = Geometric free area, m^2

Creation date 19-11-2026 10:00:04

Net Weight

Please note that a complete flat roof window consists of a top unit and a base unit supplied separately. The total weight of the complete solution must therefore be calculated by adding the unit weight of the top unit and the unit weight of the base unit, as specified in their respective data sheets.

	100100	120120
Net Weight (kg)	85.954	124.115

Cross section dimensions

Please note that the view of the cross section is from bottom to top

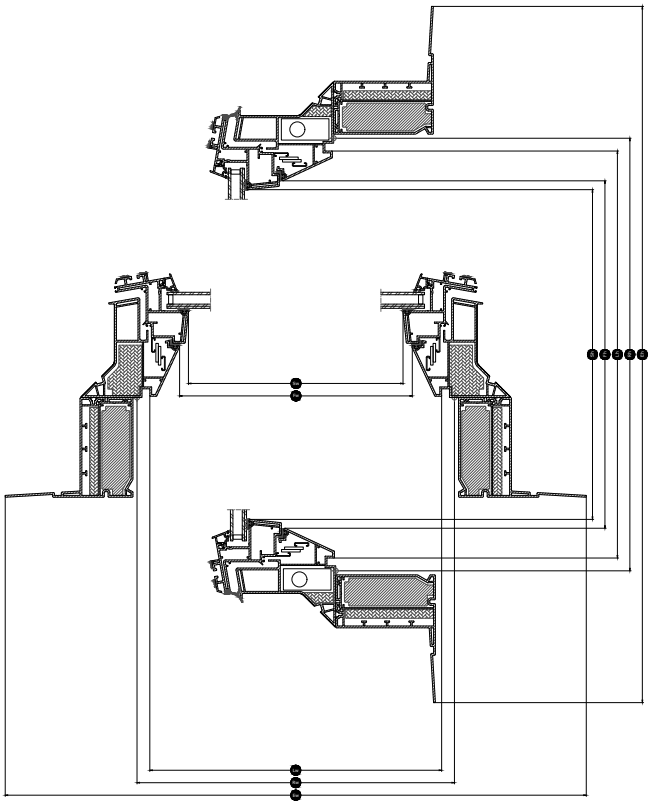

Width		100	120
Vw	Visible glazing width		
Lw	Inside groove measure width	959	1159
Rw	Roof opening	1000	1200
Iw	Inside sash measure width		
Ew	Exterior frame width	1423	1623

Height		100	120
Vh	Visible glazing height		
Lh	Inside groove measure height	959	1159
Rh	Roof opening	1000	1200
Ih	Inside sash measure height		
Eh	Exterior frame height	1423	1623

Creation date 19-11-2026 10:00:04

Technical values

Overview of technical values for the product, covering among other, CE marking in accordance with EN 1873 and EN 12101-2.

Window characteristics	CSP 73Q- + ISD 0000	CSP 73Q- + ISD 0010	CSP 73Q- + ISD 0100	CSP 73Q- + ISD 0110
Air permeability, [class]	4	4	4	4
Thermal transmittance Urc,ref300 (CE-marked) (U-value)	0.99	0.99	0.99	0.99
Arc, ref300 (U-value transmission area)	3.4	3.4	3.4	3.4
Light transmittance (τ,v) (τ)	0.72	0.70	0.25	0.26
Sound insulation (Rw) R_wdB [dB]	33	33	33	33
Total solar energy transmittance (g-value) (g)	0.53	0.50	0.20	0.23
Ultraviolet transmittance (τ,uv) (τuv)	0.05	0.05	0.05	0.05
Burglar resistance window [class]	RC2	RC2	RC2	RC2
Frame factor	N/A	N/A	N/A	N/A
Air permeability, [class]	4	4	4	4
Reaction to fire [class]	B-s1,d0	B-s1,d0	B-s1,d0	B-s1,d0
Bonding of cover glass (glass of top unit) [class]	N/A	N/A	N/A	N/A
External fire performance - European [class]	npd	npd	npd	npd
External fire performance - British [class]	npd	AA	npd	AA
Impact resistance [class]	N/A	N/A	N/A	N/A
Impact resistance large soft body [class]	SB 1200	SB 1200	SB 1200	SB 1200
Impact resistance small hard body [class]	✓	✓	✓	✓
Rain noise (Lia)	47 dB	51 dB	47 dB	51 dB
Resistance to downward loads	DL 2500	DL 2500	DL 2500	DL 2500
Resistance to fire [class]	npd	npd	npd	npd
Resistance to snow load	N/A	N/A	N/A	N/A
Resistance to upward load	UL 1500	UL 1500	UL 1500	UL 1500
Resistance to wind load [class]	N/A	N/A	N/A	N/A
Water tightness [class]	✓	✓	✓	✓

NPD: No Performance Determined

Creation date 19-11-2026 10:00:04

Glazing structure

Glazing unit	Composition (from inside to outside)
Double-glazed	7.5 mm laminated float glass - 14,5 mm Argon - 4 mm float glass

Blinds and awnings

If there is a need for heat protection, our solar-powered anti-heat blind MSG can be installed on the CSP smoke ventilation flat-roof window. However, this depends on local regulation and must be checked locally.

Compatibility

The electrically vented base unit for smoke ventilation CSP is compatible with an acrylic or polycarbonate dome top unit ISD in either clear or opaque finish.
Installation accessories: Securing kit for roofing felt ZZZ 210 and lining LSF 2000.
Compatibility with blinds: Solar-powered anti-heat blind MSG (depends on regulation).

Further information

We reserve the right to make technical changes.

For more information on our products, please visit https://velux.com.