VELUX flat-roof exit window CXP

Glazing 73FQV





The manually operated flat-roof exit window CXP opens extra wide to provide easy access to the roof. A laminated inner pane prevents glass from splintering in the event of breakage. Available with an acrylic and polycarbonate dome. The flat-roof exit window meets all relevant EU legislative requirements.

- Extra-large opening lets you enjoy easy access to the roof and an additional fire escape.
- Improve your overall comfort with the low-energy double-glazed glazing with two energy coatings.
- Tilted interior frame design increases the amount of daylight that enters your room.
- The maintenance-free white PVC base unit reflects more natural light to brighten your room.
- Designed to minimise condensation, our flat-roof windows maintain clear views to the outside.
- Repairs can be performed without replacing the entire window thanks to the modular design.

CE

Creation date 19-11-2026 10:52:39 VRW Roof windows en-WW - Approved

Application guidance

The CXP manual crafstman's exit base unit can be installed with all ISD Dome top units within the roof pitch range of 0° to 15°. ISG 2093 Standard glass top unit is not compatible. The CXP manual base unit should be installed with the hinges up the slope.



The CXP manually operated flat roof craftsman's exit opens extra wide to provide safe and convenient roof access for service and maintenance tasks. It ensures easy access to the roof fully in line with relevant EU legislative requirements, while the laminated inner pane prevents glass from splintering in the event of breakage for extra safety and peace of mind. Compatible with all ISD Dome top units within the roof pitch range of 0° to 15°. ISG 2093 Standard glass top unit is not compatible.

Available sizes and daylight area

Dimensions in the size diagram indicate the roof opening. For electrically operated windows, an additional clearance (typically 1 cm) must be provided on the side designated for cable installation, as specified in the applicable installation guidelines.

	900 mm	1000 mm	1200 mm
1000 mm		CXP 100100 (0.70) [0.2]	
1200 mm	CXP 090120 (0.76) [0.2]		CXP 120120 (1.07) [0.24]

All measurements are in mm. ( ) = Effective daylight area, m^2 [ ] = Geometric free area, m^2

Creation date 19-11-2026 10:52:39

Net Weight

Please note that a complete flat roof window consists of a top unit and a base unit supplied separately. The total weight of the complete solution must therefore be calculated by adding the unit weight of the top unit and the unit weight of the base unit, as specified in their respective data sheets.

	090120	100100	120120
Net Weight (kg)	66.945	62.273	78.537

Cross section dimensions

Please note that the view of the cross section is from bottom to top

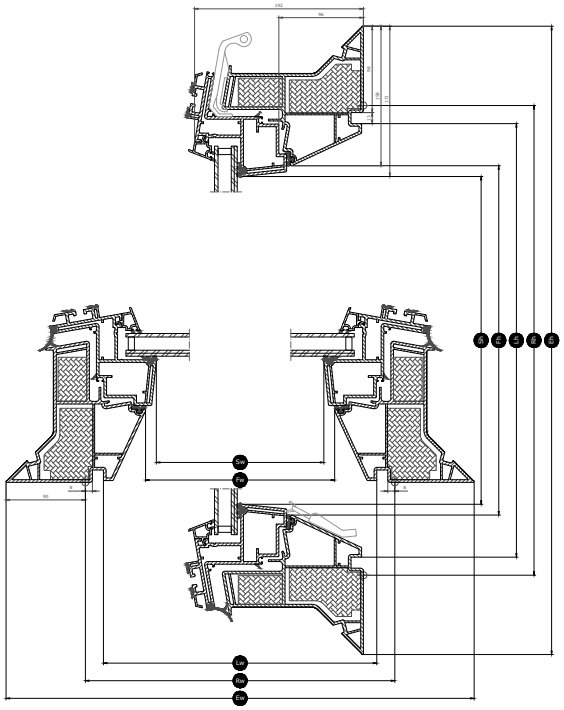

Width		090	100	120
Vw	Visible glazing width			
Lw	Inside groove measure width	859	959	1159
Rw	Roof opening	900	1000	1200
Iw	Inside sash measure width			
Ew	Exterior frame width	1080	1180	1380

Height		100	120
Vh	Visible glazing height		
Lh	Inside groove measure height	959	1159
Rh	Roof opening	1000	1200
Ih	Inside sash measure height		
Eh	Exterior frame height	1180	1380

Creation date 19-11-2026 10:52:39

Technical values

Overview of technical values for the product, covering among other, CE marking in accordance with EN 1873 or EAD 200062-00-0401.

Window characteristics	CXP 73Q- + ISD 0000	CXP 73Q- + ISD 0010	CXP 73Q- + ISD 0100	CXP 73Q- + ISD 0110
Air permeability, [class]	4	4	4	4
Thermal transmittance Urc,ref300 (CE-marked) (U-value)	0.86	0.86	0.86	0.86
Arc, ref300 (U-value transmission area)	3.4	3.4	3.4	3.4
Light transmittance (τ,v) (τ)	0.72	0.70	0.25	0.26
Sound insulation (Rw) R_wdB [dB]	36	36	36	36
Total solar energy transmittance (g-value) (g)	0.53	0.50	0.20	0.23
Ultraviolet transmittance (τ,uv) (τuv)	0.05	0.05	0.05	0.05
Burglar resistance window [class]	npd	npd	npd	npd
Frame factor	N/A	N/A	N/A	N/A
Air permeability, [class]	4	4	4	4
Reaction to fire [class]	B-s1,d0	B-s1,d0	B-s1,d0	B-s1,d0
Bonding of cover glass (glass of top unit) [class]	N/A	N/A	N/A	N/A
External fire performance - European [class]	npd	npd	npd	npd
External fire performance - British [class]	npd	AA	npd	AA
Impact resistance [class]	N/A	N/A	N/A	N/A
Impact resistance large soft body [class]	SB 1200	SB 1200	SB 1200	SB 1200
Impact resistance small hard body [class]	✓	✓	✓	✓
Rain noise (Lia)	50 dB	53 dB	50 dB	53 dB
Resistance to downward loads	DL 2500	DL 2500	DL 2500	DL 2500
Resistance to fire [class]	npd	npd	npd	npd
Resistance to snow load	N/A	N/A	N/A	N/A
Resistance to upward load	UL 1500	UL 1500	UL 1500	UL 1500
Resistance to wind load [class]	N/A	N/A	N/A	N/A
Water tightness [class]	✓	✓	✓	✓

NPD: No Performance Determined

Creation date 19-11-2026 10:52:39

Glazing structure

Glazing unit	Composition (from inside to outside)
Double-glazed	7.5 mm laminated float glass - 14,5 mm Argon - 4 mm float glass

Blinds and awnings

Compatibility

The manually operated base unit CXP is compatible with an acrylic or polycarbonate dome top unit ISD in either clear or opaque finish.
Installation accessories: Extension kerb ZCE 0015/1015, securing kit for roofing felt for roofing felt ZZZ 210 and lining LSF 2000.

Further information

We reserve the right to make technical changes.

For more information on our products, please visit https://velux.com.

Creation date 19-11-2026 10:52:39