# VELUX flat-roof smoke ventilation window CSP

## Glazing 73FQV

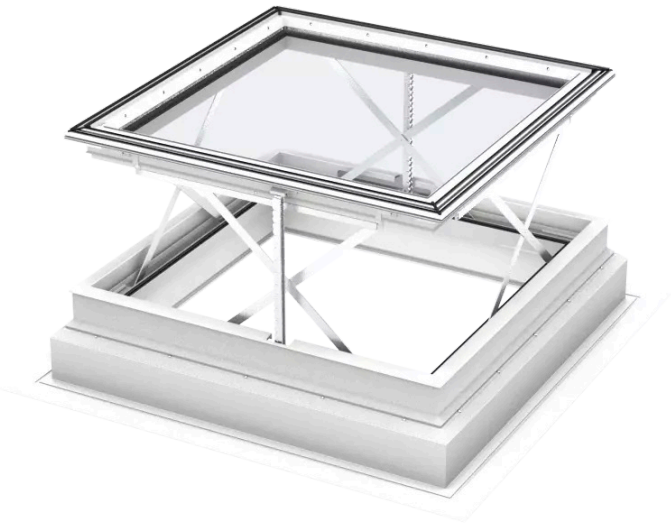

10 Year Guarantee

0°–15°

The flat-roof smoke ventilation window CSP will automatically open in case of fire and meets all relevant EU legislative requirements. The window can be opened for fresh air when ventilation is needed. A burglar-proof construction provides additional security and a laminated inner pane prevents glass from splintering in the event of breakage.

- Automatically opens in case of fire in accordance with EU legislative requirements.
- Easily open your VELUX electric flat-roof window for fast access to fresh, outside air.
- Heavy-duty scissor opening mechanism is designed for many years of reliable operation.
- Improve your overall comfort with the low-energy double-glazed glazing with two energy coatings.
- Enjoy the security of our top-rated security glazing, which provides class 2 burglary resistance.
- Tilted interior frame design increases the amount of daylight that enters your room.
- Automatically opens in case of fire, in accordance with EU legislation, and can also be opened via a ventilation switch to let in fresh air.

CE

Creation date 19-11-2026 09:36:51 VRW Roof windows en-GB - Approved

## Application guidance

The CSP electric smoke ventilation base unit can be installed with all ISD Dome top units within the roof pitch range of 0° to 15°. ISG 2093 Standard glass top unit is not compatible.



The CSP flat roof smoke ventilation will automatically open in case of fire and meets all relevant EU legislative requirements for an NSHEV. The window provides the same amount of daylight as our electric-vented CVP and fixed CFP flat roof windows and it can also be opened for comfort ventilation when fresh air is needed. A burglar-proof secure construction provides additional protection and a laminated inner pane prevents glass from splintering in the event of breakage. An optional rain sensor automatically closes the window in the event of rain for additional peace of mind. Compatible with all ISD Dome top units within the roof pitch range of 0° to 15°. ISG 2093 Standard glass top unit is not compatible.

## Available sizes and daylight area

Dimensions in the size diagram indicate the roof opening. For electrically operated windows, an additional clearance (typically 1 cm) must be provided on the side designated for cable installation, as specified in the applicable installation guidelines.

| | 1000 mm | 1200 mm |
|---|---|---|
| 1000 mm | CSP<br>100100<br>(0.70)<br>[0.27] | |
| 1200 mm | | CSP<br>120120<br>(1.07)<br>[0.41] |

All measurements are in mm. ( ) = Effective daylight area, $m^2$ [ ] = Geometric free area, $m^2$

# Net Weight

Please note that a complete flat roof window consists of a top unit and a base unit supplied separately. The total weight of the complete solution must therefore be calculated by adding the unit weight of the top unit and the unit weight of the base unit, as specified in their respective data sheets.

| | 100100 | 120120 |
|---|---|---|
| Net Weight (kg) | 85.954 | 124.115 |

# Cross section dimensions

Please note that the view of the cross section is from bottom to top.

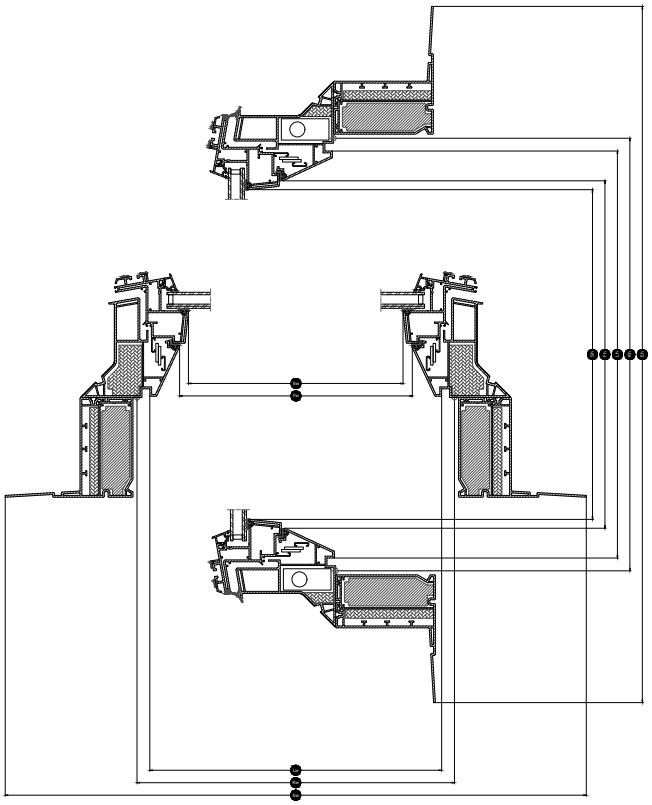

| Width | | 100 | 120 |
|---|---|---|---|
| Vw | Visible pane width | | |
| Lw | Inside groove measure width | 959 | 1159 |
| Rw | Roof opening width | 1000 | 1200 |
| Iw | Inside sash measure width | | |
| Ew | External frame width | 1423 | 1623 |

| Height | | 100 | 120 |
|---|---|---|---|
| Vh | Visible pane height | | |
| Lh | Inside groove measure height | 959 | 1159 |
| Rh | Roof opening height | 1000 | 1200 |
| Ih | Inside sash measure height | | |
| Eh | External frame height | 1423 | 1623 |

Creation date 19-11-2026 09:36:51

# Technical values

Overview of technical values for the product, covering among other, CE marking in accordance with EN 1873 and EN 12101-2.

| Window characteristics | CSP 73Q- + ISD 0000 | CSP 73Q- + ISD 0010 | CSP 73Q- + ISD 0100 | CSP 73Q- + ISD 0110 |
|---|---|---|---|---|
| Air permeability | 4 | 4 | 4 | 4 |
| Thermal transmittance Urc,ref300 (CE-marked) (U-value) | 0.99 | 0.99 | 0.99 | 0.99 |
| Arc, ref300 (U-value transmission area) | 3.4 | 3.4 | 3.4 | 3.4 |
| Light transmittance (τ) | 0.72 | 0.70 | 0.25 | 0.26 |
| Sound insulation $R_w$dB [dB] | 33 | 33 | 33 | 33 |
| Total solar energy transmittance (g) | 0.53 | 0.50 | 0.20 | 0.23 |
| Ultraviolet transmittance (τuv) | 0.05 | 0.05 | 0.05 | 0.05 |
| Burglar resistance window | RC2 | RC2 | RC2 | RC2 |
| Frame factor | N/A | N/A | N/A | N/A |
| Air permeability | 4 | 4 | 4 | 4 |
| Reaction to fire | B-s1,d0 | B-s1,d0 | B-s1,d0 | B-s1,d0 |
| Bonding of cover glass (glass of top unit) [class] | N/A | N/A | N/A | N/A |
| External fire performance - European | npd | npd | npd | npd |
| External fire performance - British | npd | AA | npd | AA |
| Impact resistance | N/A | N/A | N/A | N/A |
| Impact resistance large soft body | SB 1200 | SB 1200 | SB 1200 | SB 1200 |
| Impact resistance small hard body | ✓ | ✓ | ✓ | ✓ |
| Rain noise | 47 dB | 51 dB | 47 dB | 51 dB |
| Resistance to downward loads | DL 2500 | DL 2500 | DL 2500 | DL 2500 |
| Resistance to fire | npd | npd | npd | npd |
| Resistance to snow load | N/A | N/A | N/A | N/A |
| Resistance to upward load | UL 1500 | UL 1500 | UL 1500 | UL 1500 |
| Resistance to wind load | N/A | N/A | N/A | N/A |
| Water tightness | ✓ | ✓ | ✓ | ✓ |

NPD: No performance determined

Creation date 19-11-2026 09:36:51

**Glazing structure**

| Glazing unit | Variant composition |
|---|---|
| Double-glazed | 7.5mm laminated float glass - 14.5mm Argon - 4mm float glass |

## Blinds and awnings

If there is a need for heat protection, our solar-powered anti-heat blind MSG can be installed on the CSP smoke ventilation flat-roof window. However, this depends on local regulation and must be checked locally.

## Compatibility

The electrically vented base unit for smoke ventilation CSP is compatible with an acrylic or polycarbonate dome top unit ISD in either clear or opaque finish.
Installation accessories: Securing kit for roofing felt ZZZ 210 and lining LSF 2000.
Compatibility with blinds: Solar-powered anti-heat blind MSG (depends on regulation).

## Further information

We reserve the right to make technical changes.

For more information on our products, please visit https://www.velux.co.uk or https://www.velux.ie.